MITSUBISHI

SERVICE MANUAL

AM/FM CAR RADIO

MODEL : AR-2779SUMK-Y3, AR-2779SEK-3
PART NO. MB330339, MB249693

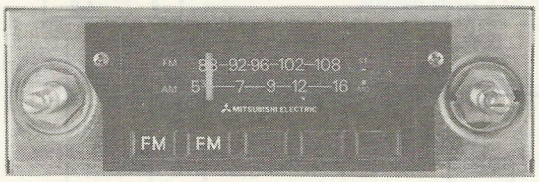

SPECIFICATIONS

Circuit System :	Superheterodyne
Tuning Range :	AM 525—1605KHz
	FM 88—108MHz
Intermediate Frequency :	AM 455KHz
	FM 10.7MHz
Sensitivity :	AM More than 26dB(μV)
Usable Sensitivity :	FM More than 21dB(μV)
SN Ratio :	AM More than 40dB
	FM More than 53dB
Stereo Separation :	More than 20dB
Stereo Switching Level :	Less than 20dB(μV)
Output Power :	Max. 6W
	THD 10% 4W
Output Inpedance :	4Ω
Power Source :	DC 13.2V Negative Ground Only
Current Consumption :	More than 1.5A
Size :	W 160mm (6—19/64")
	H 51mm (2")
	D 125mm (5")
Weight :	1.2kg (2.6 lb)

MITSUBISHI ELECTRIC AUSTRALIA PTY. LTD.

73-75 EPPING ROAD NORTH RYDE N.S.W. 2113 SYDNEY AUSTRALIA

ALIGNMENT PROCEDURES

1 AM (IF, RF) Alignment (Power Source Voltage DC 13.2V)

Procedures	Circuit	Signal generator connection	Signal generator frequency	Radio dial setting	Indicator connection	Adjustment paint	Remarks
1							
2	IF	Fig. 1	455 KHz	High freq. edge	Fig. 2	T2~T5	Adjust to get the maximum voltage and best symmetry on both sides
3							
4			1630 kHz	High freq. edge	"	VC3	Tune in
5			1400 KHz	1400 KHz	"	VC1, VC2	Adjust VC1, VC2 and get the maximum the output, voltage.
6	RF	Fig. 3	600 KHz	600 KHz	"	T1	Turn T1 gradually and SEEK the maximum sensitivity near 600 KHz.
7					"	Repeat procedures 5–6	
8			600 KHz 1000 KHz	Low freq. edge			Check the receiving frequency range

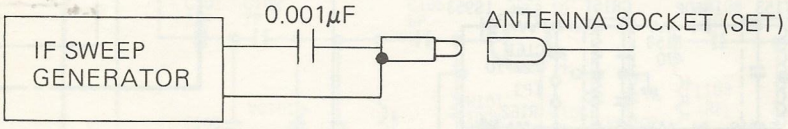

Fig. 1

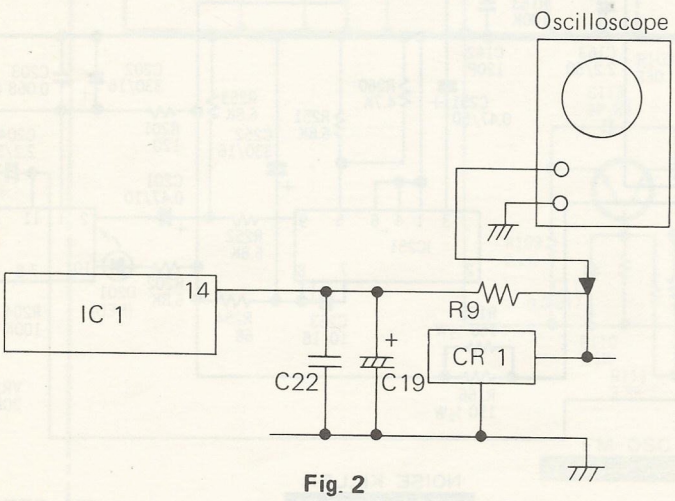

Fig. 2

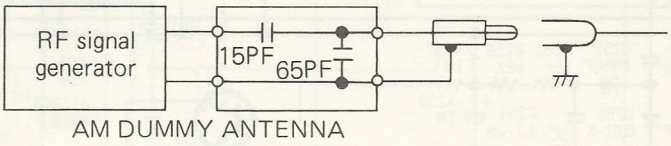

Fig. 3

2 FM Alignment (Power source voltage DC 13.2V.)

Step	Circuit	Connection		Signal generator frequency	Radio tuning	Adjustment paint	Remarks
		Input	Output				
1	IF	SMG output TP1 thru. 33 PF	SMG input TP3	10.7 MHz 40 dB (μV)	High freq. edge (TP2 and C161 open)	T101 T151, 152 VR151	Center freq. is determined by ceramic filter characteristic
2	Discriminator	SMG output TP1 thru. 33 PF	SMG input TP4	10.7 MHz 40 dB (μV)	High freq. edge (TP2 connected)	T153	Adjust T153 to make S-curve full in expansion and length.
3	RF	SSG output, Ant socket thru. dummy antenna (Fig. 4)	AC voltmeter speaker connector	108 MHz	High freq. edge (C161 connected)	VC103	Adjust output voltage (SPEAKER) for maximum.
4				88 MHz	Low freq. edge	–	
5				98 MHz	98 MHz	VC101, 102	
6				Repeat steps 3 to 5			
7	MPX		Freq. counter TP5		High freq. edge	VR202	19.0 ± 0.1 KHz
8	Separation	SSG output Ant socket thru. dummy antenna (Fig. 4)	AC voltmeter speaker connector	98 MHz 1 KHz, 30% mod.	98 MHz	VR201	Maximum separation
9						VR151	Limiting sensitivity 13～14 dB (μV)

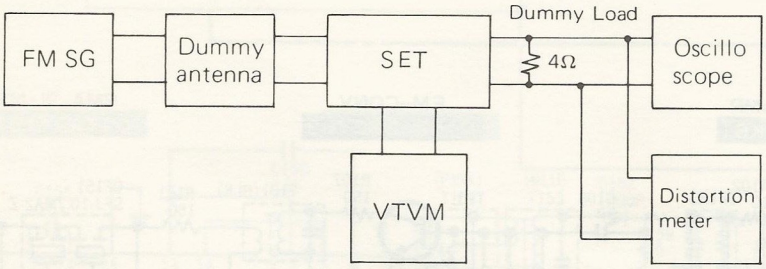

Fig. 4

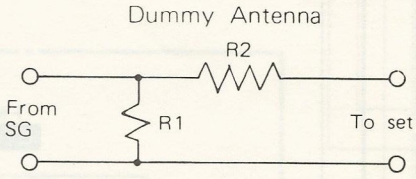

Open circuit R1: —— R2: 25Ω

Close circuit R1: 50Ω R2: 25Ω

* CF151 and CF152 use same color cord.

Center Frequency	RANK	CARE cord
10.70MHz ± 30KHz	A	RED
10.67MHz ± "	B	BLU
10.73MHz ± "	C	ORG
10.64MHz ± "	D	BLK
10.76MHz ± "	E	WHT

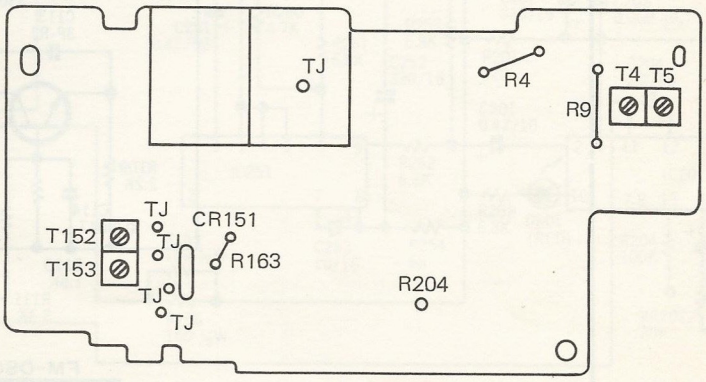

Tast point

SCHEMATIC DIAGRAM

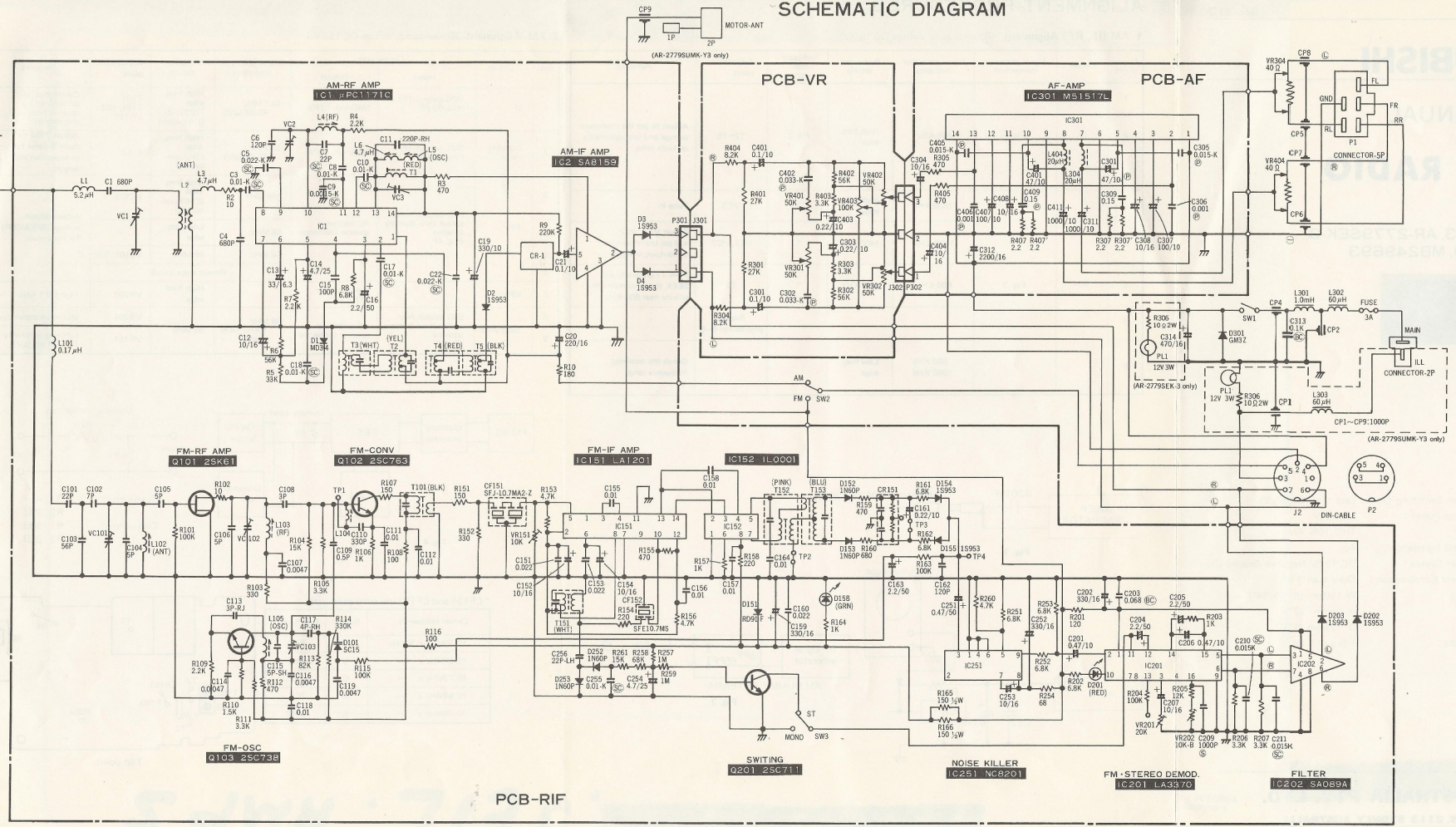

VOLTAGE READING

	IC1 μPC1171		
1	11.0V	8	2.5V
2	0.6	9	2.0
3	0.7	10	8.0
4	11.0	11	1.3
5	—	12	3.5
6	0	13	5.6
7	0	14	5.6

IC2 SA8159	
1	10.5V
2	6.0
3	0
4	0
5	5.4

IC151 LA1201			
1	2.4V	8	2.7V
2	2.7	9	0.9
3	0.6	10	1.8
4	1.7	11	0
5	1.1	12	4.5
6	0.5	13	4.2
7	0	14	4.5

Q101 2SK61	
D	7.0V
G	0
S	0

Q102 2SC763	
C	7.4V
B	1.3
E	0.8

Q103 2SC738	
C	7.2V
B	2.4
E	3.0

Q201 2SC711	
C	1.5V
B	—
E	0

IC152 ILO001	
1	0 V
2	4.2
3	4.5
4	1.1
5	5.8
6	0.5
7	5.8
8	7.0

IC251 NC8201	
1	0 V
2	3.0
3	3.0
4	0
5	0
6	0
7	12.0
8	12.5
9	4.0

IC201 LA3370			
1	11.5V	9	0 V
2	1.6	10	9.6
3	2.8	11	1.5
4	2.2	12	2.0
5	3.2	13	1.4
6	3.2	14	2.0
7	—	15	2.0
8	—	16	2.1

IC202 SAF089	
1	11.5V
2	—
3	3.2
4	0
5	11.5
6	—
7	3.2
8	0

IC301 M51517L			
1	14.2V	8	7.3V
2	—	9	0
3	1.25	10	13.5
4	3.3	11	3.3
5	13.5	12	1.25
6	0	13	—
7	7.3	14	14.2

NOTICE:

1. **Indication**
   - All resistors are ohms unless otherwise specified. (K = 10^3 ohm, M = 10^6 ohm).
   - All capacitors are microfarads unless otherwise specified. (P = 10^{-6} microfarad)
2. **Resistors**
   - Types: Carbon resistor: No mark; Solid resistor: (S) mark; Printed resistor: (PR) mark; Tip resistor: (TR) mark
   - Wattage: 1/4W. Other wattage will be indicated.
   - Tolerance

Mark	Tolerance
J	±5%
K	±10%

3. **Capacitors**
   - Types: Ceramic condenser: No mark; Semiconductor ceramic condenser: (BC) mark; Polyester film condenser: (G) mark; Styrol condenser: (S) mark; Tantalic condenser: (T) mark; Aluminum electrolytic condenser: (Al) mark; Tip condenser: (TP) mark
   - Tolerance

Mark	Tolerance	Mark	Tolerance
C	±0.25PF	M	±20%
D	±0.5PF	Z	+80% −20%
J	±5%	No mark	+100% −0
K	±10%		

4. **Voltage measured by**
   Voltage measured by D.C. voltmeter (120 KΩ/V DC) to chassis ground with no signal input (Source voltage 13.2V)
5. This circuit is subject to change for improvement without prior notice.
6. R307', 407': additional parts for efficiency.

PRINTED CIRCUIT BOARD (Pattern Side)

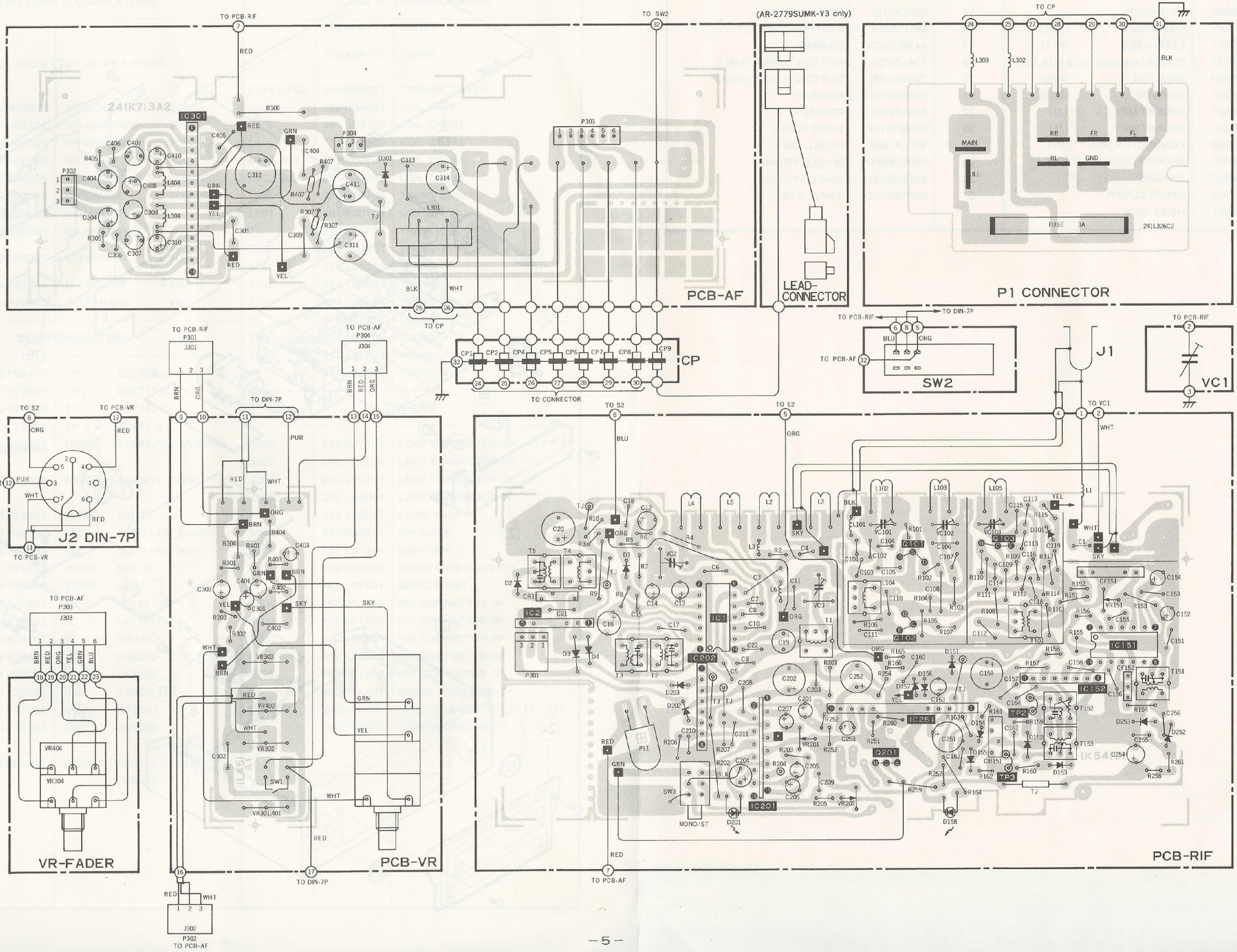

MECHANICAL PARTS LIST

AR-2779SEK-3 (1)
-2779SUMK-Y3 (2)

REF. No.	PART No.	DESCRIPTION	REF. No.	PART No.	DESCRIPTION
1	122L06205	VR-DOUBLE SHAFT	15	242L46502	LEAD-CONNECTOR 2P-1P (2)
2	129L08903	VR-FADER	16	590L55101	SHIELD-CASE
3	202L01301	C-TRIMMER (VC1)	17	641L03201	STOPPER CONNECTOR
4	253L00801	LAMP ASSY (PL1)	18	642M06803	DAMPER
5	295K08701	TUNER (Attached No. 2,6,19,&20)	19	704L06103	BUTTON TUNER (FM)
6	431M00601	SW-SLIDE (SW2)	20	704M18201	BUTTON TUNER (AM)
7	432L01301	SW-PUSH (SW3)	21	704M19701	KNOB-ST
8	449L00501	SOCKET-MPX (J2)	22	768L02801	POINTER
9	449L02501	SOCKET-ANT (J1)	23	768M10101	BACK PLATE
10	452L02506	CONNECTOR 2P-5P (P1)	24	943L41905	PANEL ASSY
11	459M01101	SHORT PLUG DIN-5P (P2)	25	590L55501	SHIELD-FRAME
12	560K06502	CHASSIS	26	591M29301	SHIELD-PLATE
13	590K13704	UPPER COVER	27	591M63101	TAP-PLATE
14	590L90501	HEAT SINK			

EXPLODED VIEW

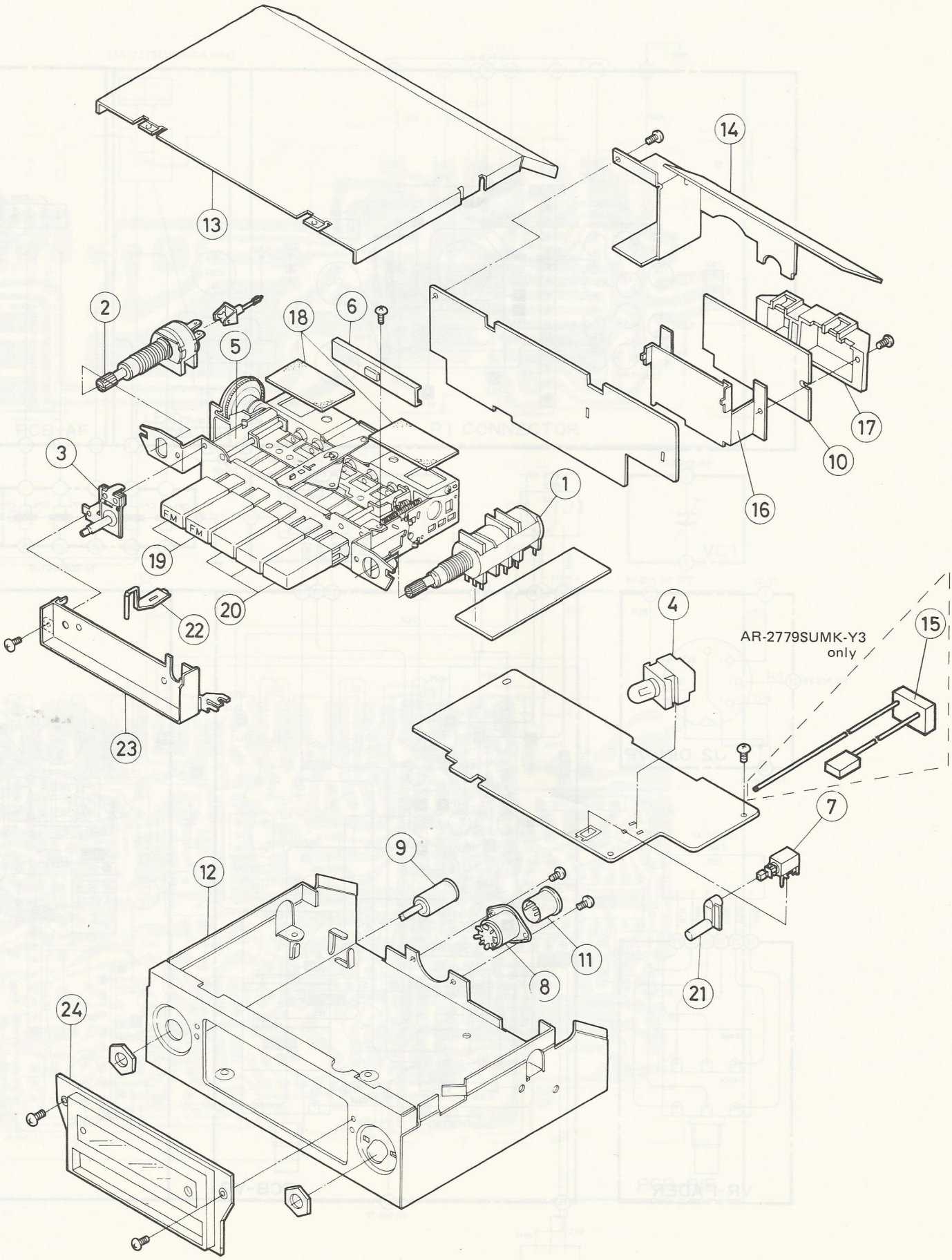

ELECTRICAL PARTS LIST

AR-2779SEK-3 (1)
-2779SUMK-Y3 (2)

REF. No.	PART No.	DESCRIPTION
RESISTORS & CAPACITORS		
VR301, 401, 302, 402, 303, 403, SW1	122 L 06205	VR-DOUBLE-SHAFT
VR202	127M03003	VR-SEMIFIXED 20kΩ
VR201	127M03102	VR-SEMIFIXED 20kΩ
VR151	127M03103	VR-SEMIFIXED 10kΩ
VR304, 404	129 L08903	VR-FADER 40Ω
CP1, 2, 4	141 P02001	C-CERAMIC 1000PF
CP5, 6, 7, 8	141 P02003	C-CERAMIC 1000PF
CR151	149 L00102	CR-MULTIPLE
CR1	149 L00201	CR-MULTIPLE
VC101, 102, 103	202 L00301	C-TRIMMER 10PF
VC1	202 L01301	C-TRIMMER 100PF
VC2, 3	202 P10401	C-TRIMMER 48PF
SEMICONDUCTORS		
Q103	260 P05403	TR 2SC738-C
Q201	260 P17502	TR 2SC711-E
Q102	260 P17603	TR 2SC763-C
Q101	260 P23702	TR 2SK61-0
D1	264 P00401	DIODE 1N34A/1K34A/MD34
D152, 153, 154, 155, 252, 253	264 P01306	DIODE 1N60P/2-1K261
D301	264 P13201	DIODE GM-3Z
D158	264 P14101	LED SLT-214B Green
D201	264 P14301	LED SLP-114B Red
D151	264 P21103	DIODE RD9.1F
D101	264 P29801	DIODE SC-15
IC1	266 P01201	IC μPC1171C
IC151	266 P30402	IC LA1201FM-C
IC301	266 P35101	IC M51517L
IC201	266 P78901	IC LA3370
IC2	267 P30301	HIC SA8159
IC152	267 P30502	HIC IL0001
IC251	267 P71002	HIC NC8201
IC202	267 P71103	HIC SAF089
D2, 3, 4, 154, 155, 202, 203	269M01201	DIODE 1S2076/1S2473 /1S953

REF. No.	PART No.	DESCRIPTION
COILS & TRANSFORMERS		
	295 K06607	TUNER (1)
	295 K08701	TUNER (2)
CF151, 152	296M00501	CERAMIC FILTER
L104	320 D04601	COIL TRAP
L3, 6	351 D02103	COIL CHOKE
L1	351 L00103	COIL CHOKE
L304, 404	351M00201	COIL CHOKE
L302, 303	351M00202	COIL CHOKE
L301	351 P00108	TRANS CHOKE
L101	361M00101	COIL-RF
T1	373M00101	TRANS-OSC
T101	374 L00201	TRANS- IF
T151	374 L00202	TRANS- 〃
T152	374 L00603	TRANS- 〃
T153	374 L00604	TRANS- 〃
T3	374 L01201	TRANS- 〃
T2	374 L01202	TRANS- 〃
T4	374 L01203	TRANS- 〃
T5	374 L01204	TRANS- 〃
OTHERS		
J304	242 K07102	LEAD CONNECTOR-3P
J303	242 K07504	LEAD CONNECTOR-6P
J301	242 L11207	LEAD CONNECTOR-3P
J302	242 L28001	LEAD CONNECTOR-3P
PL1	253 L00801	LAMP-ASSY
SW2	431M00601	SW-SLIDE
SW3	432 L01301	SW-PUSH
J2	449 L00501	SOCKET-MPX (DIN-7P)
J1	449 L02501	SOCKET-ANT
P304	452 D11103	PIN CONNECTOR-3P
P303	452 D11106	PIN CONNECTOR-6P
P302	452 L01601	PIN CONNECTOR-3P
P1	452 L02506	CONNECTOR 2P-5P
P301	452M01201	PIN CONNECTOR-3P
P2	459M01101	SHORT PLUG DIN-5P
MOROR -ANT	242L46502	LEAD-CONNECTOR 2P-1P (2)
	452M01603	PIN-CONNECTOR-1P