Car Stereo cassette player AC620A

Service
Service
Service

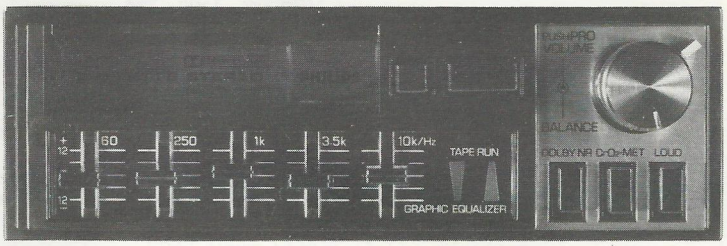

Service Manual

FOUR TRACK AUTO REVERS. CASSETTE PLAYER
WITH GRAPHIC EQUALISER

12 V

SPECIFICATIONS

NUMBER OF TRACKS	– 4 TRACKS – 2 CHANNELS.
TAPE CARTRIDGE	STEREO/MONAURAL COMPACT CASSETTE
TAPE SPEED	– 4.75 CM/SEC.
POWER OUTPUT	– 4 WATTS.
SPEAKER IMPEDANCE	– 4 OHMS.
POWER SUPPLY	– 12 VOLTS NEGATIVE TO EARTH.
CURRENT	– 1.5 AMP. (at 1 watt output).
SEMICONDUCTORS	8 IC's 6 Transistors 6 Diodes

Subject to modification
4802 725 170074

PHILIPS

REPLACEMENT PARTS LIST

Ref. No.	Description	Service Code
Resistors		
NOTE: All Resistors are standard values and tolerances unless specified otherwise.		
RV1, 2		4822 100 10024
RV3-12		4802 105 17168
RV13-15-S7		4802 102 17066
Semiconductors		
ICI	EA9083	4802 209 87521
IC2-3	LM1111	4802 209 87522
IC4	EA1005	4802 209 87523
IC5	DN6838	4802 209 87209
IC6	AN6248	4802 209 87466
IC7, 8	M51517L	4802 209 87493
TR1	ESC1847Q	4802 130 47432
TR2,3	2SD655-E	4822 130 41607
TR4,5	2SC1684-Q	4822 130 41532
TR6	2SB605L	4802 130 47442
D1-4	1S1555	4802 130 37033
D5	1S1885	4802 130 37036
D6, 7	LD-001YY (LED)	4802 130 37442
D8	RD4R7F-B (use BZX79 C4V7)	4822 130 30773
Miscellaneous Electrical		
A1	**P/B Head**	**4802 249** 47047
E1	Solenoid	4802 280 27024
M1	Motor	4802 361 27102
PL1, 2	Lamp. Dial	4802 134 47143
S1	Switch. Slide	4802 277 27124
S2, 3, 4	Switch. Push	4802 276 17121
S5	Switch. Leaf	4802 278 97078
S6	Switch. Leaf	4802 277 17029
S9	Switch. Micro	4802 271 37041
—	Fuse 5A	4802 253 47011

Ref. No.	Description	Service Code
Miscellaneous Mechanical		
10	Escutcheon	4802 459 57095
16	Button	4802 410 27449
17	Button	4802 410 27451
18	Button	4802 410 27452
44	Button	4802 410 27453
45	Knob	4802 410 17007
46	Knob	4802 413 17183
Cassette		
2	Spring	4802 492 37461
7	Spring	4802 492 37462
9	Spring	4802 492 37385
12	Spring	4802 492 37463
13	Roller	4802 520 37023
15	Spring	4802 492 37464
18-1	Belt	4802 358 37039
18-2	Belt	4802 358 37003
19	Flywheel	4802 528 67103
22	Spring	4802 492 37465
23	Pinchroller	4802 403 47089
24	Pinchroller	4802 403 47091
25	Spring	4802 492 37466
30	Slip mechanism	4802 402 37006
31	Gear	4802 528 17272
32	Roller	4802 520 37024
34	Roller	4802 520 37025
35	Spring	4802 492 37467
36	Gear	4802 528 17273
38	Spring	4802 492 37468
39	Gear	4802 522 27019
40	Gear	4802 522 27021
60	Spring	4802 492 37469
61	Spring	4802 492 37471
62	Spring	4802 492 37472
64	Roller	4802 520 37026
65	Spring	4802 492 37425
67	Spring	4802 492 37473
68	Roller	4802 520 37027

DOLBY LEVEL ALIGNMENT

NOTE: When aligning the Dolby NR Circuit, only gain adjustment is required. Switches should be set as follows:

Tape select — Normal
Dolby NR — Off
Loud — Off

Procedure:

1. Connect a VTVM as per illustration.
2. Using test cassette and a VTVM connected to test points 1 & 3 (right channel) or 2 & 3 (left channel) adjust VR1 and VR2 so that both channels **have the same output** within the range 580mV ± 60mV.

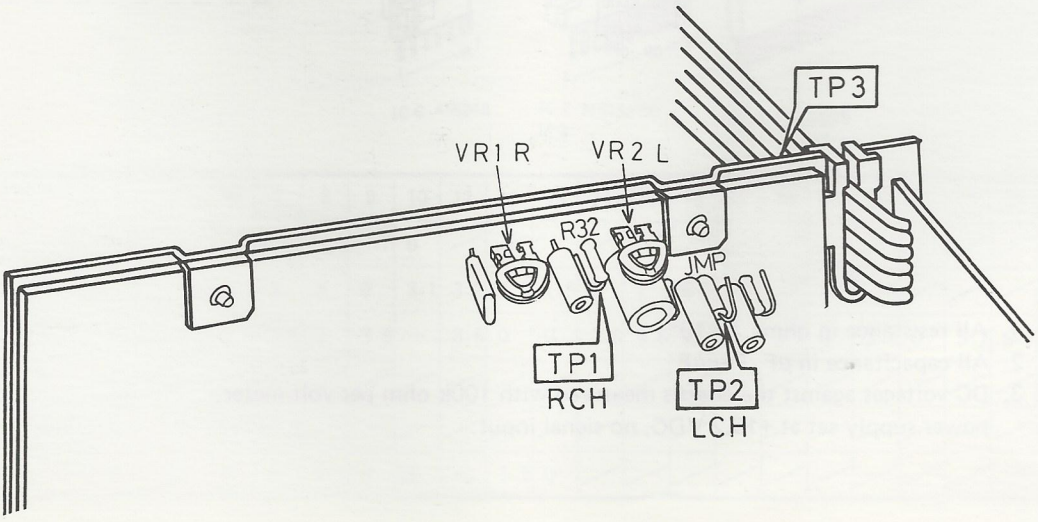

EXPLODED VIEW (CASSETTE DECK MDK-44/4)

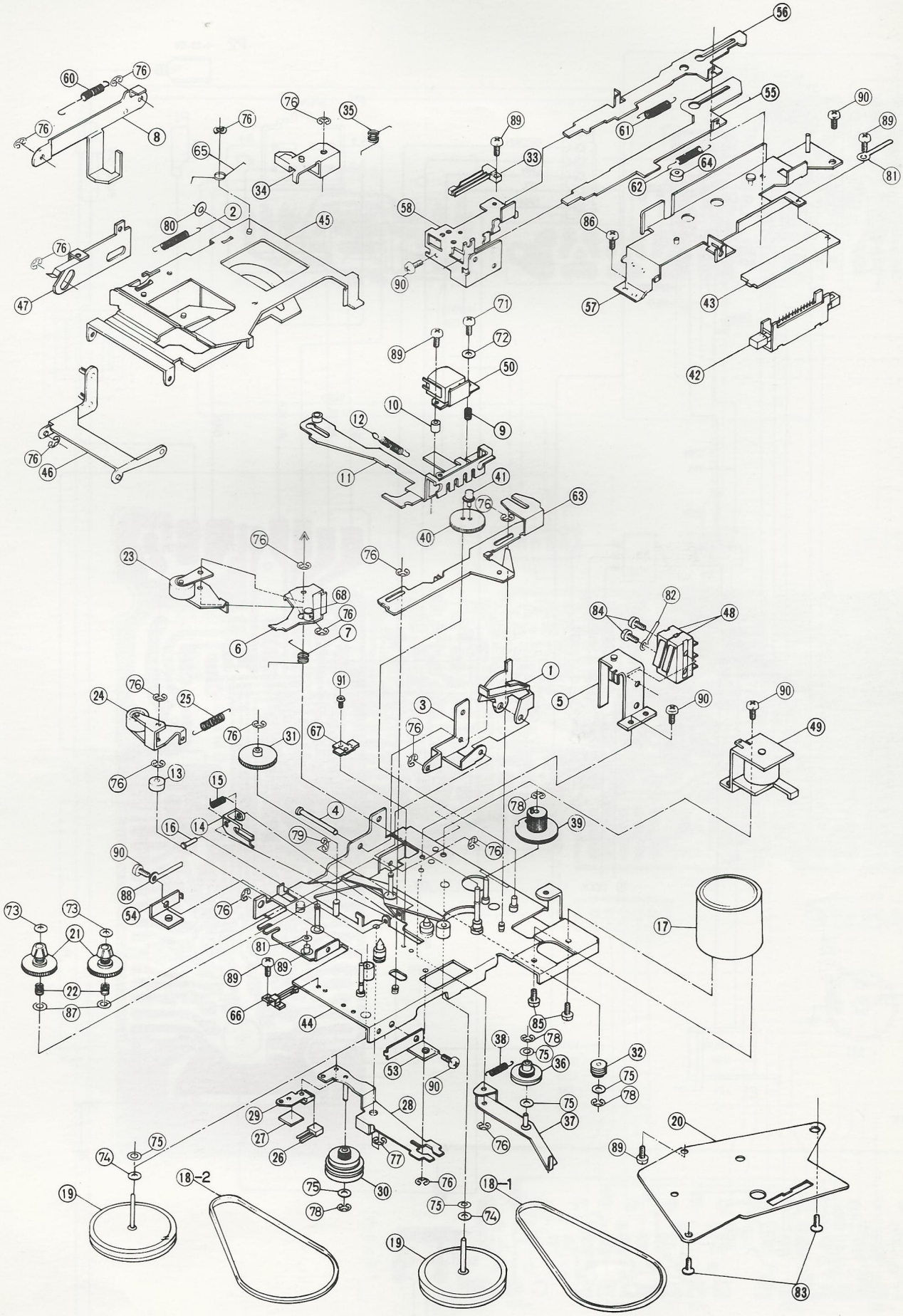

Fig. 8

EXPLODED VIEW

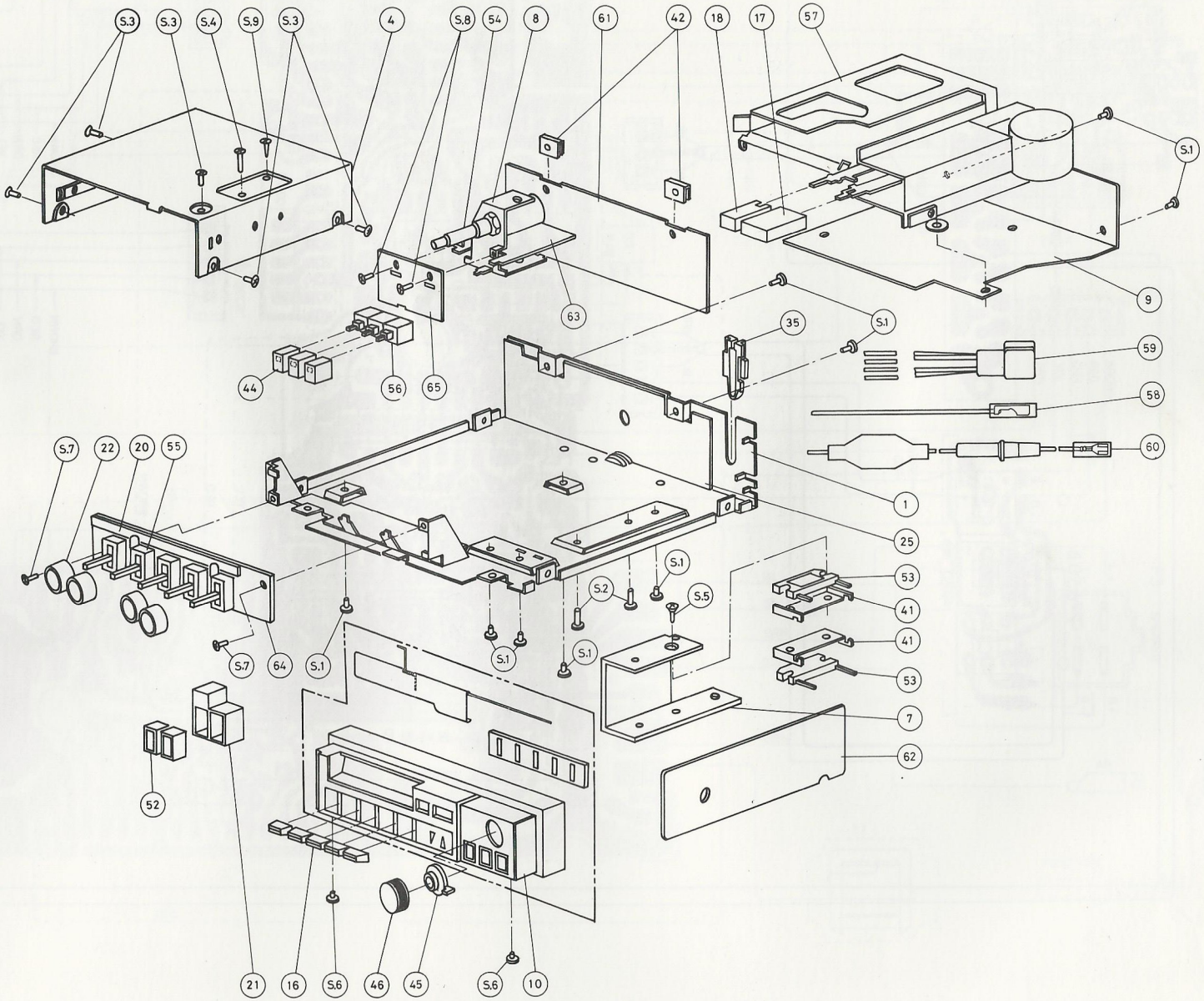

SCHEMATIC

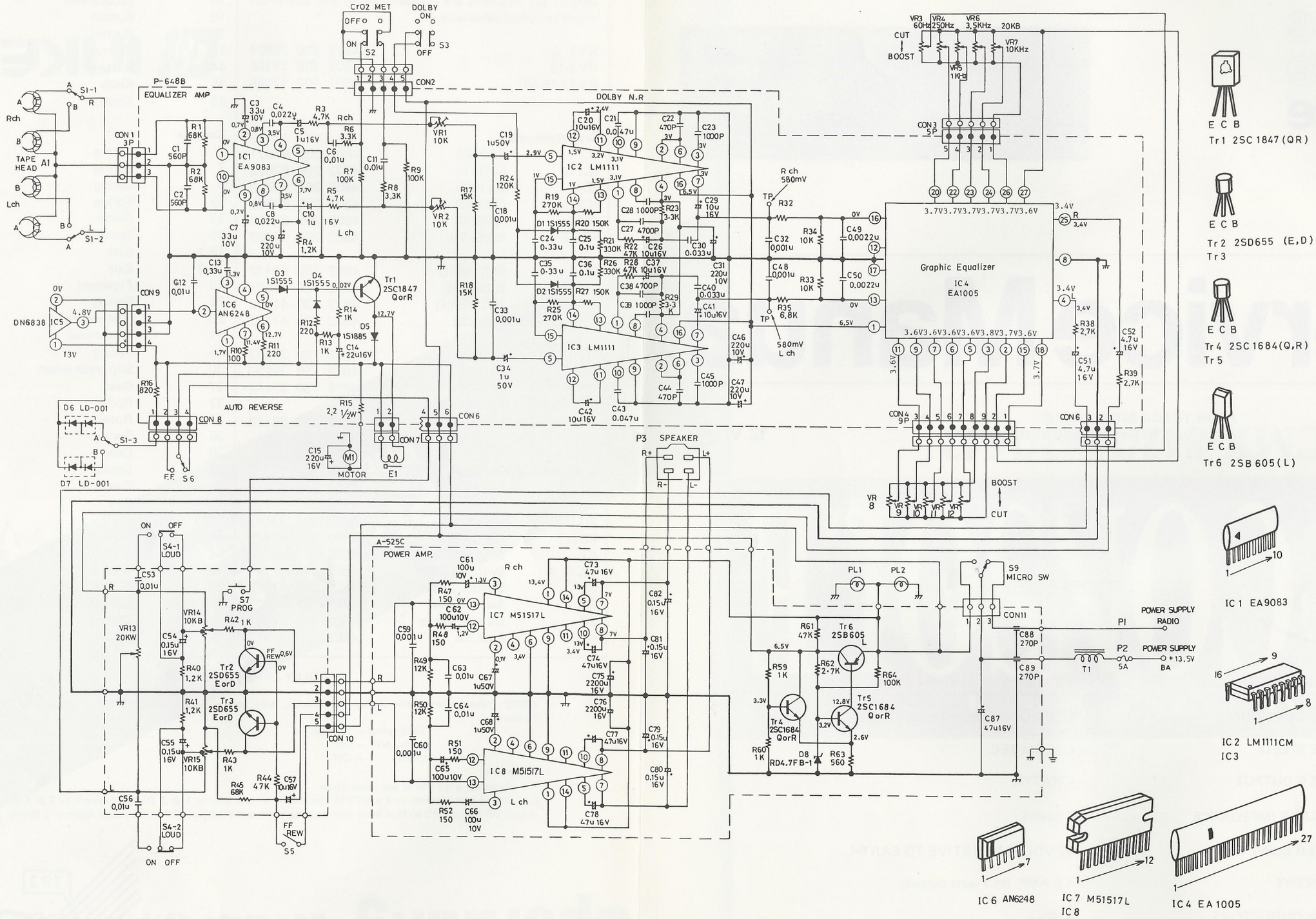

Fig. 1

NOTES:

1. All resistance in ohms, K=10^3
2. All capacitance in μF, P=$\mu\mu$F
3. DC voltages against the chassis measured with 100k ohm per volt meter, power supply set at +13.2 VDC, no signal input.

(Unit : V)

	1	2	3	4	5	6	7	8	9	10	11	12	13	14	15	16	17	18	19	20	21	22	23	24	25	26	27
IC 1	0	.7	.8	3.5	0	7.7	3.5	.8	.7	0	/	/	/	/	/	/	/	/	/	/	/	/	/	/	/	/	/
IC 2 IC 3	3.1	3	3	3	2.9	3	3	3	0	3.1	3.2	1.5	1.5	1	1	6.5	/	/	/	/	/	/	/	/	/	/	/
IC 4	6.5	3.7	3.8	3.4	3.6	3.6	3.6	0	3.6	—	3.6	0	0	3.6	3.6	0	0	3.7	0	3.7	0	3.7	3.7	3.7	3.4	3.7	3.6
IC 5	13	0	4.8	/	/	/	/	/	/	/	/	/	/	/	/	/	/	/	/	/	/	/	/	/	/	/	/
IC 6	1.7	4.8	1.3	0	0	12.7	11.4	/	/	/	/	/	/	/	/	/	/	/	/	/	/	/	/	/	/	/	/
IC 7 IC 8	13.4	.1	1.3	—	13	0	7	7	0	13	—	1.2	0	/	/	/	/	/	/	/	/	/	/	/	/	/	/

WIRING ON PC BOARDS

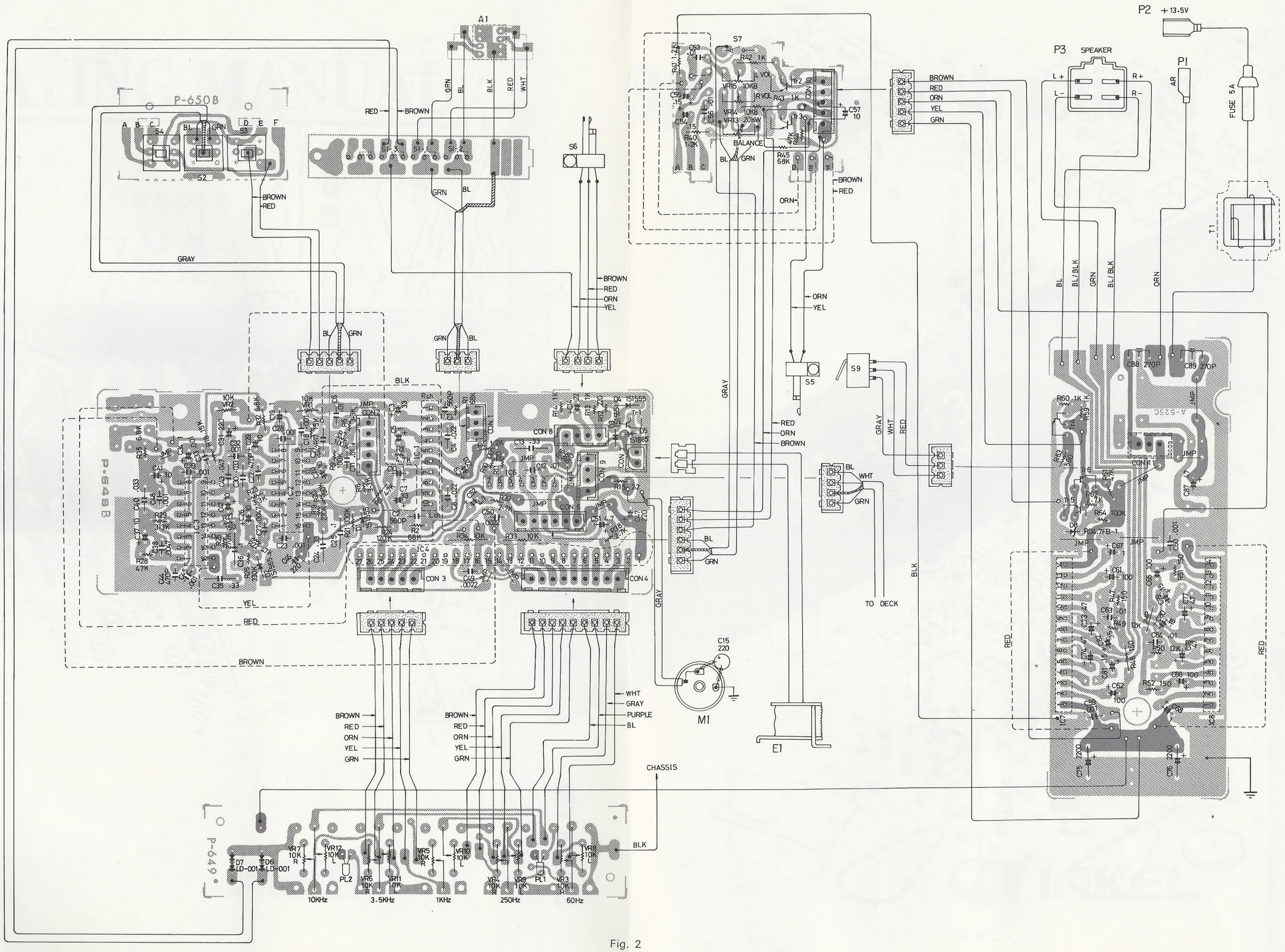

Fig. 2