Clarion

SERVICE MANUAL

Closer Relations through "CLARION SERVICE MANUAL"

MODEL AA-701A

Fabricant: CLARION CO., LTD./Exportations: CLARION SHOJI CO., LTD.
3, Kojimachi 5-chome, Chiyoda-ku, Tokyo, 102 Japan Tel. (265) 2931 Telex: J22908, J22152 CLARISHO
Succursales outre-mer:
CLARION SHOJI (EUROPA) G.M.B.H. Rudolf-Diesel-Strasse 2, 6236 Eschborn 2, West Germany. Tel. 06173-61041-42 Telex: 415414
CLARION SHOJI CO., LTD. (U.S.A.) 5500 Rosecrans Blvd, P.O.BOX 749, Lawndale, Calif., 90260 U.S.A. Tel. 213-973-1100 Telex: 66-4447
CLARION CORPORATION OF AMERICA 5500 Rosecrans Blvd, P.O.BOX 749, Lawndale, Calif., 90260 U.S.A. Tel. 213-973-1100 Telex: 66-4447
CLARION CORPORATION OF AMERICA, EASTERN DIVISION 411 North-Ave., East, Cranford, N.J., 07016 U.S.A. Tel. 201-272-8840 Telex: 13805
CLARION (HONG KONG) CO., LTD. Rooms 333-335, Star House, 3, Salisbury Road, Tsimshatsui, Kowloon, Hong Kong. Tel. 3-695393 Telex: SIERAHX74922

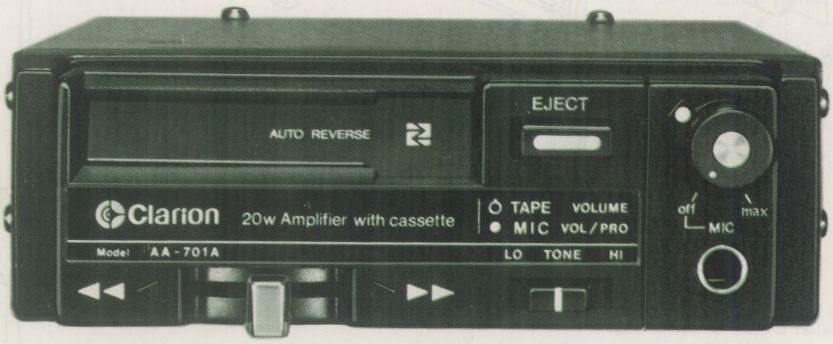

■SPECIFICATIONS:

Reproduction system:	4 track, 2 program, 1 channel (L) reproduction system.
Tape speed:	4.75cm/sec
Wow and flutter:	Less than 0.35% (WRMS)
S/N ratio:	More than 40dB
Frequency characteristic:	MIC circuit 200Hz to 6KHz −3±3(dB)(1KHz/0dB) TAPE circuit 125Hz to 6.3KHz −6±3(dB)(333Hz/0dB)
Automatic change time:	Less than 4 sec.
Fast forward and rewind time:	Less than 90 seconds (C-60)
Rated output:	20W (EIAJ standard)
Load impedance:	4Ω, 8Ω
MIC input sensitivity:	2mV ±3(dB)
Power supply voltage:	DC.14.0V (10.8V to 15.6V)
Current consumption:	Less than 4.0A (Less than 7.0A at plunger operated)
Weight:	2kg
Dimensions:	Width 140mm Height 47mm Depth 217mm

■COMPONENT:

	Main unit	1
	Booklet bag	1
DMA-069-100	Microphone	1
300-4976-00	Mounting bracket	1
300-5074-00	Mounting bracket	1
Parts bag		
723-5000-11(M5)	Hex-nut	3
734-5010-31(M5x10)	D-Sems hex bolt	3
734-5020-31(M5x20)	D-Sems hex bolt	3
740-5000-10	Flat washer	3
840-0257-00	Bonding wire	1
852-2460-01	Extension lead	1
330-6105-00	Holder	1
704-3010-86(M3x10)	Tap-screw	3

Printed in Japan 298-2033-00

■FEATURES:

- o Cassette tape reproduction and microphone program can be performed at the same time.
- o The mechanism is auto-reverse type.

■OVERALL CONNECTION DIAGRAM:

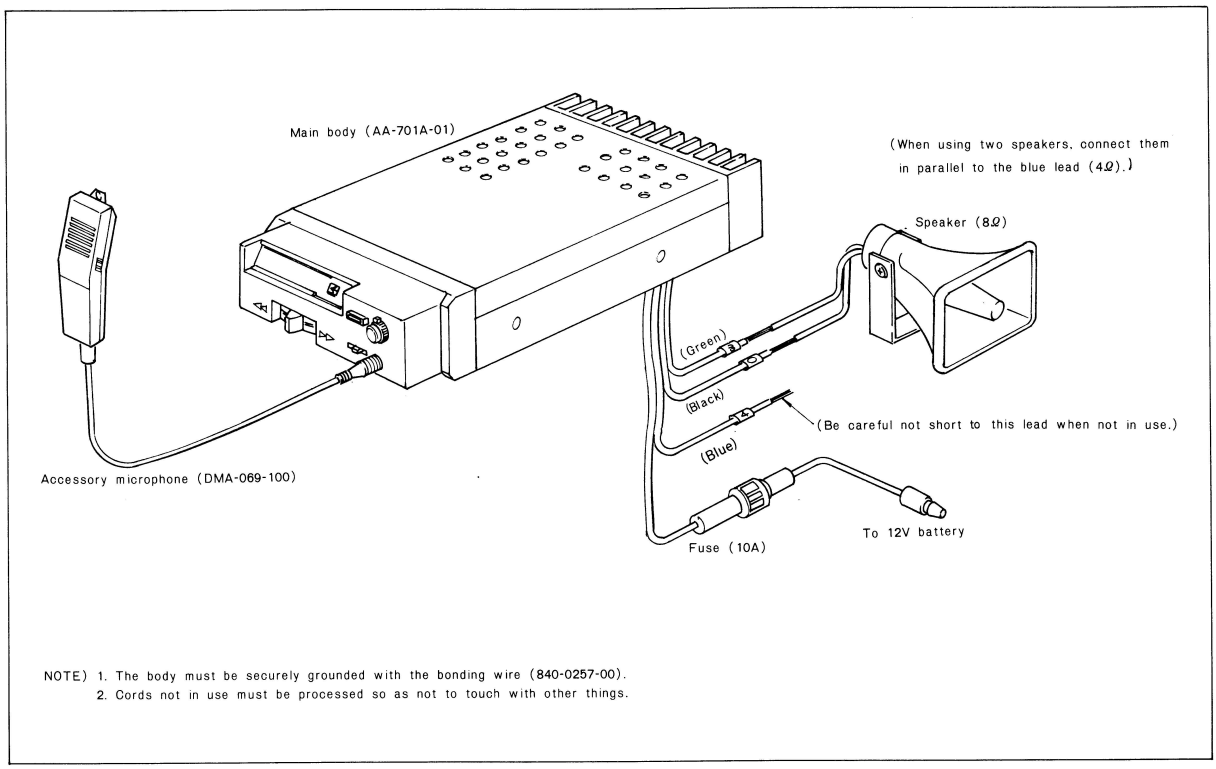

NOTE) 1. The body must be securely grounded with the bonding wire (840-0257-00).
2. Cords not in use must be processed so as not to touch with other things.

■MOUNTING PROCEDURE:

●Hanging

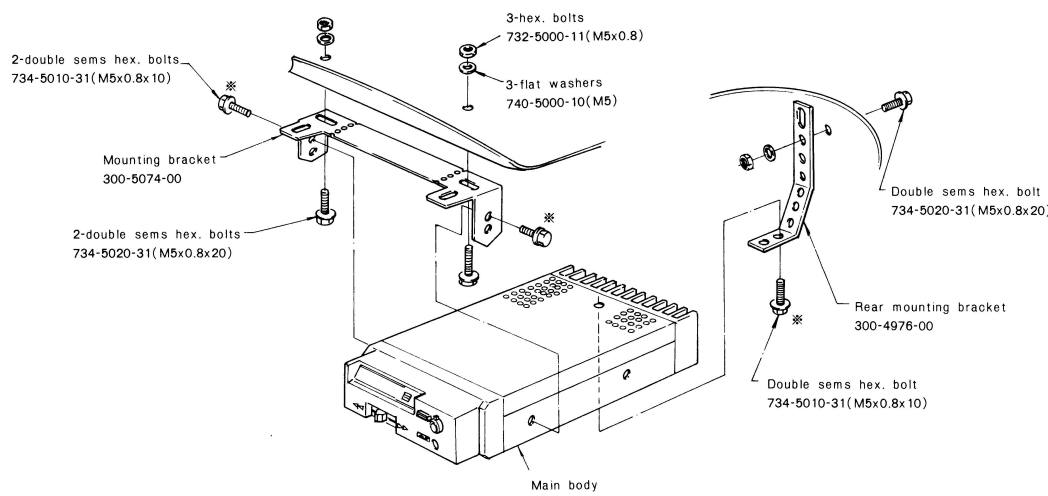

NOTE) Use hex. bolt of smallest diemnsion M5x0.8x10 at positions marked with (※)

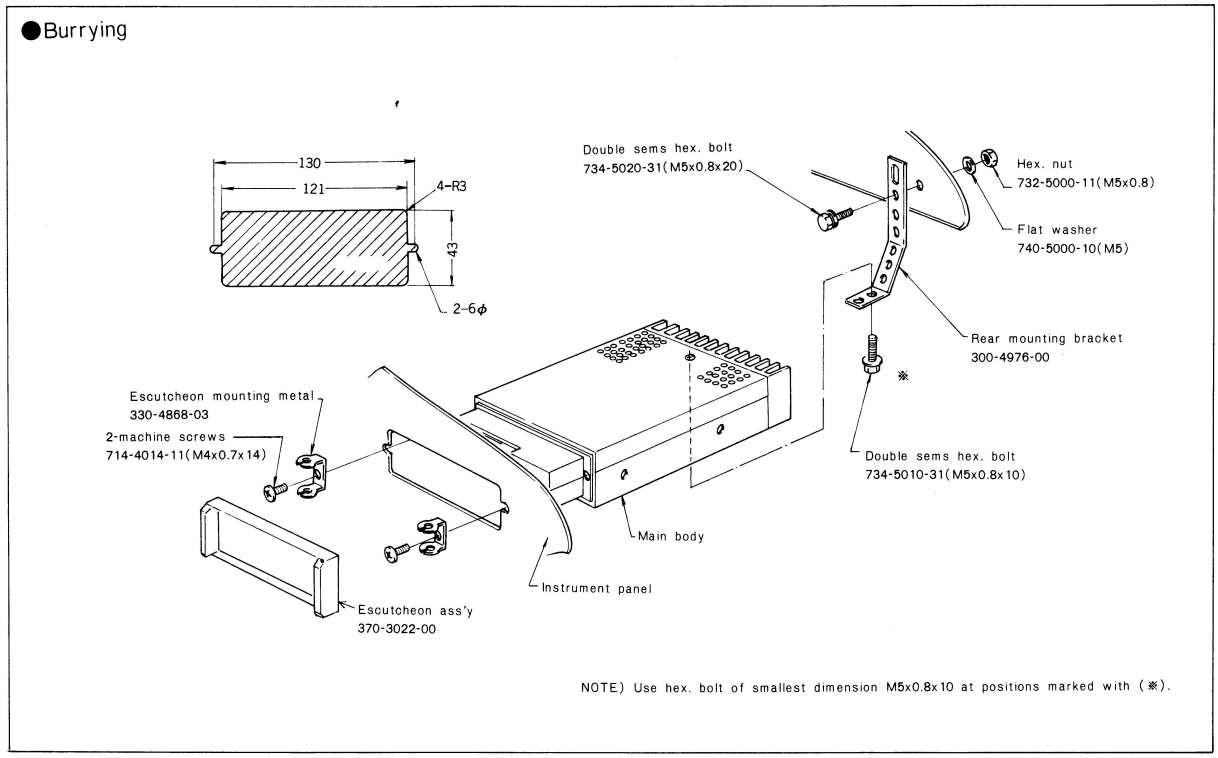

■TROUBLESHOOTING:

■TAPE section

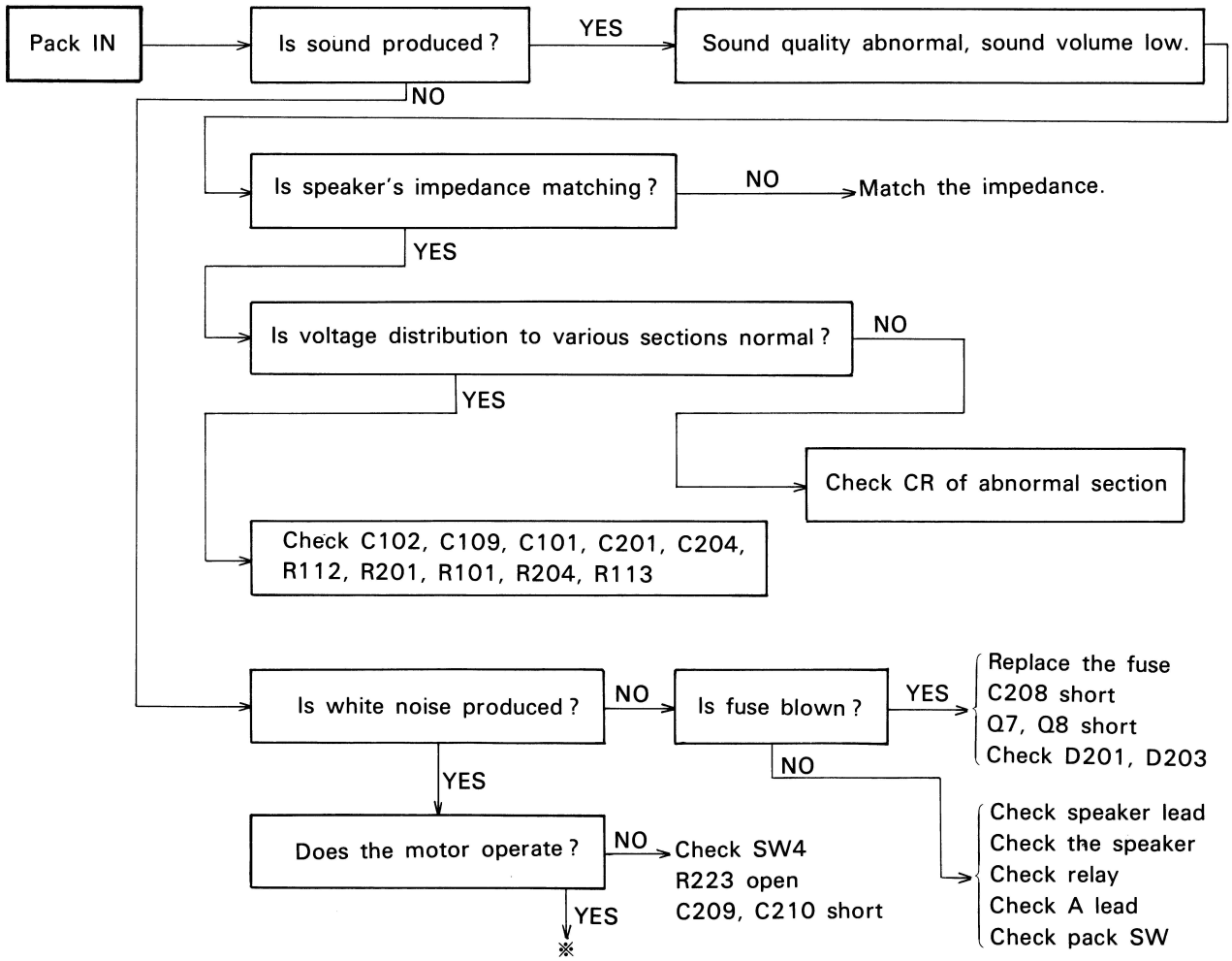

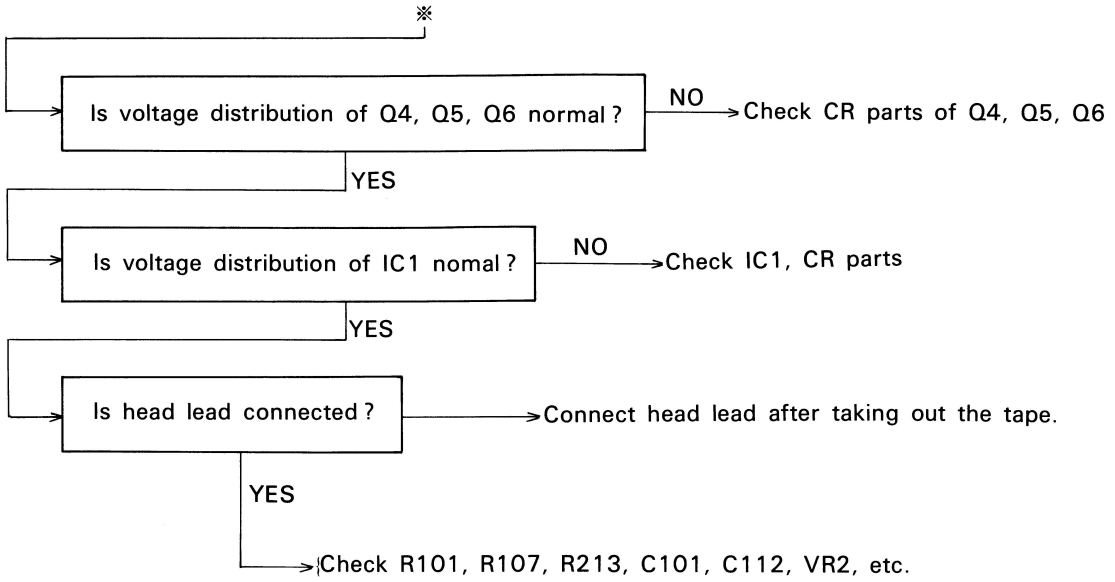
※
Is voltage distribution of Q4, Q5, Q6 normal ?
NO
Check CR parts of Q4, Q5, Q6
YES
Is voltage distribution of IC1 nomal ?
NO
Check IC1, CR parts
YES
Is head lead connected ?
Connect head lead after taking out the tape.
YES
Check R101, R107, R213, C101, C112, VR2, etc.

■MIC circuit

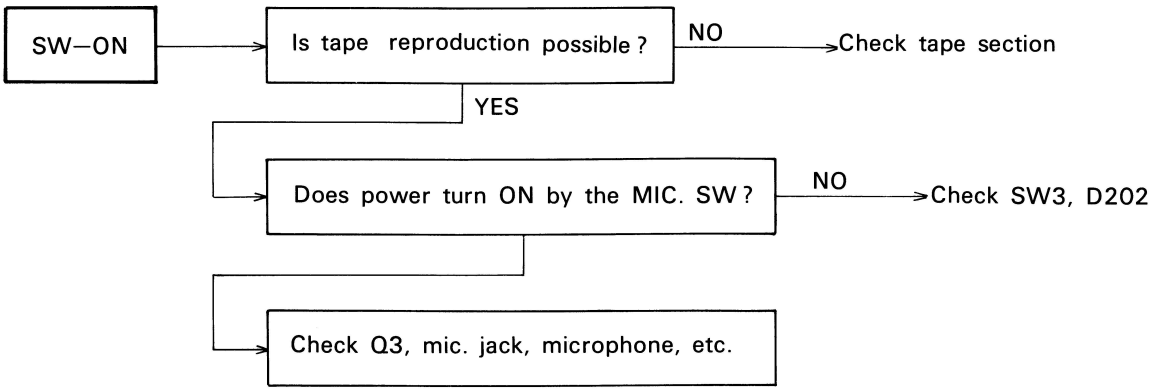
SW—ON
Is tape reproduction possible ?
NO
Check tape section
YES
Does power turn ON by the MIC. SW ?
NO
Check SW3, D202
Check Q3, mic. jack, microphone, etc.

■EXPLODED VIEW:

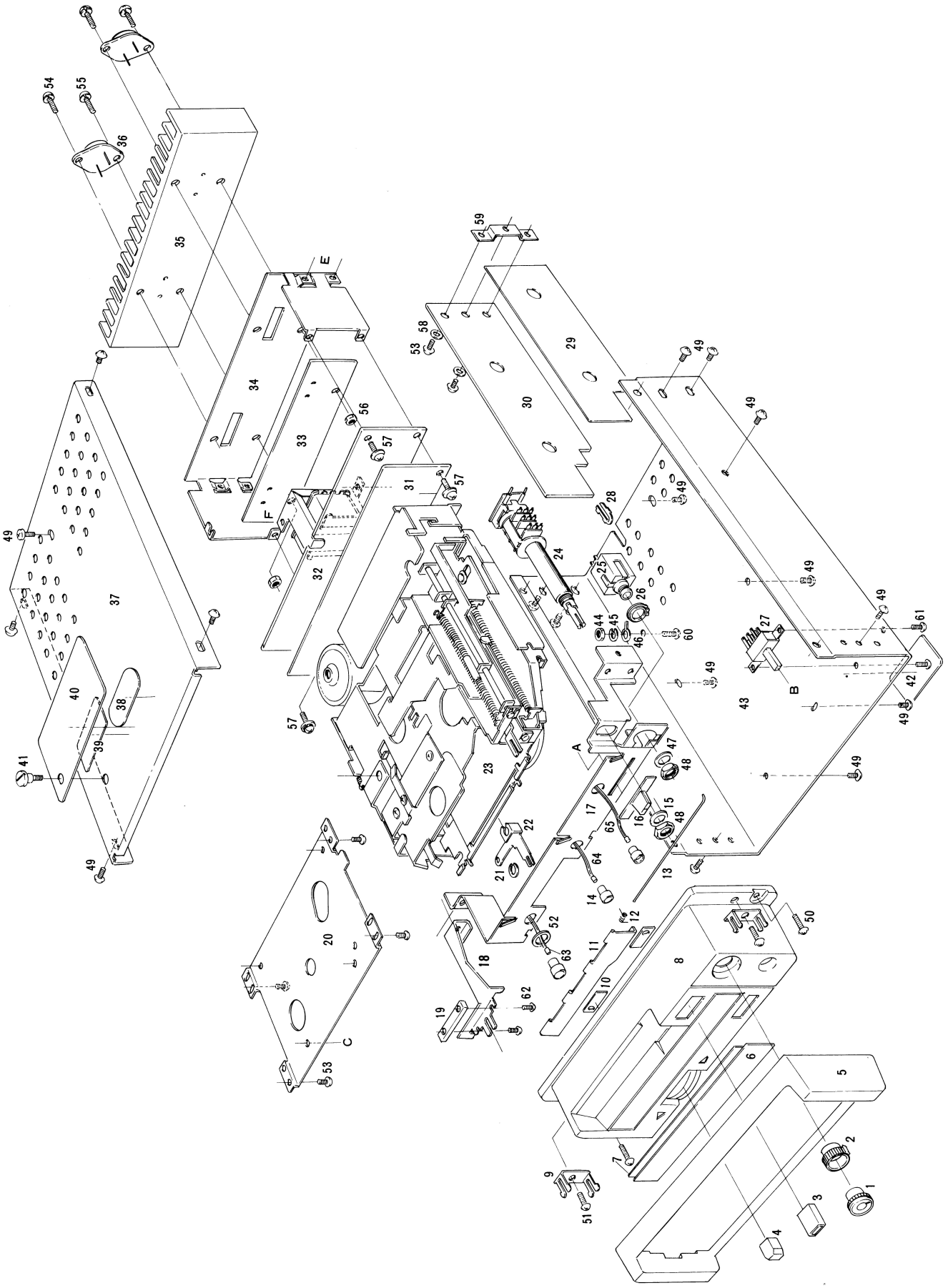

■PARTS LIST:

◎Main section

REF.NO.	PART NO.	DESCRIPTION	RANK
1	380-3630-01	Knob	2
2	380-3631-00	Knob	2
3	380-3632-01	Knob	2
4	380-3629-00	Knob	2
5	370-3022-00	Escutcheon	
6	371-2676-00	Trim plate	
7	347-0608-00	Paper part	
8	370-3090-00	Escutcheon	
9	330-4868-03	Pressed part	
10	375-0574-00	Pilotlamp accessory	
11	320-0231-00	Dustproof cover	
12	750-1713-00	Spring	
13	341-1153-00	Machined part	
14	345-2775-00	Lamp holder	
15	745-0430-01	Special washer	
16	380-3629-00	Knob	2
17	309-0312-00	Front plate	
18	330-6230-00	Switch lever	
19	341-1165-00	Guide bar	
20	330-5973-04	Pressed part	
21	746-0668-01	Special washer	
22	330-6083-01	FF lever	
23	930-0443-00	Tape mechanism	
24	012-3564-00	Variable resistor	2
25	075-0107-00	Jack	
26	746-0641-00	Special washer	
27	013-3142-00	Switch	2
28	335-0580-00	Molded part	
29	347-0687-00	Insulator	
30	099-4883-00	PWB	
31	347-0688-00	Insulator	
32	099-4884-00	PWB	
33	099-4885-00	PWB	

REF.NO.	PART NO.	DESCRIPTION	RANK
34	374-0721-01	Back plate	
35	313-0999-00	Heat sink	
36	101-0471-81	Transistor (2SB471)	1
37	310-0904-00	Upper case	
38	290-2567-00	Label	
39	285-0656-00	Guide label	
40	285-0675-00	Guide label	
41	716-0308-00	Special screw	
42	286-3678-00	Setplate	
43	311-0924-01	Lower case	
44	723-3000-21	Hexagon nut(M3)	
45	741-3000-21	Spring washer	
46	073-0468-00	Terminal	
47	746-0643-01	Special washer	
48	722-0231-00	Special nut	
49	714-3004-89	Machine screw (M3x4)	
50	714-3006-81	Machine screw (M3x6)	
51	714-4008-81	Machine screw (M4x8)	
52	745-0559-00	E-ring	
53	732-3006-11	Sems screw(M3x6)	
54	732-3008-11	Sems screw(M3x8)	
55	732-3012-11	Sems screw(M3x12)	
56	725-0182-00	Plate nut	
57	735-3008-11	Double sems screw (M3x8)	
58	740-3000-11	Flat washer	
59	330-6229-00	PWB holder	
60	714-3006-89	Machine screw (M3x6)	
61	714-2006-89	Machine screw (M2x6)	
62	716-0321-00	Special screw (M1.7x6)	
63	017-0314-04	Pilotlamp	1
64	017-0314-10	Pilotlamp	1
65	017-0324-01	Pilotlamp	1

◎Electrical section PWB 1

REF.NO.	PART NO.	DESCRIPTION	RANK
D_{101}	001-0095-00	Diode(1S2076)	3
VR_1	012-3564-00	Variable resistor	2
C_{113}	042-0140-00	Electrolytic capacitor (50V0.22μF)	
C_{114}	042-0213-00	Electrolytic capacitor (16V220μF)	
IC_1	051-0035-03	IC(HA-1406)	1
Q_2	100-0673-04	Transistor (2SA673D)	1
Q_1	102-0458-87	Transistor (2SC458LGC)	1
R_{115}	111-1011-32	Film resistor (¼W100Ω)	
$R_{108,110}$	111-1021-32	Film resistor (¼W1KΩ)	
$R_{109,112,120}^{110}$	111-1031-31	Film resistor (¼W10KΩ)	
R_{113}	111-1041-31	Film resistor (¼W100KΩ)	
$R_{111,117}$	111-1531-31	Film resistor (¼W15KΩ)	
R_{102}	111-1831-31	Film resistor (¼W18KΩ)	
R_{103}	111-2741-31	Film resistor (¼W270KΩ)	
R_{119}	111-3921-32	Film resistor (¼W3.9KΩ)	

REF.NO.	PART NO.	DESCRIPTION	RANK
R_{105}	111-4721-32	Film resistor (¼W4.7KΩ)	
$R_{107,114}$	111-5621-32	Film resistor (¼W5.6KΩ)	
R_{104}	111-5631-31	Film resistor (¼W56KΩ)	
R_{118}	111-8221-32	Film resistor (¼W8.2KΩ)	
C_{103}	141-1032-12	Polyester capacitor (0.01μF)	
C_{111}	141-1042-15	Polyester capacitor (0.1μF)	
C_{101}	141-1522-12	Polyester capacitor (0.0015μF)	
C_{112}	141-3332-12	Polyester capacitor (0.033μF)	
C_{104}	141-5622-12	Polyester capacitor (0.0056μF)	
C_{115}	141-8232-15	Polyester capacitor (0.082μF)	
C_{108}	151-1008-13	Ceramic capacitor (10PFCH)	
C_{105}	180-1064-22	Electrolytic capacitor (10V10μF)	
$C_{106,110}$	180-1074-22	Electrolytic capacitor (10V100μF)	
C_{109}	180-2254-62	Electrolytic capacitor (50V2.2μF)	
$C_{102,107}$	181-1063-32	Electrolytic capacitor (16V10μF)	

◎Electrical section PWB 2

REF.NO.	PART NO.	DESCRIPTION	RANK
$D_{201,202,203}$	001-0077-00	Diode(10D4)	3
$TH_{1,2}$	002-0140-00	Termistor(TD-14)	3
T_{101}	006-0920-00	Input transformer	3
T_{102}	007-1060-01	Output transformer	3
RY_{101}	014-0419-00	Relay	2
$R_{218,219}$	032-0028-00	Special resistor (3W0.18Ω)	
$C_{201,204}$	042-0140-00	Electrolytic capacitor (50V0.22μF)	
$C_{205,208}$	042-0165-00	Electrolytic capacitor (16V2200μF)	
$C_{207,209}$	043-0022-00	Special capacitor (250V0.04μF)	
Q_6	100-0743-03	Transistor (2SA743C)	1
$Q_{4,5}$	102-0458-87	Transistor (2SC458LGC)	1
$R_{216,217}$	111-1001-32	Film resistor (¼W10Ω)	
R_{203}	111-1011-32	Film resistor (¼W100Ω)	
R_{213}	111-1021-32	Film resistor (¼W1KΩ)	
R_{208}	111-1211-32	Film resistor (¼W120Ω)	

REF.NO.	PART NO.	DESCRIPTION	RANK
R_{202}	111-1531-32	Film resistor (¼W15KΩ)	
R_{210}	111-2221-32	Film resis or (¼W2.2KΩ)	
R_{220}	111-2231-32	Film resistor (¼W22KΩ)	
R_{207}	111-3931-32	Film resistor (¼W39KΩ)	
R_{211}	111-3941-32	Film resistor (¼W390KΩ)	
R_{201}	111-4721-32	Film resistor (¼W4.7KΩ)	
$R_{206,209}$	111-5621-32	Film resistor (¼W5.6KΩ)	
R_{204}	111-6831-32	Film resistor (¼W68KΩ)	
R_{212}	114-1011-52	Film resistor (1W100Ω)	
R_{222}	114-1511-52	Film resistor (1W150Ω)	
R_{223}	114-2291-52	Film resistor (1W2.2Ω)	
$R_{214,215}$	114-5611-52	Film resistor (1W560Ω)	
C_{202}	141-5112-11	Polyester capacitor (50V510PF)	
$C_{203,210}$	180-3374-32	Electrolytic capacitor (16V330μF)	

◎Auto-reverse circuit

REF.NO.	PART NO.	DESCRIPTION	RANK
Q_9	102-0372-15	Transistor (2SC372)	1
Q_{10}	100-0495-25	Transistor (2SA495)	1
Q_{11}	100-0562-25	Transistor (2SA562T)	1
Q_{12}	103-0235-85	Transistor (2SD235LBY)	1
$D_{301,302}$	001-0112-00	Diode(1S1588)	3
D_{303}	001-0153-00	Diode(1N4004)	3
C_{301}	181-2253-62	Electrolytic capacitor (50V2.2μF)	
C_{302}	181-3363-32	Electrolytic capacitor (16V33μF)	

REF.NO.	PART NO.	DESCRIPTION	RANK
R_{301}	111-1831-21	Film resistor (⅛W18KΩ)	
R_{303}	111-5631-21	Film resistor (⅛W56KΩ)	
R_{302}	111-3331-21	Film resistor (⅛W33KΩ)	
R_{305}	111-4731-21	Film resistor (⅛W47KΩ)	
R_{304}	111-3921-21	Film resistor (⅛W3.9KΩ)	
R_{306}	111-1221-22	Film resistor (⅛W1.2KΩ)	
R_{308}	114-3302-51	Film resistor (1W33Ω)	
R_{307}	111-1021-22	Film resistor (⅛W1KΩ)	

■EXPLODED VIEW:

◎Mechanism section

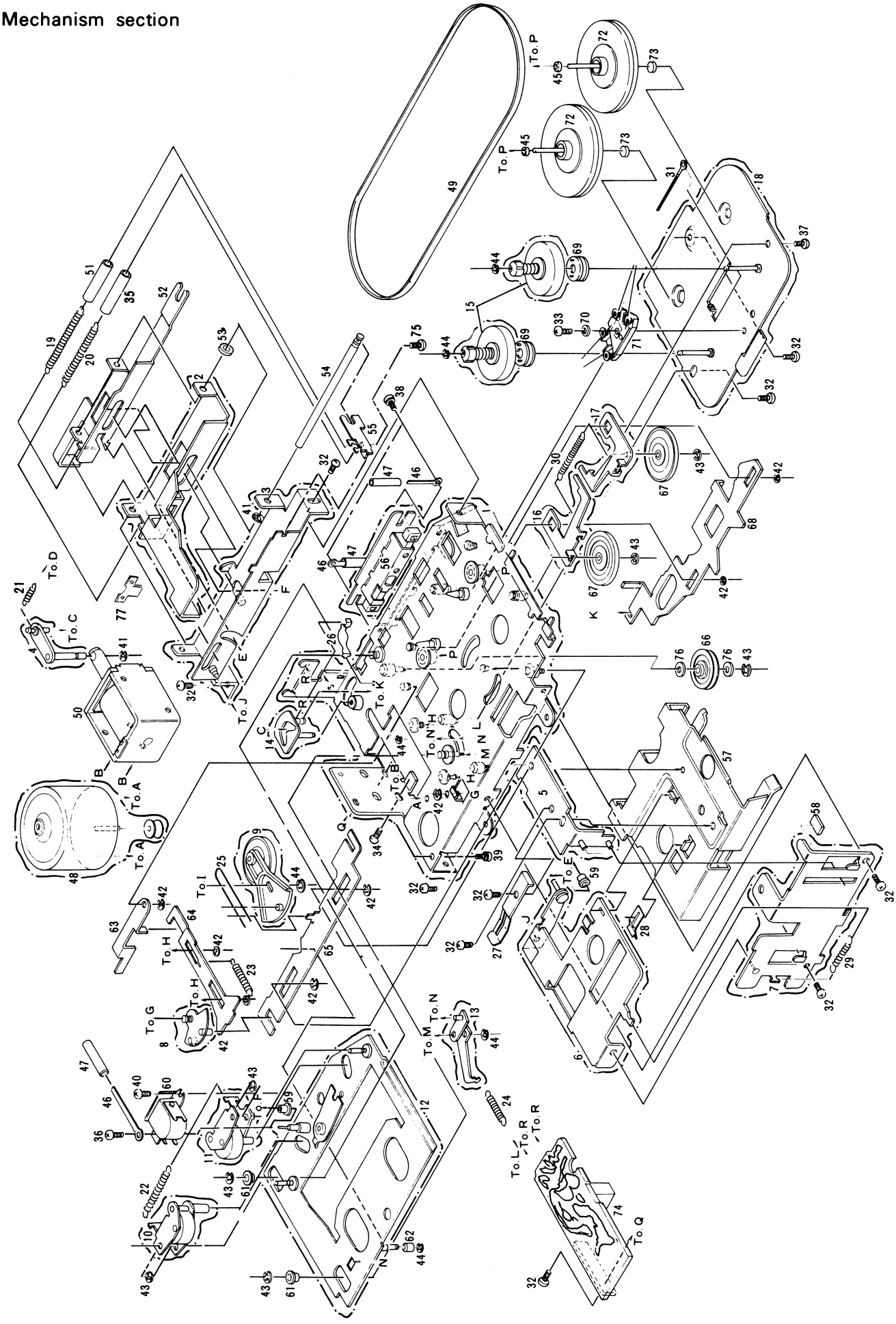

■PARTS LIST:

◎Mechanism section

REF.NO.	PART NO.	DESCRIPTION	RANK
1	960-3027-00	Deck plate assembly	
2	960-3031-00	Slide plate assembly	
3	960-3030-01	Frame assembly	
4	960-3037-00	Cam plate assembly	
5	960-3029-00	Guide plate assembly	
6	960-3043-02	Guide arm assembly	
7	960-3042-02	Side panel assembly	
8	960-3045-00	Off plate C assembly	
9	960-3046-00	FF idler assembly	3
10	960-3035-00	Roller B assembly	2
11	960-3034-00	Roller A assembly	2
12	960-3032-03	Head plate assembly	
13	960-3044-00	Arm assembly	
14	960-3038-00	Cam assembly	
15	960-3036-00	Reel base assembly	3
16	960-3041-00	Idler plate B assembly	
17	960-3040-00	Idler plate A assembly	
18	960-3039-01	Bottom plate assembly	
19	750-1794-00	Spring	3
20	750-1793-00	Spring	3
21	750-1819-00	Spring	3
22	750-1795-00	Spring	3
23	750-1799-01	Spring	3
24	750-1797-00	Spring	3
25	750-1810-01	Spring	3
26	630-0931-00	Plate spring	3
27	630-1001-01	Plate spring B	3
28	630-1000-00	Plate spring A	3
29	750-1798-00	Spring	3
30	750-1796-01	Spring	3
31	750-1811-01	Spring	3
32	714-2603-81	Machine screw (M2.6x3)	3
33	714-2605-81	Machine screw (M2.6x5)	3
34	714-3004-81	Machine screw (M3x4)	3
35	820-3030-04	Vinyl tube	3
36	714-2004-81	Machine screw (M2x4)	3
37	714-2605-41	Machine screw (M2.6x5)	3
38	732-2605-11	Sems screw (M2.6x5)	3
39	732-2604-11	Sems screw (M2.6x4)	3

REF.NO.	PART NO.	DESCRIPTION	RANK
40	716-0286-00	Special screw	3
41	743-3000-10	E-ring	3
42	743-2500-10	E-ring	3
43	743-2000-10	E-ring	3
44	743-1500-10	E-ring	3
45	746-0624-00	Special washer	3
46	330-4896-00	Pressed part	
47	820-4020-02	Vinyl tube	
48	960-3061-00	Motor assembly	2
49	602-0041-00	Belt	1
50	015-0216-00	Plunger	2
51	820-4020-04	Vinyl tube	
52	630-1016-00	Eject lever	
53	345-2651-00	Rubber part	
54	632-0716-00	Eject shaft	
55	630-1019-00	Hook plate	
56	013-0018A	Switch assembly	2
57	606-0062-01	Pack guide	
58	340-0398-00	Spacer	
59	631-0234-01	Guide roller	
60	011-0241-00	Head	2
61	610-0067-00	Roller	
62	631-0231-00	F.F roller	3
63	630-1021-00	Off plate B	
64	630-1020-00	Off plate A	
65	630-1018-01	F.F plate	
66	631-0227-00	Tention roller	3
67	631-0232-00	Idler	3
68	630-1017-00	Change plate	
69	631-0224-01	Detector drum	2
70	746-0670-00	Special washer	3
71	631-0236-00	Detector	3
72	611-0046-00	Flywheel	
73	631-0222-00	Thrust plate	3
74	099-4642-03	PWB	
75	716-0302-00	Special screw	3
76	746-0625-00	Special washer	3
77	630-1057-00	Plate spring	

■PRINTED WIRING BOARD:

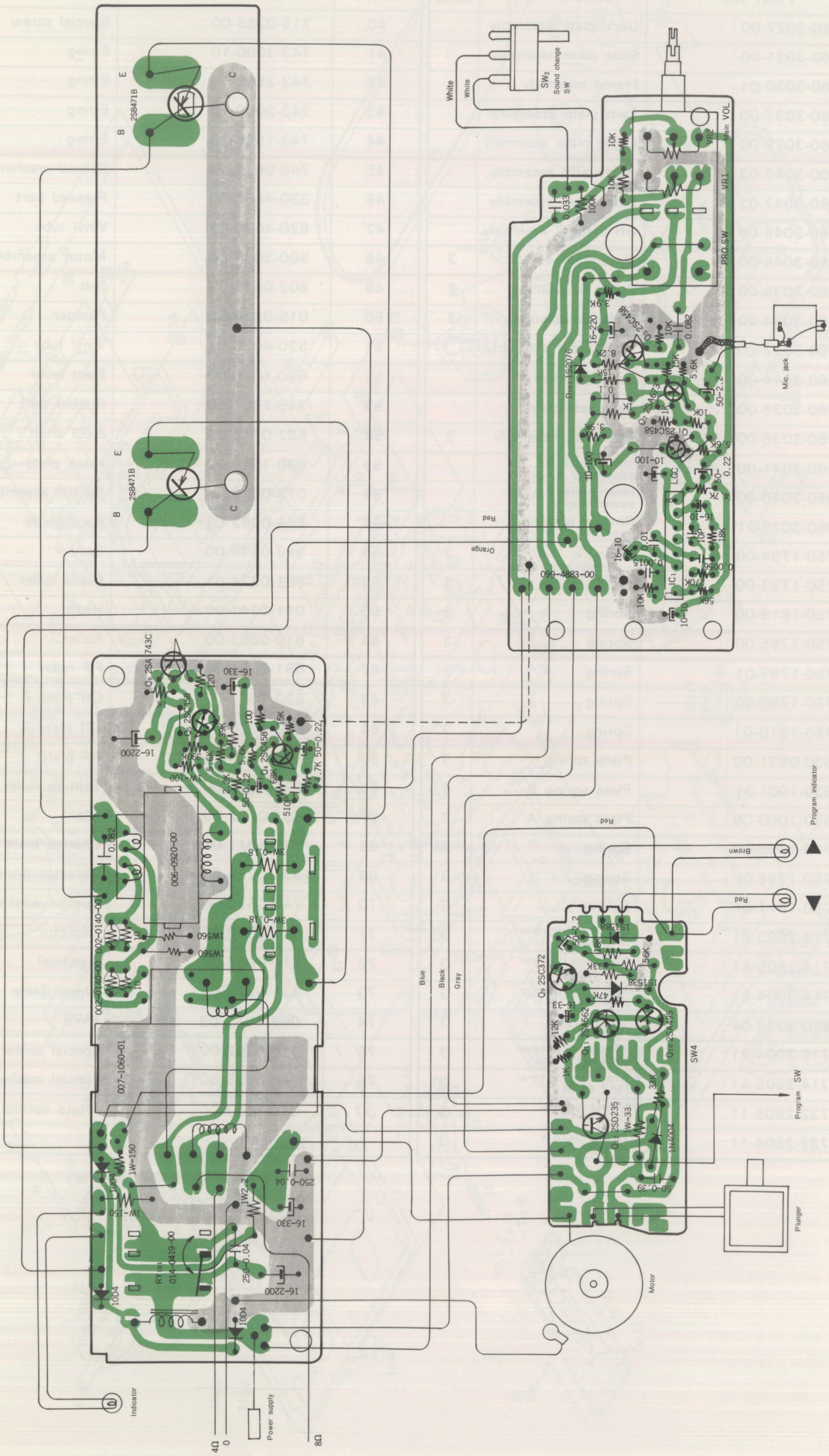

■PRINTED WIRING BOARD:

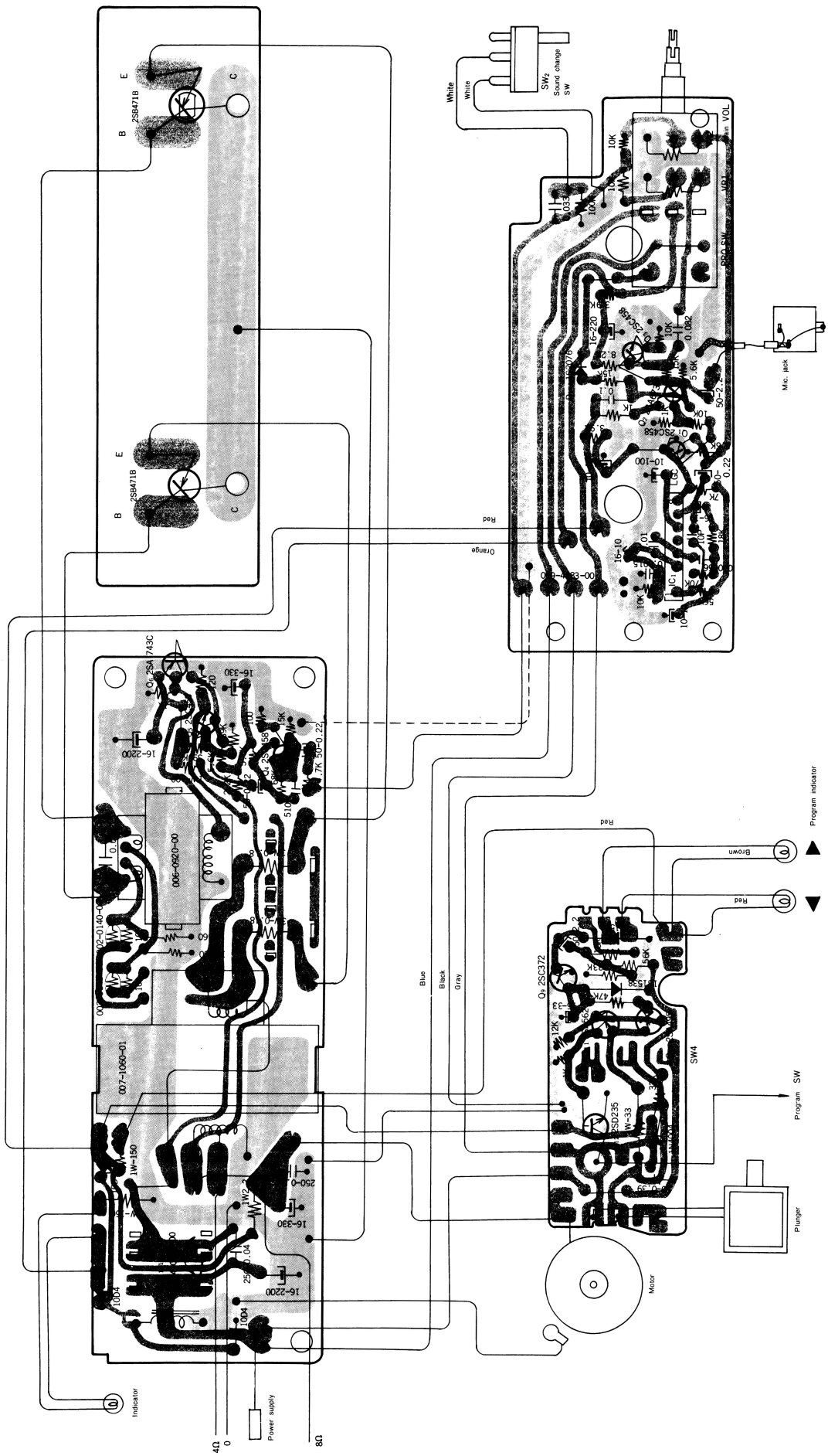

■CIRCUIT DIAGRAM:

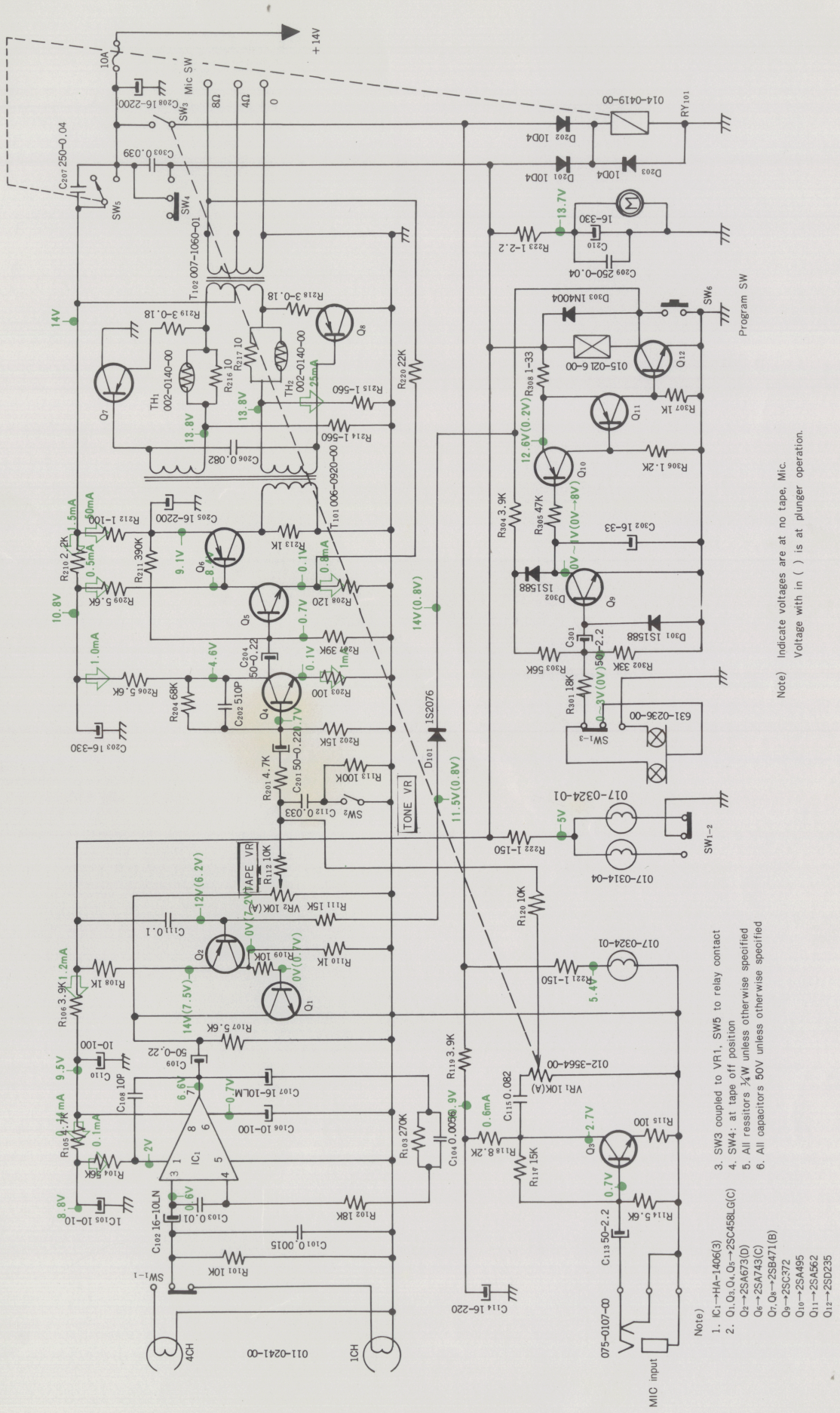

Note) Indicate voltages are at no tape, Mic.
Voltage with in ( ) is at plunger operation.

Note)
1. IC1→HA-1406(3)
2. Q1,Q3,Q4,Q5→2SC458LG(C)
   Q2→2SA673(D)
   Q6→2SA743(C)
   Q7,Q8→2SB471(B)
   Q9→2SC372
   Q10→2SA495
   Q11→2SA562
   Q12→2SD235
3. SW3 coupled to VR1, SW5 to relay contact
4. SW4: at tape off position
5. All resistors ¼W unless otherwise specified
6. All capacitors 50V unless otherwise specified

■CIRCUIT DIAGRAM:

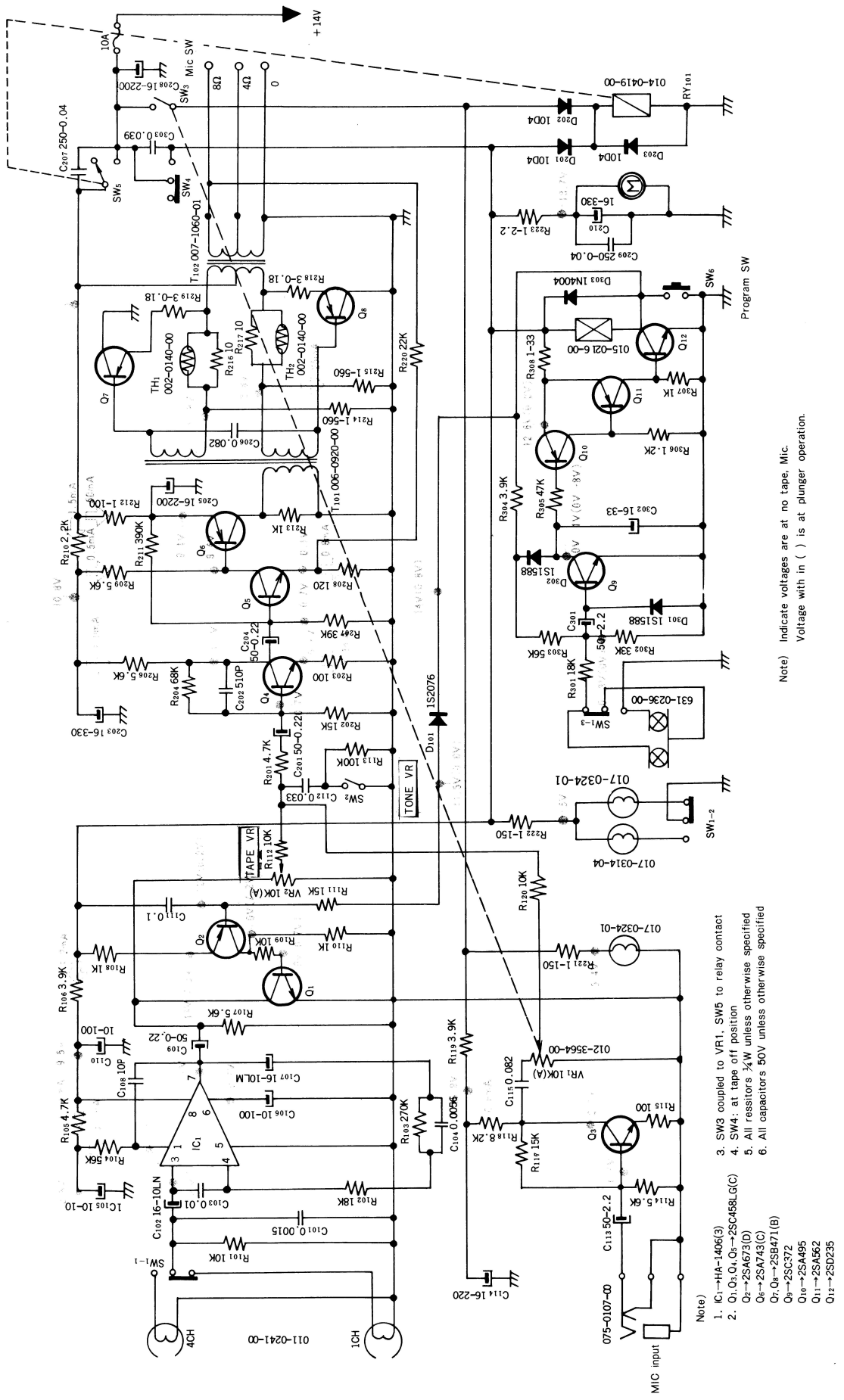

Note) Indicate voltages are at no tape, Mic.
Voltage with in ( ) is at plunger operation.

Note)
1. IC1→HA-1406(3)
2. Q1,Q3,Q4,Q5→2SC458LG(C)
Q2→2SA673(D)
Q6→2SA743(C)
Q7,Q8→2SB471(B)
Q9→2SC372
Q10→2SA495
Q11→2SA562
Q12→2SD235
3. SW3 coupled to VR1, SW5 to relay contact
4. SW4: at tape off position
5. All ressitors ¼W unless otherwise specified
6. All capacitors 50V unless otherwise specified