Acoustic to Epiphone

- **This File contains 141 schematics from the manufacturers Acoustic to Epiphone**
- **To use this file click on the Show/Hide Navigation Pane (on the menu bar), and then click the Bookmarks tab**
- **or ... Choose Window > Show Bookmarks**
- **Click the bookmark for the manufacturer whose schematics you wish to view**
- **If the entry has a triangle to the left, click on the triangle to view sub-entries**

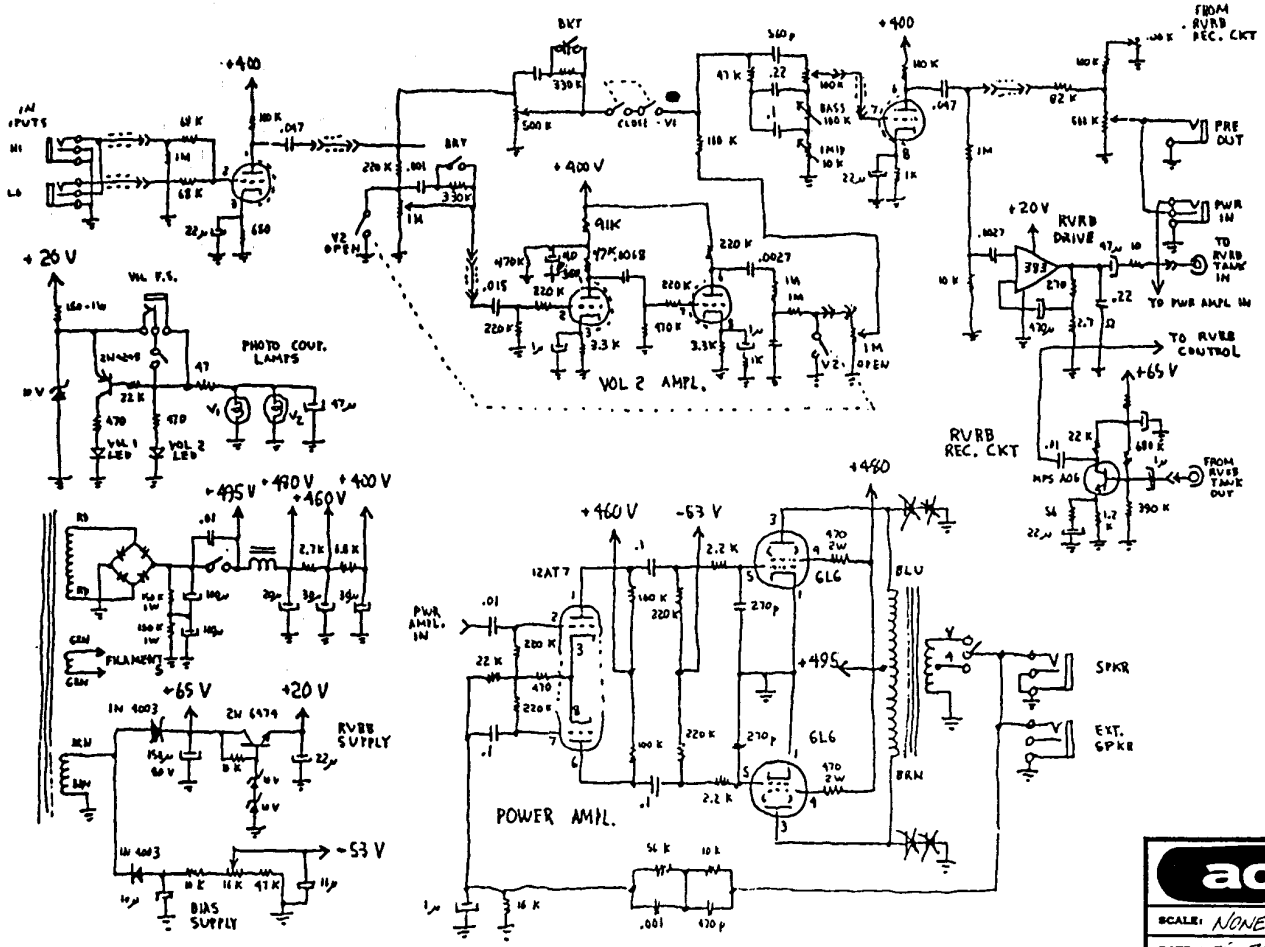

acoustic		
SCALE: NONE	APPROVED BY:	DRAWN BY JEB
DATE: 06-30-81		REVISED
Model: G60T TUBE GUITAR AMPLIFIER		
		DRAWING NUMBER

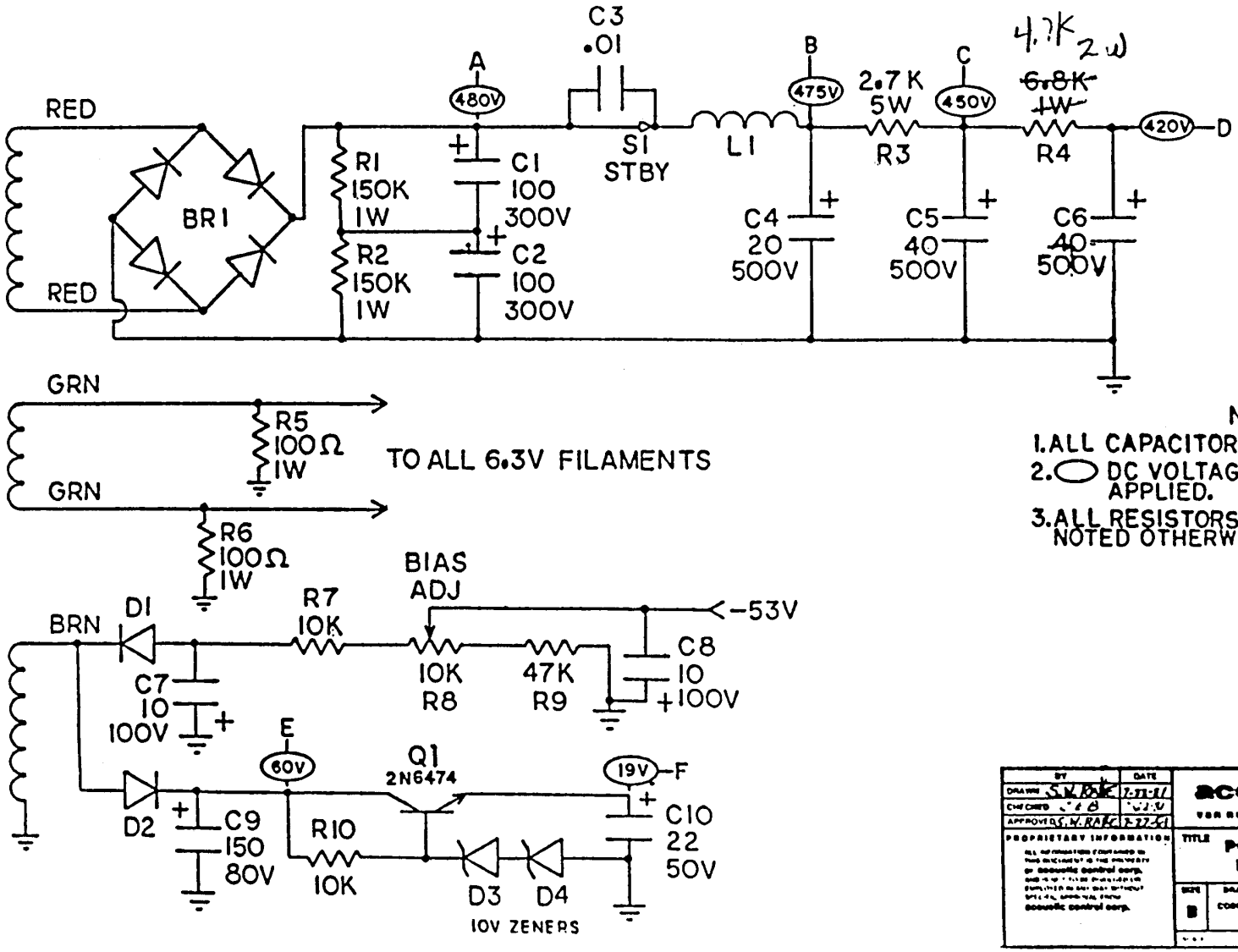

NOTES:

1. ALL CAPACITORS IN MFD.
2. ⬭ DC VOLTAGE FROM GND., NO SIG. APPLIED.
3. ALL RESISTORS 1/2W UNLESS NOTED OTHERWISE.

DRAWN S.W. Rak	2-23-81	acoustic control corp
CHECKED		van nuys, california 91406
APPROVED S.W. Rak	2-27-81	
PROPRIETARY INFORMATION		TITLE POWER SUPPLY SCHEMATIC MODELS G60T & G100T
		SIZE B · CODE · PART NO. 1819 · REV
		DO NOT SCALE THIS PRINT

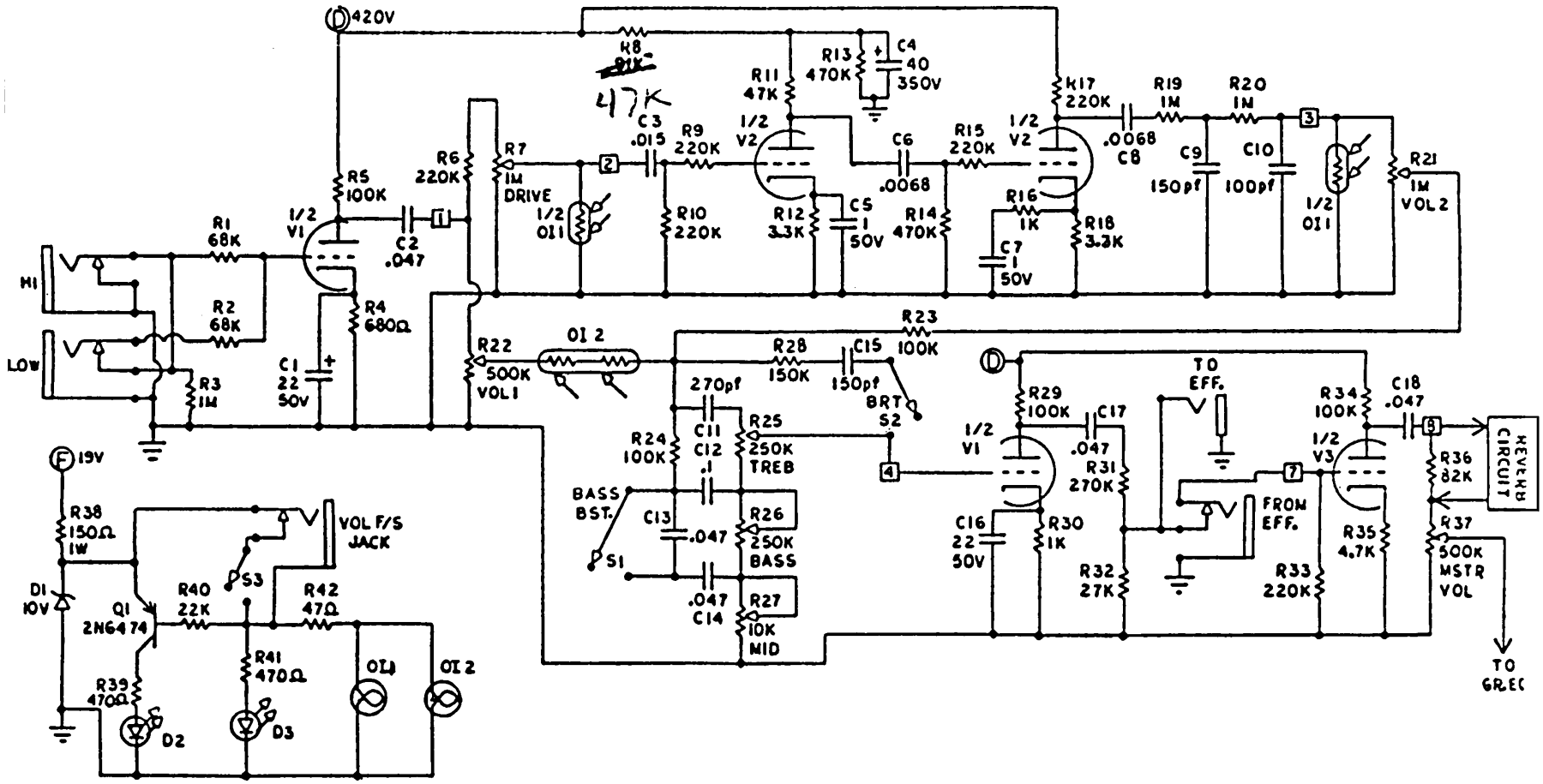

5. ALL TUBES ARE 12AX7A/ 7025
4. ☐ REF PCB CALLOUTS.
3. ◯ REF. PWR SUP SCHEM. (1819).
2. ALL RESISTORS 1/2 WATT UNLESS OTHERWISE NOTED
1. ALL CAPACITORS IN mfd UNLESS OTHERWISE NOTED.

NOTES:

BY	DATE
DRAWN S.W. Rose	7-27-61
CHECKED	
APPROVED S.W. Rose	7-27-61

PROPRIETARY INFORMATION

acoustic control corp
van nuys, california 91406

TITLE PREAMP SCHEMATIC MODEL G100T

SIZE B | CODE | PART NO. 1820 | REV

DO NOT SCALE THIS PRINT

BASIC 60 **KIT**

Allied

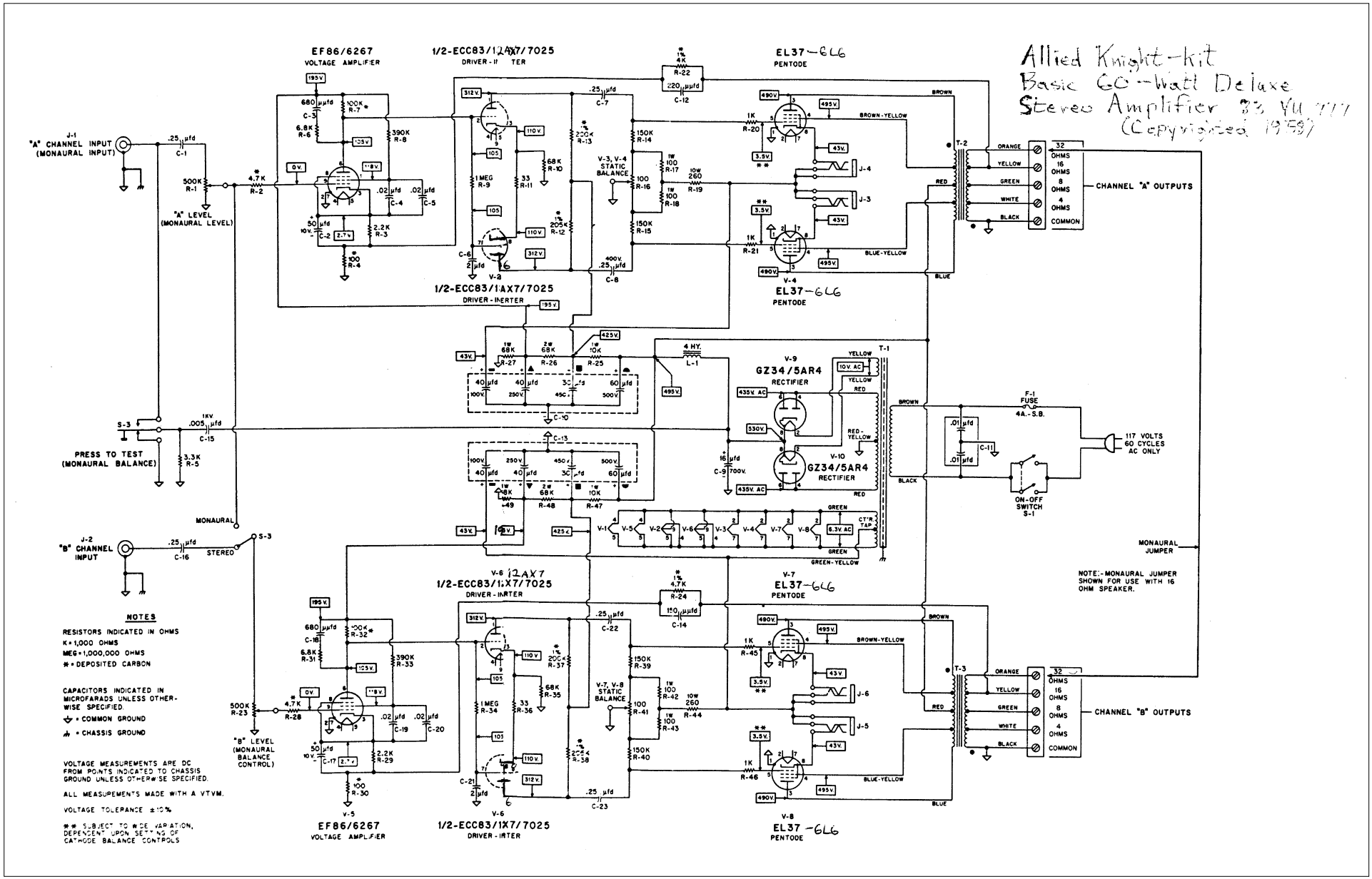

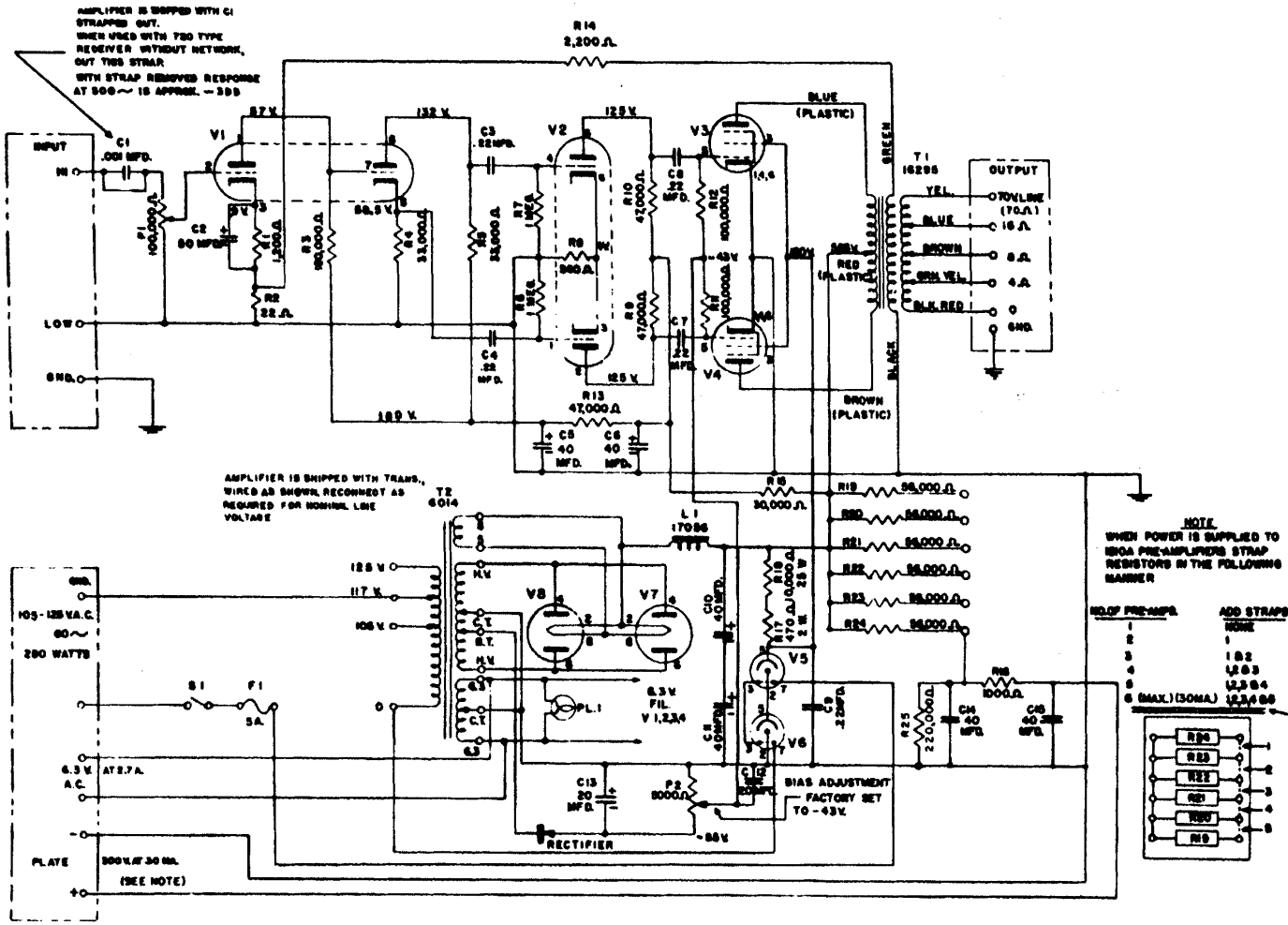

PARTS LIST	
C1	.001 MFD. 600V KING 8.221-102
C2	50 MFD. 3V C.D.R.R. 50-3
C3,4,5,6	(2)50-40 MFD. 600V C.D.R.R. 6480
C7,8,9	.22 MFD. 600V MICAMOLD
C10,11	(1)40 MFD. 450V MALLORY F.P. 148
C12,13	20 MFD. 150V C.D.R.R. 3018
R25	220,000 OHMS 2W ±10%
R1	1200 " 1/2 W " ±10%
R2	22 " " " "
R3	100,000 " 1 W "
R4,5	33,000 " " "
R6,7	1 MEG. " 1/2 " "
R8	560 " 1 W "
R9,10,13	47,000 " " "
R11,12	100,000 " 1/2 "
R14	2,200 " " "
R15	30,000 " 10 W. OHMITE
R16	1000 " 2 W. ±10%
R17	470 " 2 " "
R18	10,000 " 25 " OHMITE DEW
R19-24 (INC.)	56,000 " 2 " " "
P1	100,000 OHMS ALLEN BRADLEY J.A. 104
P2	5000 " W.W. I.R.C. W5000
S1	ROTARY SWITCH 5P2X H.&H. 188
F1	5 AMP. 3AG
V1	12AY7 (G.E.)
V2	6SN7
V3,4	6L6 (R.C.A.)
V5	0A3 VR75
V6	0C3 VR105
V7,8	5R4GY
PL. 1	NEON 44
RECTIFIER	30MA. RADIO RECTIFIER 8V1
T1	FERRELESS 16295
T2	6014
L1	17086

OPERATING DATA	
GAIN (FROM 100,000 Ω SOURCE)	75 DB
POWER OUTPUT	70 WATTS AT 5% T.H.D.
FREQUENCY RESPONSE	±1 DB 50 TO 20,000~
NOISE LEVEL	-65 DB
REF:	0 DB = 6 WATTS

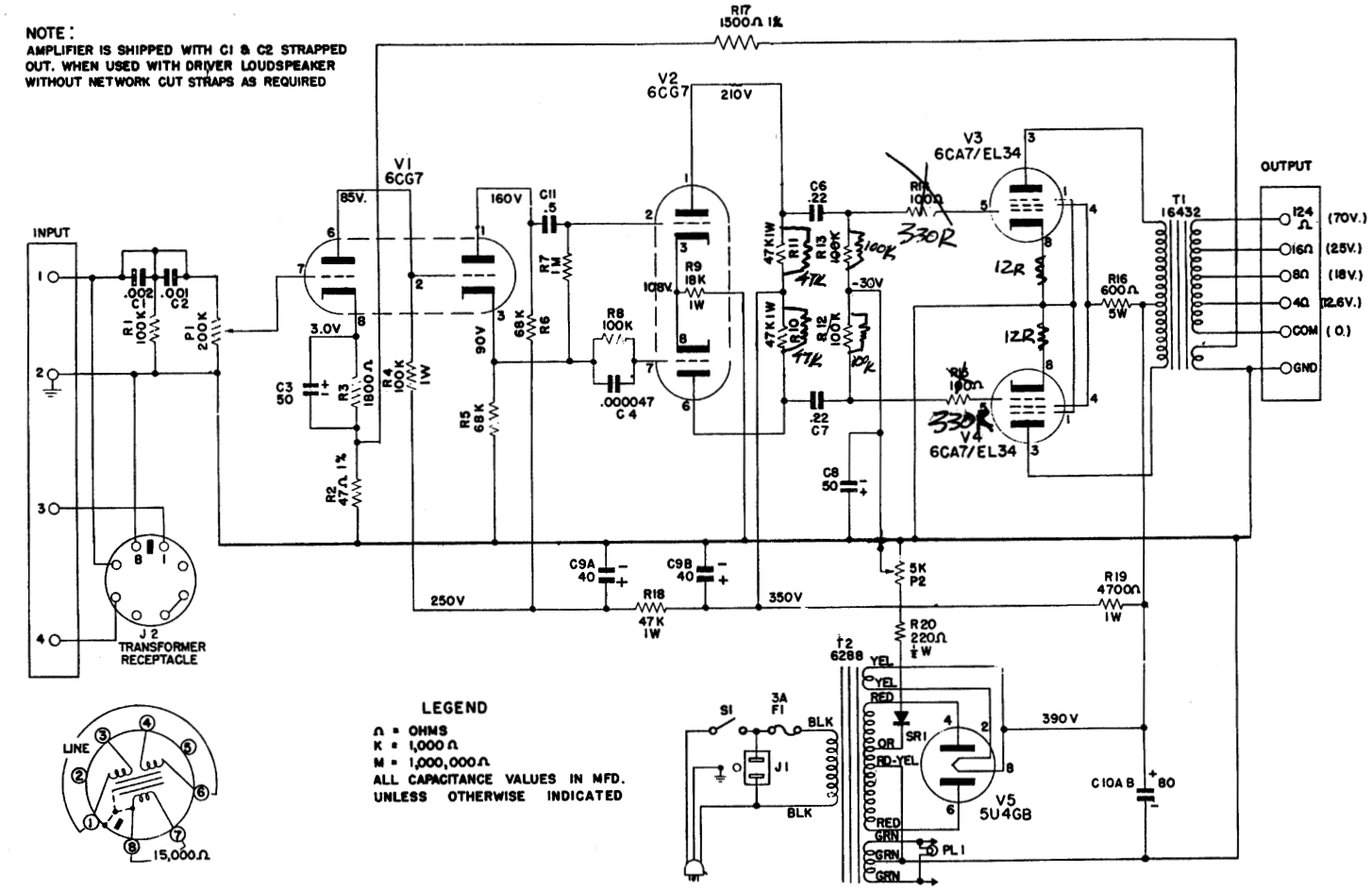
NOTE:
AMPLIFIER IS SHIPPED WITH C1 & C2 STRAPPED OUT. WHEN USED WITH DRIVER LOUDSPEAKER WITHOUT NETWORK CUT STRAPS AS REQUIRED
INPUT
OUTPUT
V1 6CG7
V2 6CG7
V3 6CA7/EL34
V4 6CA7/EL34
V5 5U4GB
T1 16432
T2 6288
R17 1500Ω 1%
R16 600Ω 5W
R19 4700Ω 1W
R18 47K 1W
R20 220Ω ½W
5K P2
C10A B 80
390V
350V
250V
210V
160V
85V
90V
3.0V
J2 TRANSFORMER RECEPTACLE
LINE
15,000Ω
LEGEND
Ω = OHMS
K = 1,000 Ω
M = 1,000,000 Ω
ALL CAPACITANCE VALUES IN MFD. UNLESS OTHERWISE INDICATED
15095 TRANSFORMER IMPEDANCES
LINE STRAP J2
150Ω 1-4, 3-6
600Ω 3-4
ALTEC LANSING
1568 A AMPLIFIER
FIRST MADE FOR
ALTEC
ANAHEIM, CALIFORNIA
1568 A AMPLIFIER SCHEMATIC
DR. BY G.J.S.
6344-6

NOTE:
AMPLIFIER IS SHIPPED WITH C1 & C2 STRAPPED OUT. WHEN USED WITH DRIVER LOUDSPEAKER WITHOUT NETWORK CUT STRAPS AS REQUIRED.

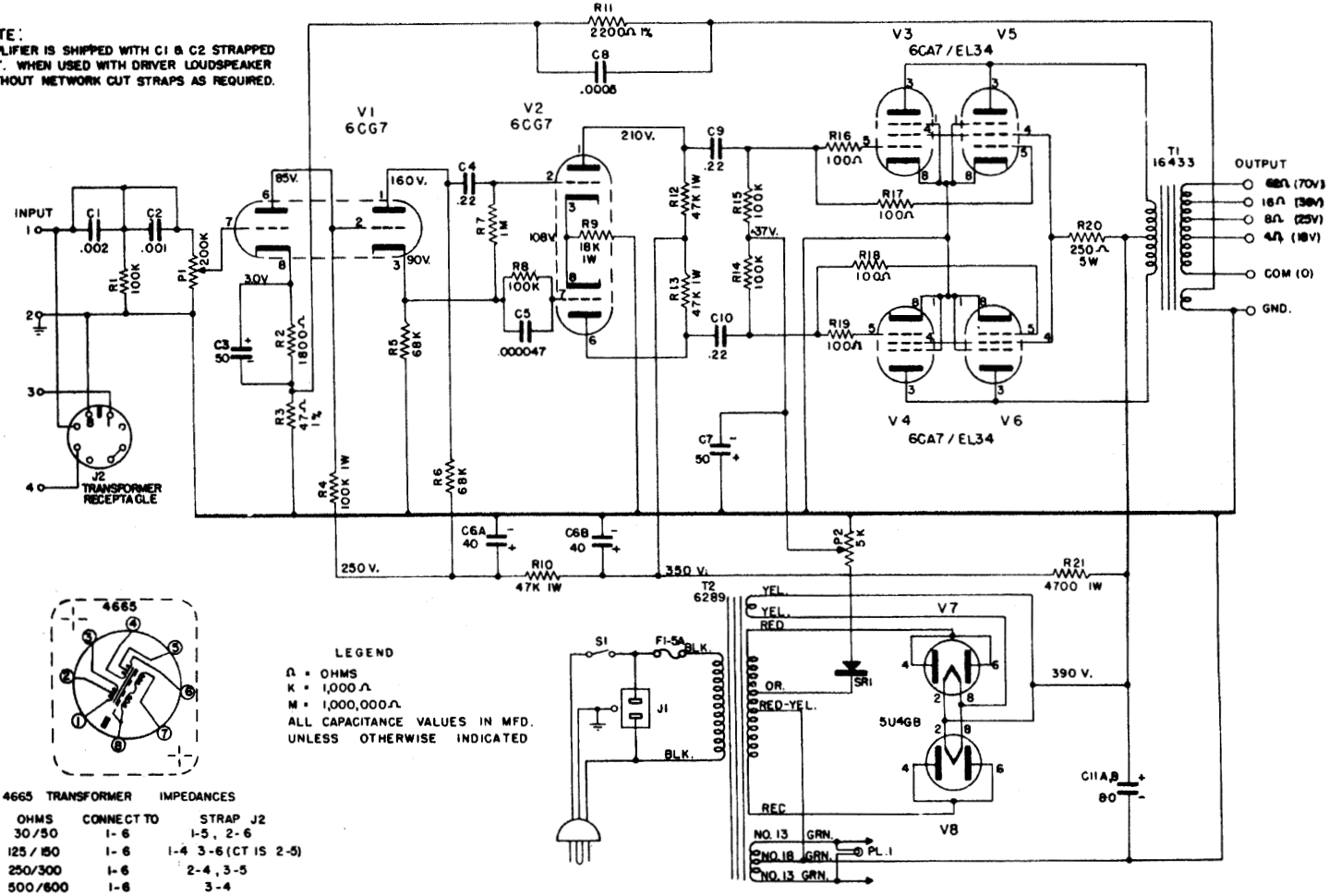

LEGEND
Ω = OHMS
K = 1,000 Ω
M = 1,000,000 Ω
ALL CAPACITANCE VALUES IN MFD. UNLESS OTHERWISE INDICATED

4665 TRANSFORMER IMPEDANCES

OHMS	CONNECT TO	STRAP J2
30/50	1-6	1-5, 2-6
125/150	1-6	1-4 3-6 (CT IS 2-5)
250/300	1-6	2-4, 3-5
500/600	1-6	3-4

ALTEC LANSING 1569A AMPLIFIER

FIRST MADE FOR

1				ALTEC ANAHEIM, CALIFORNIA
				1569A AMPLIFIER SCHEMATIC
				A.B. 6340

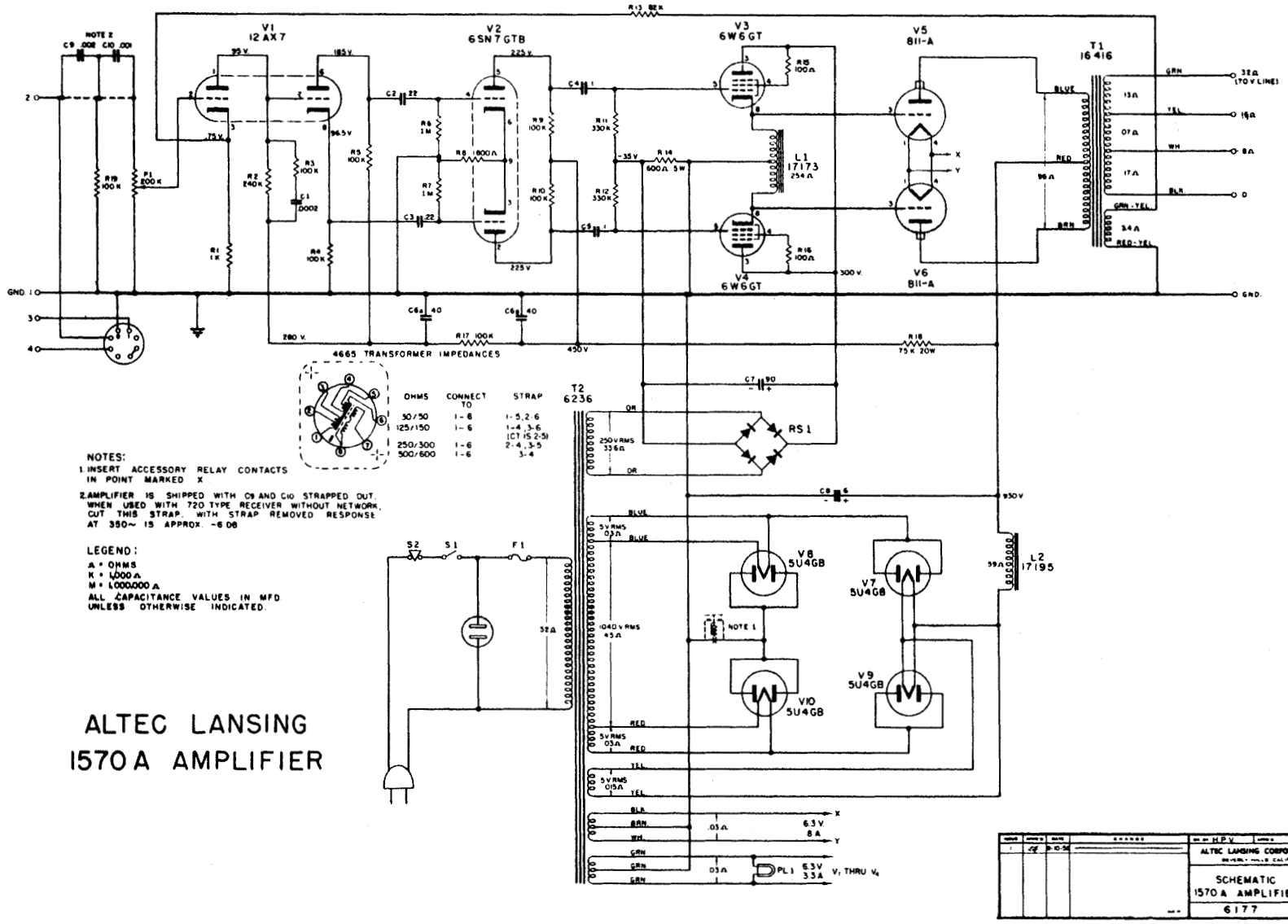
V1
12 AX 7
V2
6SN7GTB
V3
6W6GT
V4
6W6GT
V5
811-A
V6
811-A
T1
16416
T2
6236
L1
17173
L2
17195
V8
5U4GB
V7
5U4GB
V9
5U4GB
V10
5U4GB
RS 1
S2
S1
F1
PL 1
GND.
4665 TRANSFORMER IMPEDANCES
OHMS
CONNECT TO
STRAP
30/50
125/150
250/300
500/600
NOTES:
1. INSERT ACCESSORY RELAY CONTACTS IN POINT MARKED X
2. AMPLIFIER IS SHIPPED WITH C9 AND C10 STRAPPED OUT. WHEN USED WITH 720 TYPE RECEIVER WITHOUT NETWORK, CUT THIS STRAP. WITH STRAP REMOVED RESPONSE AT 350~ IS APPROX. -6 DB
LEGEND:
A = OHMS
K = 1,000 Ω
M = 1,000,000 Ω
ALL CAPACITANCE VALUES IN MFD UNLESS OTHERWISE INDICATED.
ALTEC LANSING
1570 A AMPLIFIER
ALTEC LANSING CORPORATION
SCHEMATIC
1570 A AMPLIFIER
6177

TROUBLESHOOTING MUSICAL INSTRUMENT AMPLIFIERS

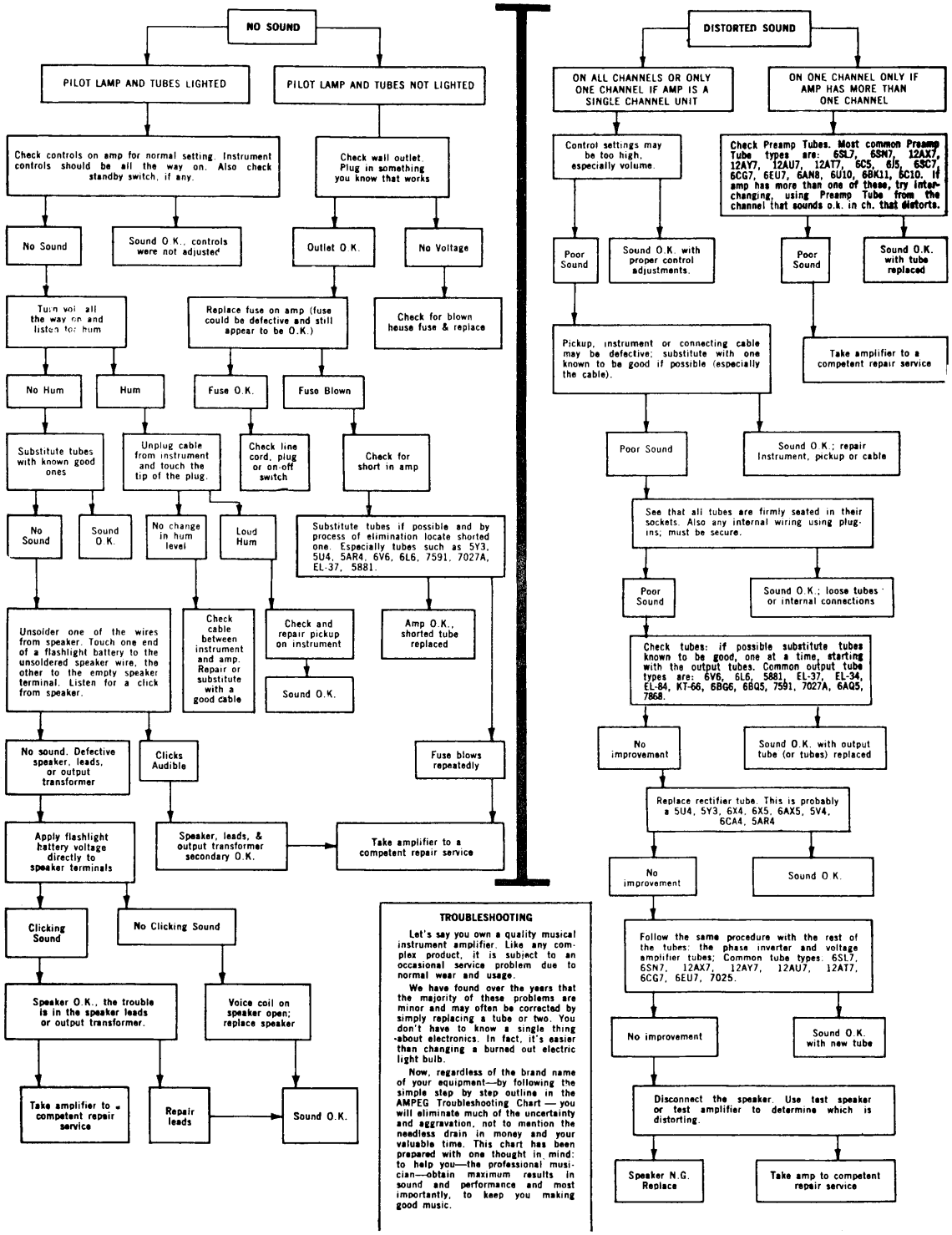

TROUBLESHOOTING

Let's say you own a quality musical instrument amplifier. Like any complex product, it is subject to an occasional service problem due to normal wear and usage.

We have found over the years that the majority of these problems are minor and may often be corrected by simply replacing a tube or two. You don't have to know a single thing about electronics. In fact, it's easier than changing a burned out electric light bulb.

Now, regardless of the brand name of your equipment—by following the simple step by step outline in the AMPEG Troubleshooting Chart — you will eliminate much of the uncertainty and aggravation, not to mention the needless drain in money and your valuable time. This chart has been prepared with one thought in mind: to help you—the professional musician—obtain maximum results in sound and performance and most importantly, to keep you making good music.

TROUBLE SHOOTING FLOW CHART

Ampeg

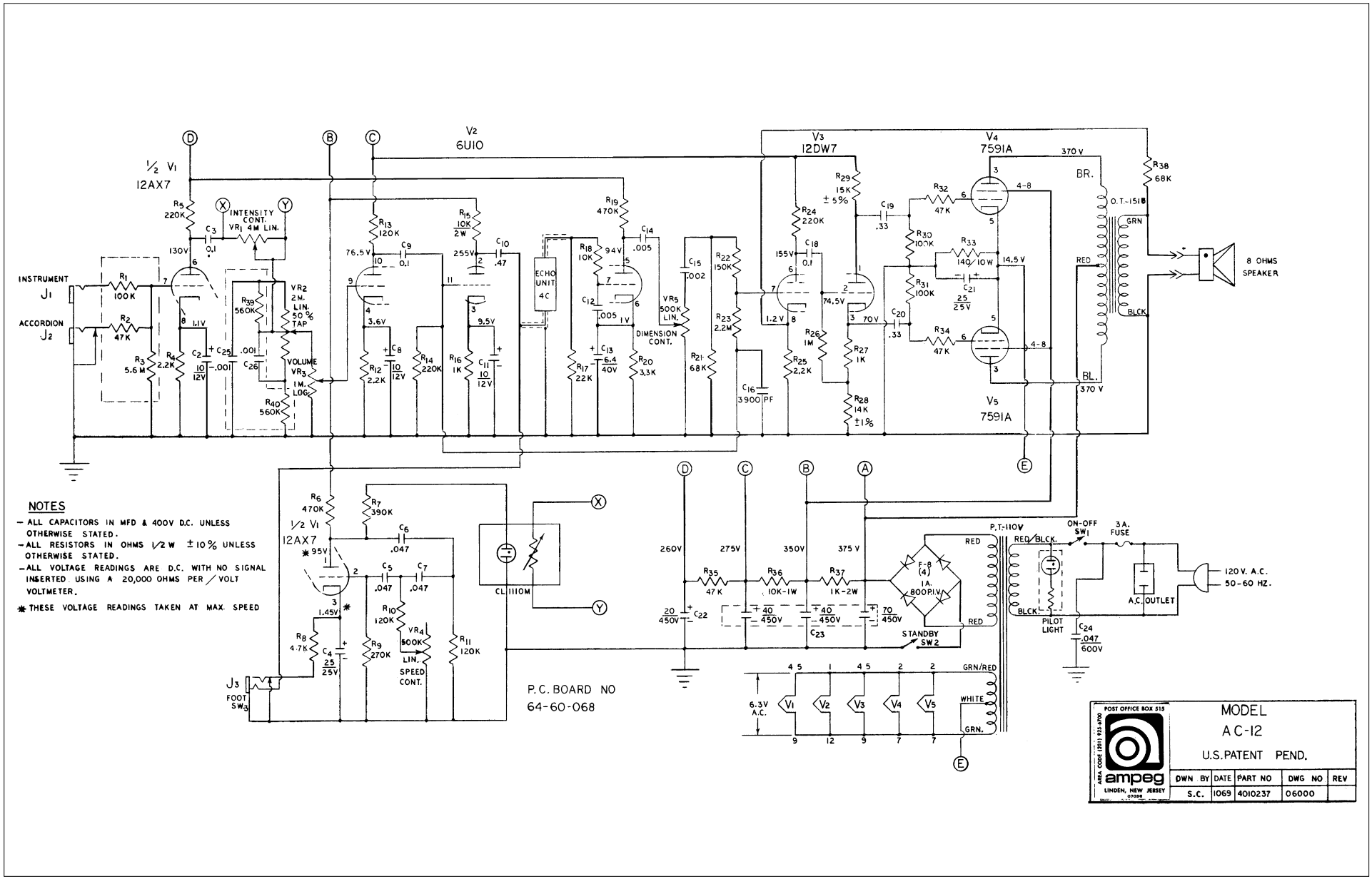
½ V1
12AX7
V2
6U10
V3
12DW7
V4
7591A
V5
7591A
INSTRUMENT
J1
ACCORDION
J2
INTENSITY CONT.
VR1 4M LIN.
VR2
2M. LIN. 50% TAP
VOLUME
VR3
1M. LOG.
ECHO UNIT 4C
DIMENSION CONT.
VR5
500K LIN.
8 OHMS SPEAKER
O.T.-151B
BR.
BL.
370 V
NOTES
- ALL CAPACITORS IN MFD & 400V D.C. UNLESS OTHERWISE STATED.
- ALL RESISTORS IN OHMS ½ W ±10% UNLESS OTHERWISE STATED.
- ALL VOLTAGE READINGS ARE D.C. WITH NO SIGNAL INSERTED USING A 20,000 OHMS PER / VOLT VOLTMETER.
✱ THESE VOLTAGE READINGS TAKEN AT MAX. SPEED
½ V1
12AX7
CL 1110M
J3
FOOT SW3
VR4
500K LIN.
SPEED CONT.
P.C. BOARD NO
64-60-068
P.T.-110V
ON-OFF SW1
3A. FUSE
120 V. A.C.
50-60 HZ.
A.C. OUTLET
PILOT LIGHT
STANDBY SW2
6.3V A.C.
GRN/RED
WHITE
GRN.
MODEL
AC-12
U.S.PATENT PEND.
ampeg
LINDEN, NEW JERSEY
DWN BY
DATE
PART NO
DWG NO
REV
S.C.
1069
4010237
06000

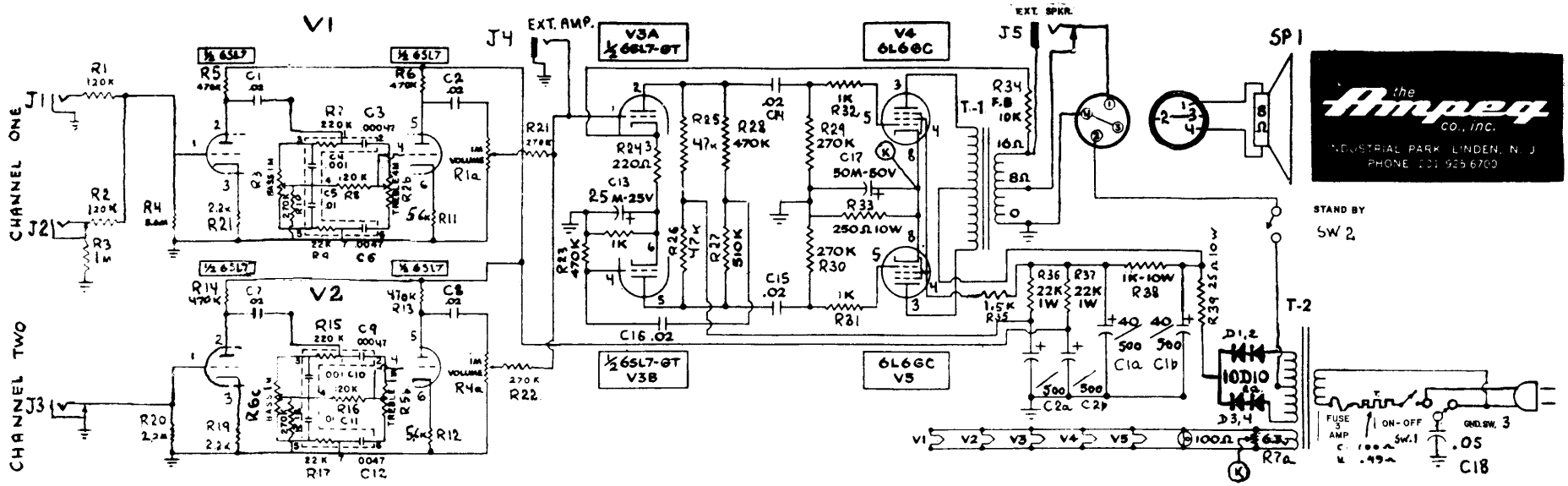

MODEL B-12NB, B-15NB

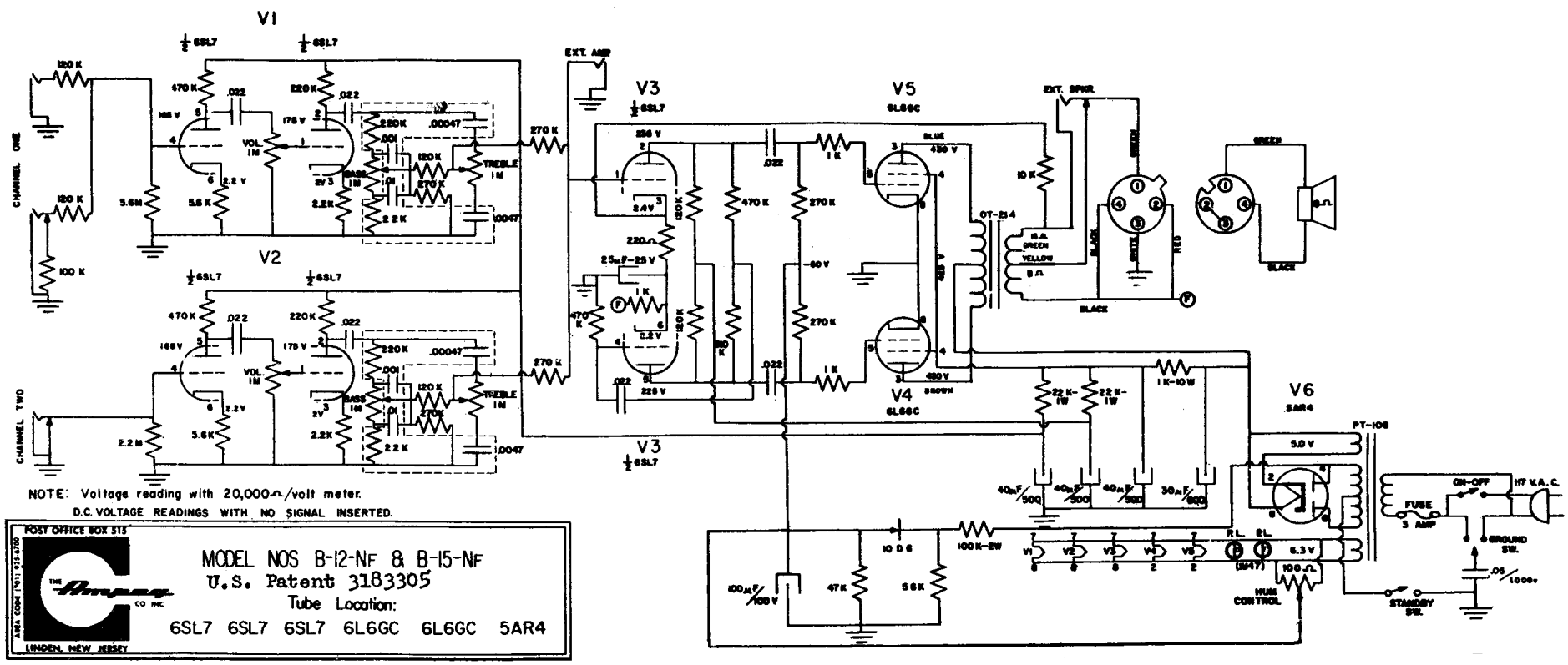
V1
V2
V3
V4
V5
V6
CHANNEL ONE
CHANNEL TWO
EXT. AMP
EXT. SPKR.
VOL 1M
BASS 1M
TREBLE 1M
OT-214
PT-108
FUSE 3 AMP
ON-OFF
117 V.A.C.
GROUND SW.
STANDBY SW.
HUM CONTROL
NOTE: Voltage reading with 20,000Ω/volt meter.
D.C. VOLTAGE READINGS WITH NO SIGNAL INSERTED.
POST OFFICE BOX 515
LINDEN, NEW JERSEY
MODEL NOS B-12-NF & B-15-NF
U.S. Patent 3183305
Tube Location:
6SL7 6SL7 6SL7 6L6GC 6L6GC 5AR4

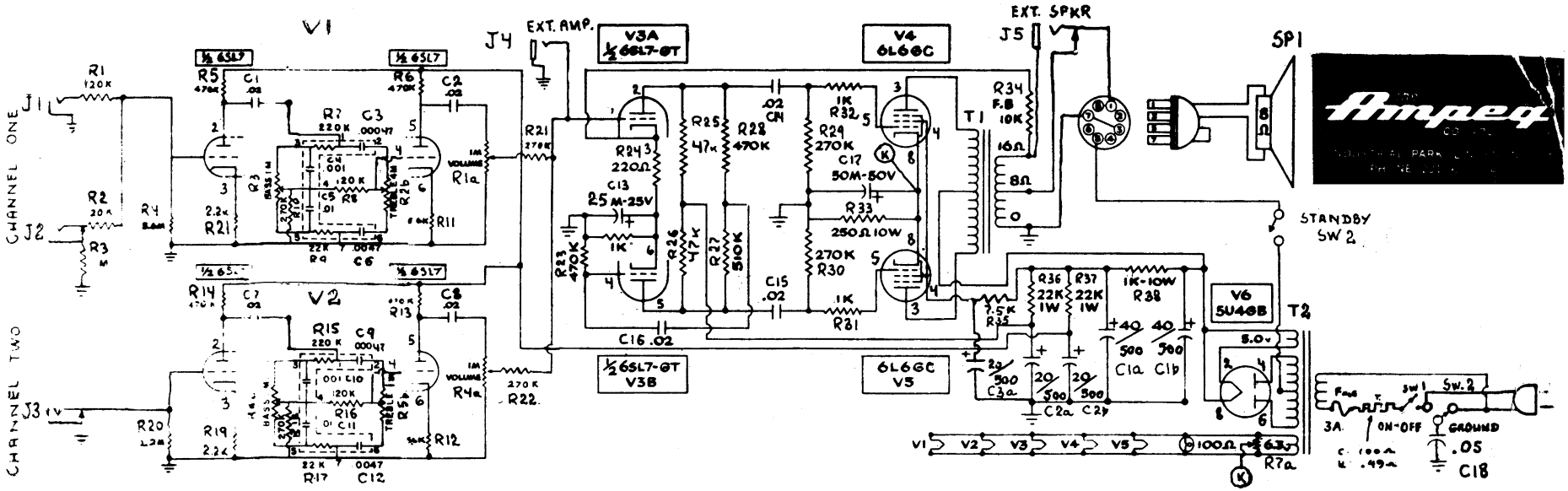
CHANNEL ONE
CHANNEL TWO
V1
V2
V3A
½ 6SL7-GT
V3B
V4
6L6GC
V5
V6
5U4GB
J1
J2
J3
J4
J5
EXT. AMP.
EXT. SPKR
SP1
STANDBY
SW2
T1
T2
R1 120K
R2 20K
R3 M
R4 2.2M
R5 470K
R6 470K
R7 220K
R8 120K
R9 22K
R10 270K
R11 6.8K
R12 6.8K
R13 470K
R14 470K
R15 220K
R16 120K
R17 22K
R19 2.2K
R20 2.2M
R21 2.2K
R22 270K
R23 470K
R24 220Ω
R25 47K
R26 47K
R27 510K
R28 470K
R29 270K
R30 270K
R31 1K
R32 1K
R33 250Ω 10W
R34 F.B 10K
R35 7.5K
R36 22K 1W
R37 22K 1W
R38 1K-10W
R1a 1M VOLUME
R4a 1M VOLUME
R7a 63K
C1 .02
C2 .02
C3 .00047
C4 .001
C5 .01
C6 .0047
C7 .02
C8 .02
C9 .00047
C10 .001
C11 .01
C12 .0047
C13 25M-25V
C15 .02
C16 .02
C17 50M-50V
C18 .05
C1a 500
C1b 500
C2a 20 500
C2b 20 500
C3a 20 500
5.0V
3A
ON-OFF
GROUND
SW.1
SW.2
V1 V2 V3 V4 V5
100Ω
MODEL B-12N & B-15N

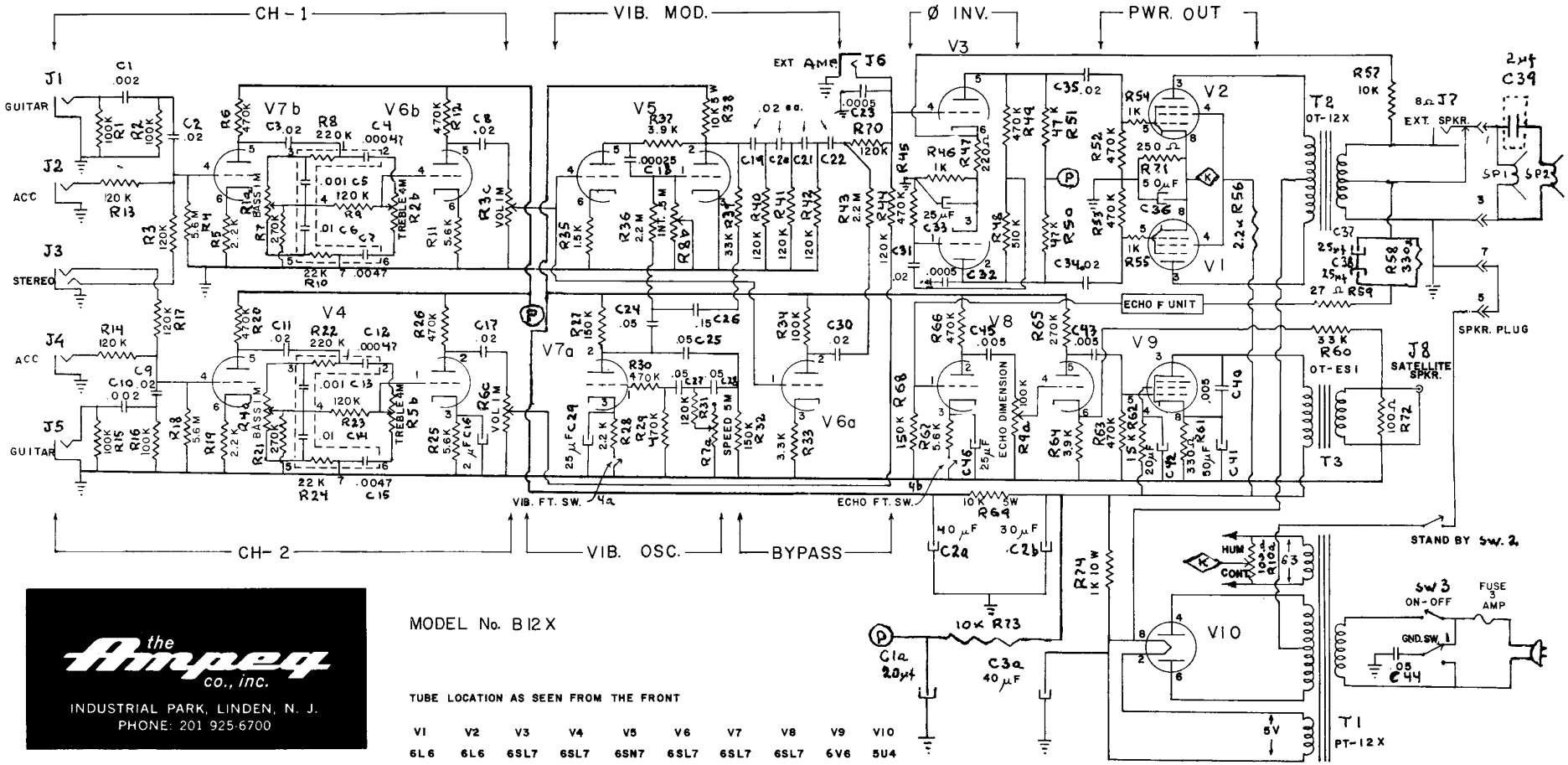

the Ampeg co., inc.
INDUSTRIAL PARK, LINDEN, N. J.
PHONE: 201 925-6700

MODEL No. B12X

TUBE LOCATION AS SEEN FROM THE FRONT

V1	V2	V3	V4	V5	V6	V7	V8	V9	V10
6L6	6L6	6SL7	6SL7	6SN7	6SL7	6SL7	6SL7	6V6	5U4

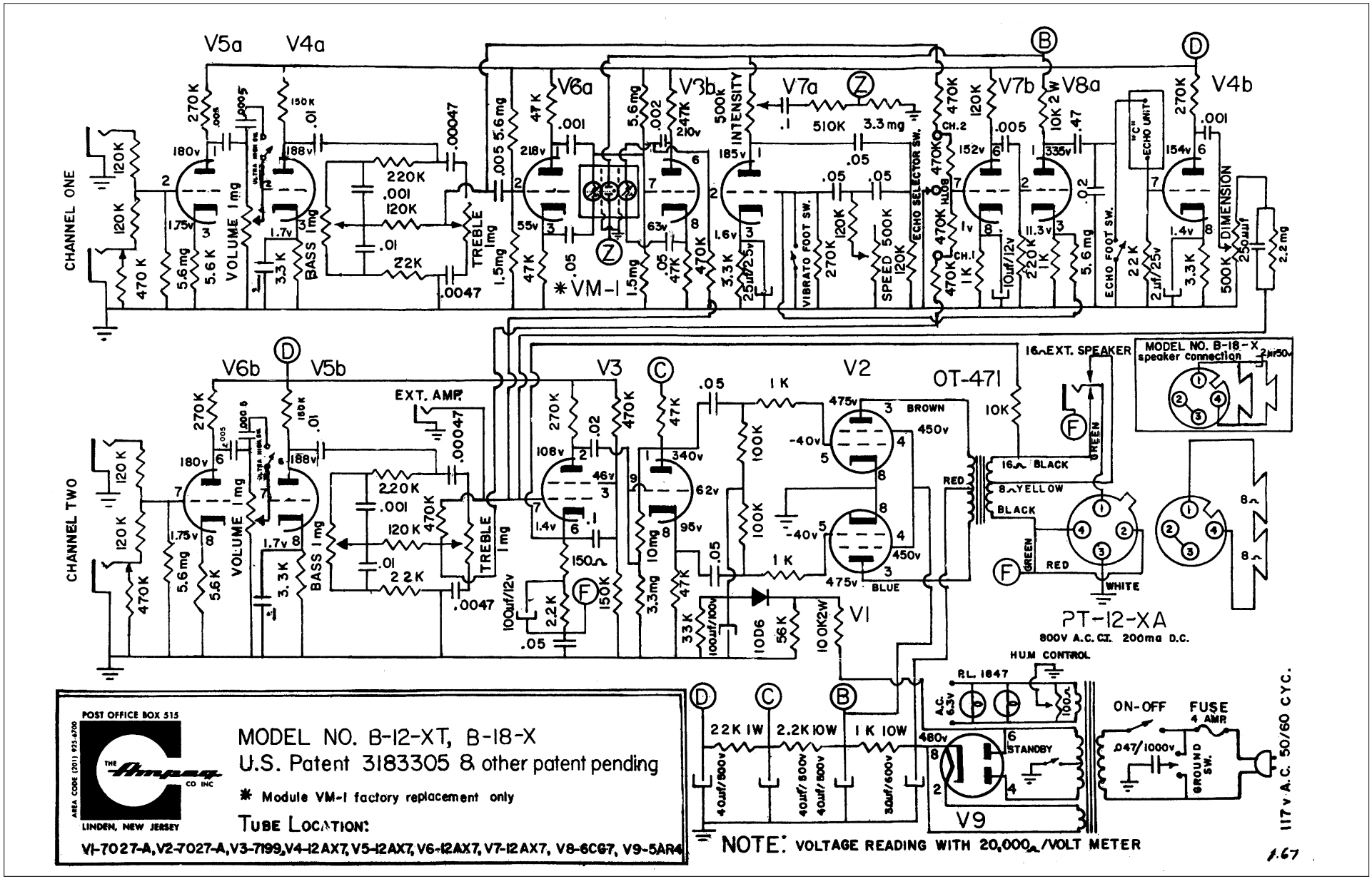
CHANNEL ONE
CHANNEL TWO
V5a
V4a
V6a
V3b
V7a
V7b
V8a
V4b
V6b
V5b
V3
V2
V1
V9
OT-471
VOLUME 1mg
BASS 1mg
TREBLE 1mg
INTENSITY
VIBRATO FOOT SW.
SPEED
ECHO SELECTOR SW.
ECHO FOOT SW.
ECHO UNIT
DIMENSION
EXT. AMP.
16Ω EXT. SPEAKER
MODEL NO. B-18-X speaker connection
* VM-1
PT-12-XA
800V A.C. CT. 200ma D.C.
HUM CONTROL
R.L. 1847
STANDBY
ON-OFF
FUSE 4 AMP
GROUND SW.
117 v A.C. 50/60 CYC.
POST OFFICE BOX 515
THE Ampeg CO INC
LINDEN, NEW JERSEY
MODEL NO. B-12-XT, B-18-X
U.S. Patent 3183305 & other patent pending
* Module VM-1 factory replacement only
TUBE LOCATION:
V1-7027-A, V2-7027-A, V3-7199, V4-12AX7, V5-12AX7, V6-12AX7, V7-12AX7, V8-6CG7, V9-5AR4
NOTE: VOLTAGE READING WITH 20,000Ω/VOLT METER

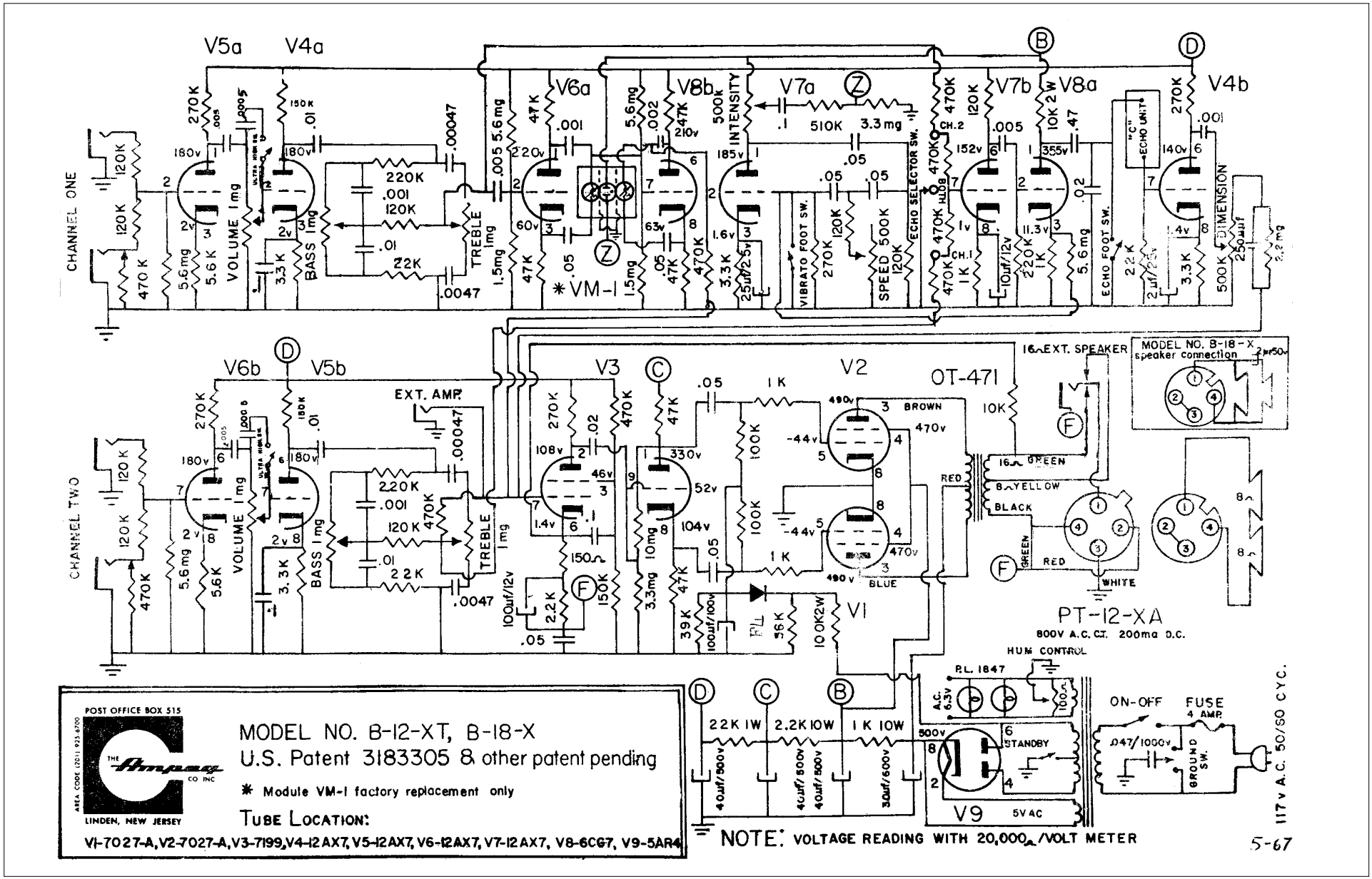
V5a
V4a
V6a
V8b
V7a
V7b
V8a
V4b
CHANNEL ONE
VOLUME 1mg
BASS 1mg
TREBLE 1mg
INTENSITY
VIBRATO FOOT SW.
SPEED
ECHO SELECTOR SW.
ECHO FOOT SW.
"C" ECHO UNIT
DIMENSION
*VM-1
V6b
V5b
V3
V2
OT-471
CHANNEL TWO
EXT. AMP.
16Ω EXT. SPEAKER
MODEL NO. B-18-X speaker connection
PT-12-XA
800V A.C.CT. 200ma D.C.
HUM CONTROL
P.L. 1847
ON-OFF
FUSE 4 AMP.
GROUND SW.
STANDBY
V9
5V AC
V1
117 v A.C. 50/60 CYC.
POST OFFICE BOX 515
AREA CODE (201) 925-6700
THE Ampeg CO INC
LINDEN, NEW JERSEY
MODEL NO. B-12-XT, B-18-X
U.S. Patent 3183305 & other patent pending
* Module VM-1 factory replacement only
TUBE LOCATION:
V1-7027-A, V2-7027-A, V3-7199, V4-12AX7, V5-12AX7, V6-12AX7, V7-12AX7, V8-6CG7, V9-5AR4
NOTE: VOLTAGE READING WITH 20,000Ω/VOLT METER
5-67

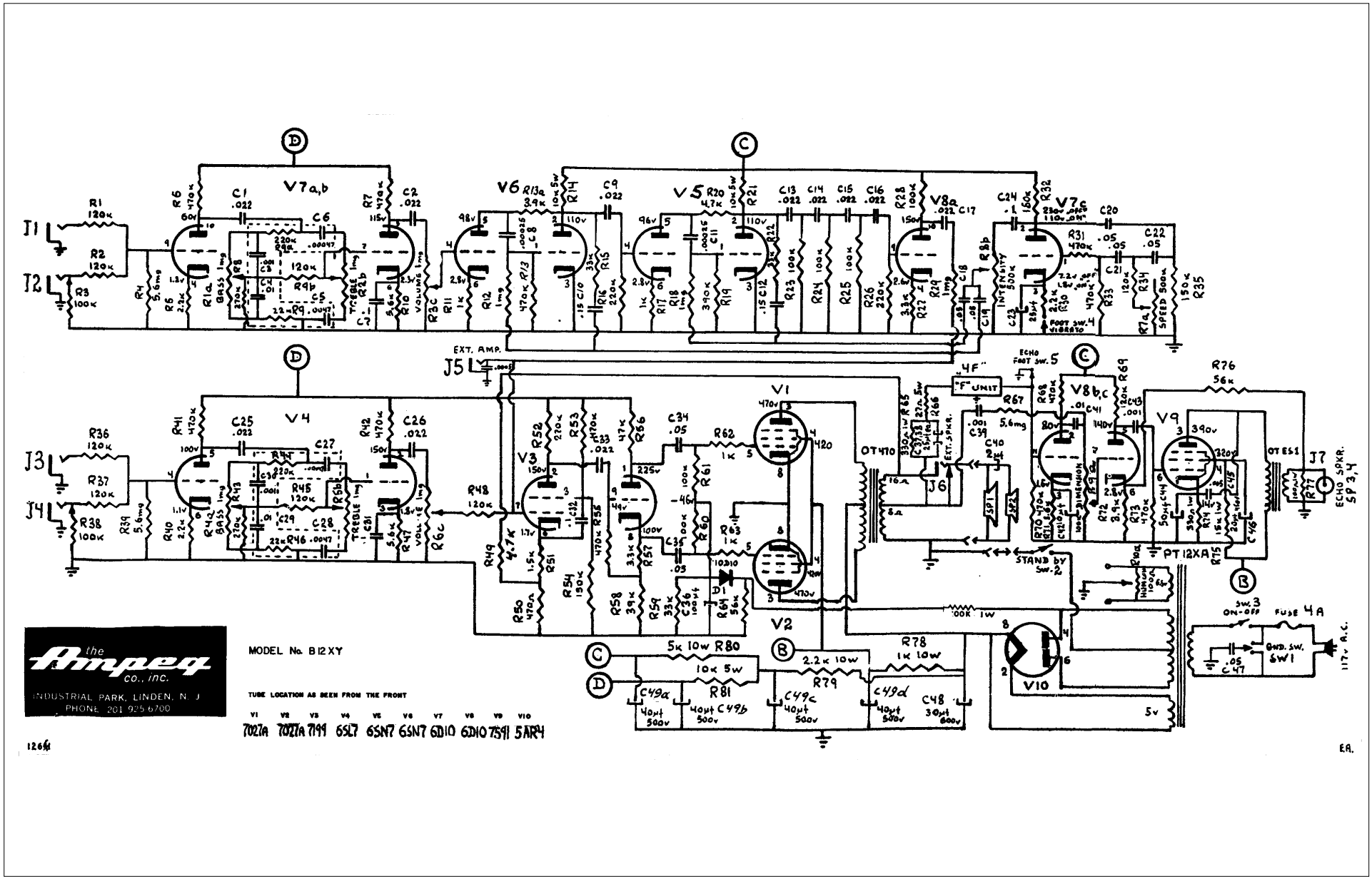
the Ampeg co., inc.
INDUSTRIAL PARK, LINDEN, N. J.
PHONE 201 925 6700
MODEL No. B12XY
TUBE LOCATION AS SEEN FROM THE FRONT
V1 V2 V3 V4 V5 V6 V7 V8 V9 V10
7027A 7027A 7199 6SL7 6SN7 6SN7 6DJ10 6DJ10 7591 5AR4
EXT. AMP.
ECHO FOOT SW. 5
STAND BY SW. 2
FOOT SW. 4
SW. 3 ON-OFF
FUSE 4A
GND. SW. SW1
117v A.C.
ECHO SPKR. SP 3,4
PT 12XA
OT 470
OT ES1
EA.

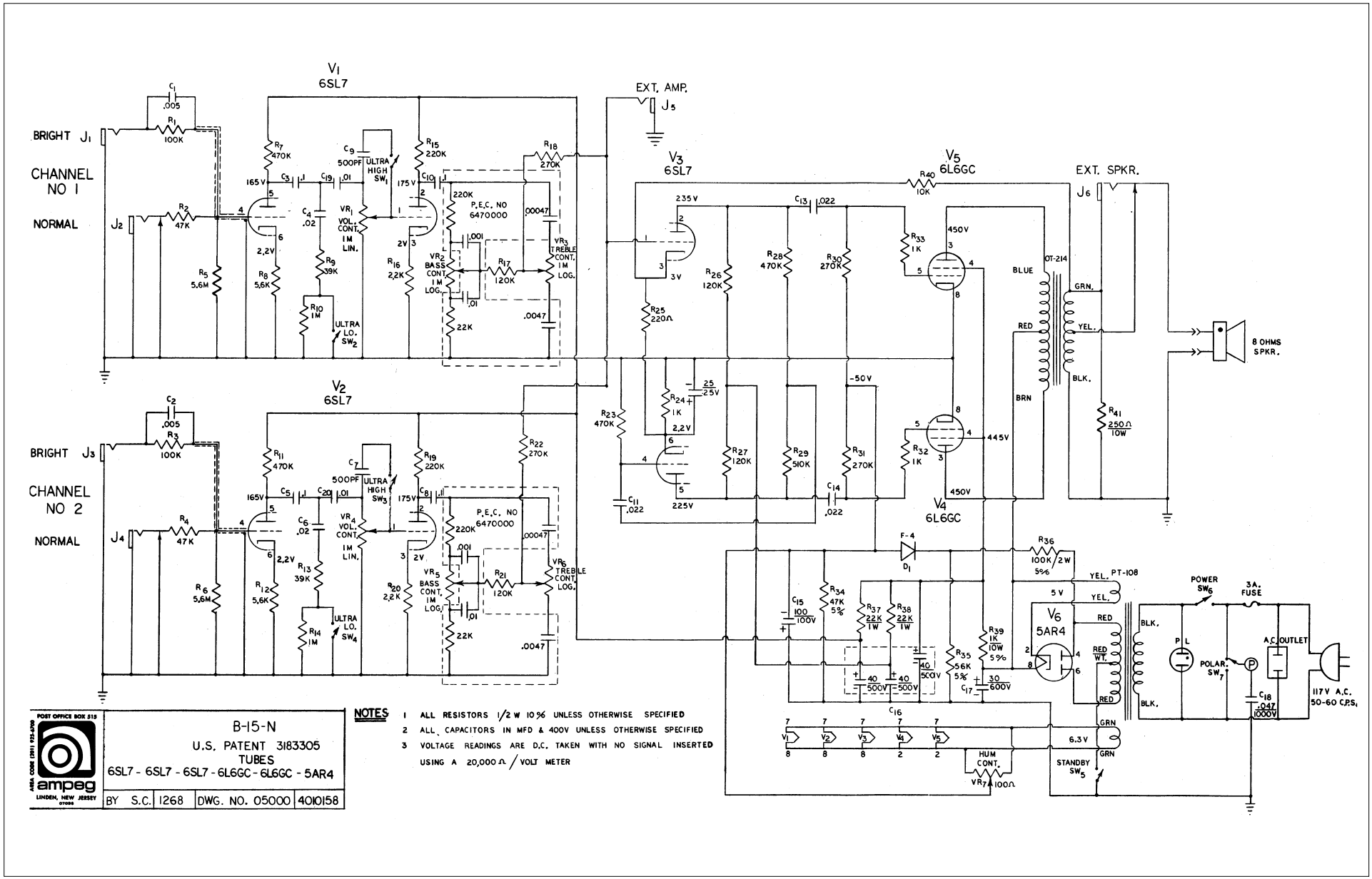

NOTES

1. ALL RESISTORS 1/2 W 10% UNLESS OTHERWISE SPECIFIED
2. ALL CAPACITORS IN MFD & 400V UNLESS OTHERWISE SPECIFIED
3. VOLTAGE READINGS ARE D.C. TAKEN WITH NO SIGNAL INSERTED USING A 20,000 Ω / VOLT METER

B-15S **(REV C)**

Ampeg

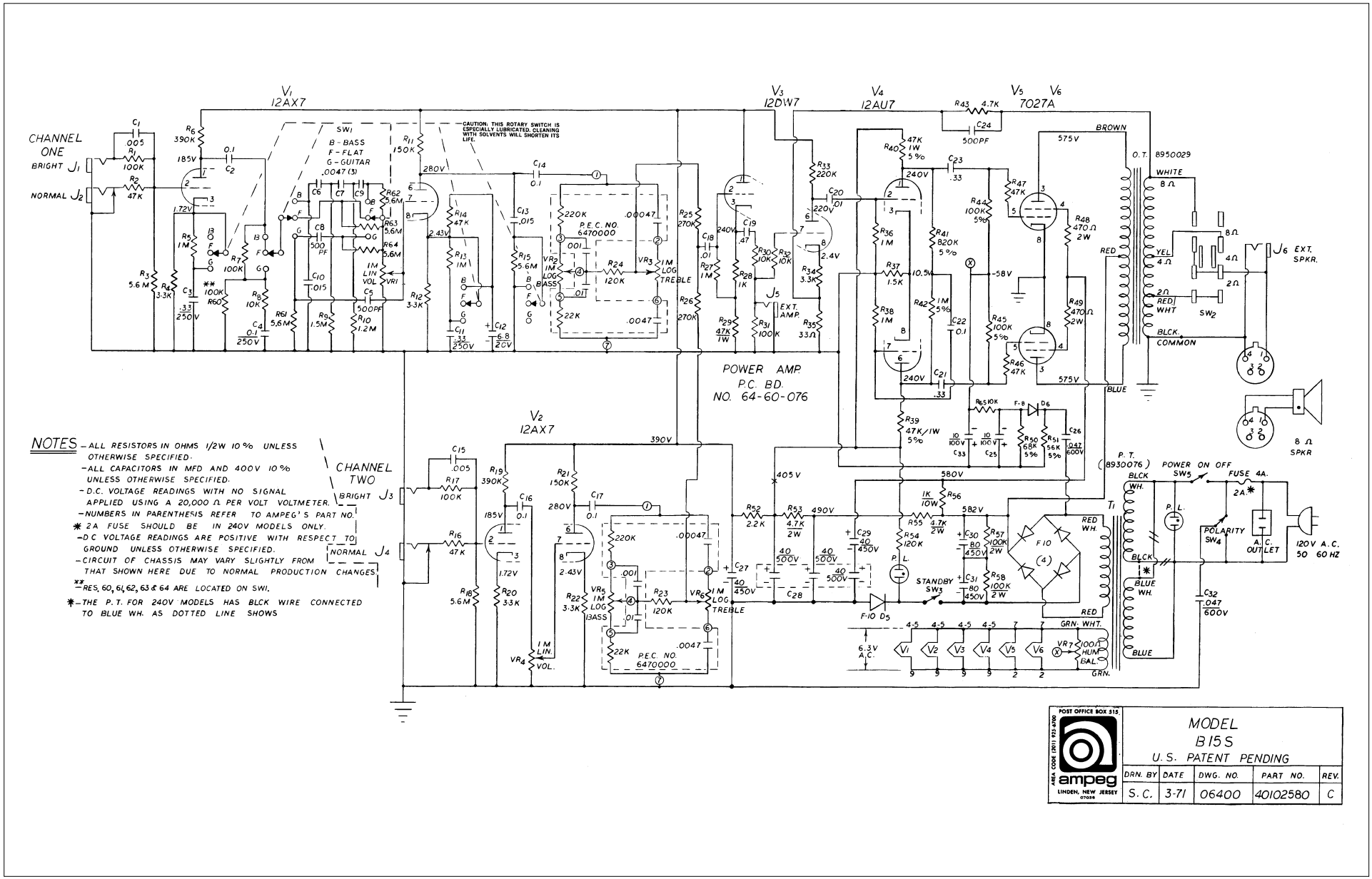

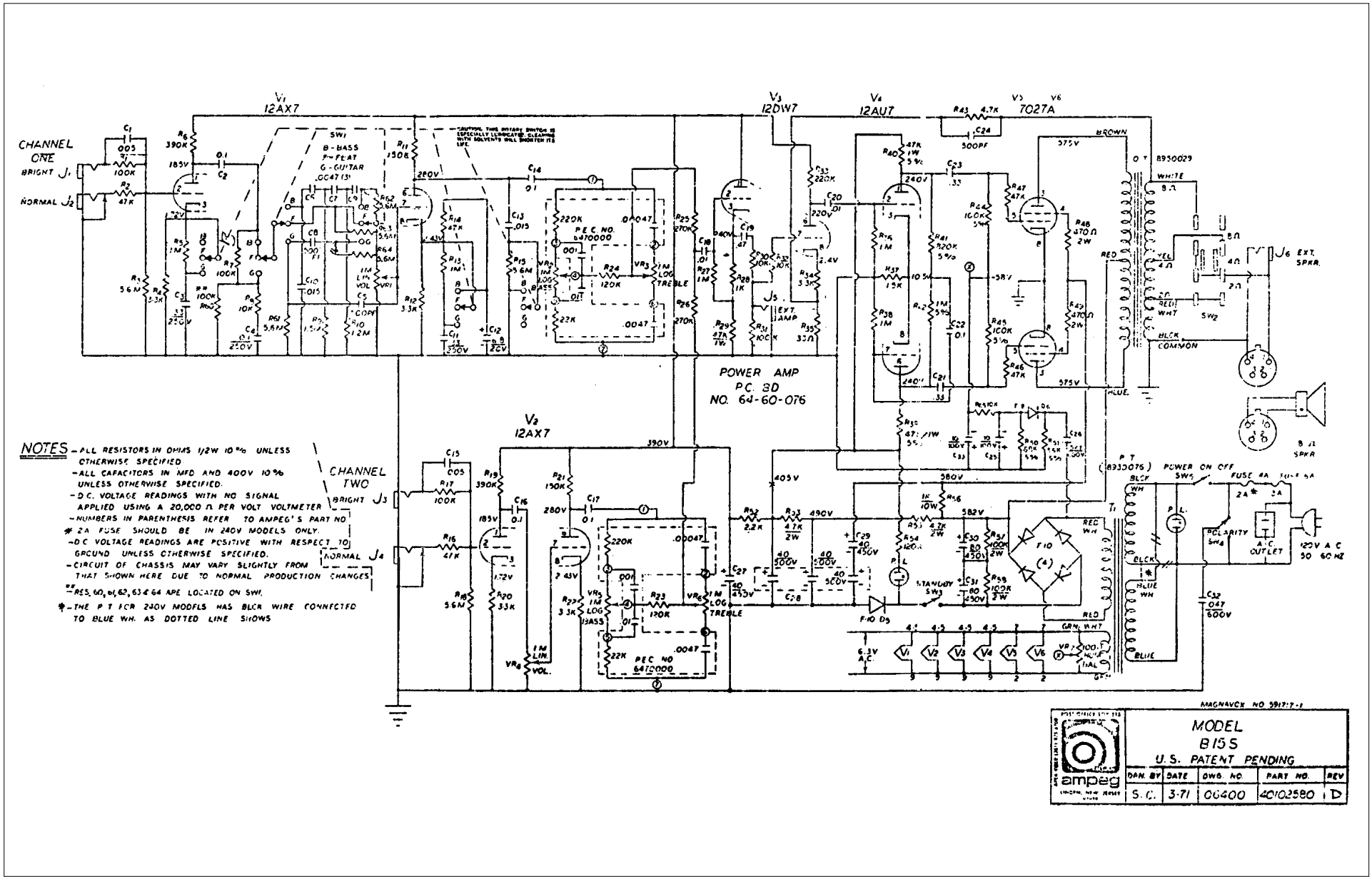
CHANNEL ONE
BRIGHT J1
NORMAL J2
V1 12AX7
V2 12AX7
V3 12DW7
V4 12AU7
V5 V6 7027A
SW1
B-BASS
F-FEAT
G-GUITAR
P.E.C. NO. 6470000
TREBLE
BASS
VOL.
J5 EXT. AMP
POWER AMP
P.C. 3D
NO. 64-60-076
CHANNEL TWO
BRIGHT J3
NORMAL J4
J6 EXT. SPKR.
8 Ω SPKR
P.T. (8933076)
POWER ON OFF SW5
FUSE 4A
2A*
3A
POLARITY SW4
A.C. OUTLET
120V A.C. 50 60 HZ
STANDBY SW3
F10 D5
NOTES
- ALL RESISTORS IN OHMS 1/2W 10% UNLESS OTHERWISE SPECIFIED.
- ALL CAPACITORS IN MFD AND 400V 10% UNLESS OTHERWISE SPECIFIED.
- D.C. VOLTAGE READINGS WITH NO SIGNAL APPLIED USING A 20,000 Ω PER VOLT VOLTMETER
- NUMBERS IN PARENTHESIS REFER TO AMPEG'S PART NO.
2A FUSE SHOULD BE IN 240V MODELS ONLY.
- D.C. VOLTAGE READINGS ARE POSITIVE WITH RESPECT TO GROUND UNLESS OTHERWISE SPECIFIED.
- CIRCUIT OF CHASSIS MAY VARY SLIGHTLY FROM THAT SHOWN HERE DUE TO NORMAL PRODUCTION CHANGES.
** RES. 60, 61, 62, 63 & 64 ARE LOCATED ON SW1.
* - THE P.T. FOR 240V MODELS HAS BLCK WIRE CONNECTED TO BLUE WH. AS DOTTED LINE SHOWS
MAGNAVOX NO. 5917:7-1
MODEL
B15S
U.S. PATENT PENDING
ampeg
DRN. BY S.C.
DATE 3-71
DWG. NO. 06400
PART NO. 401102580
REV D

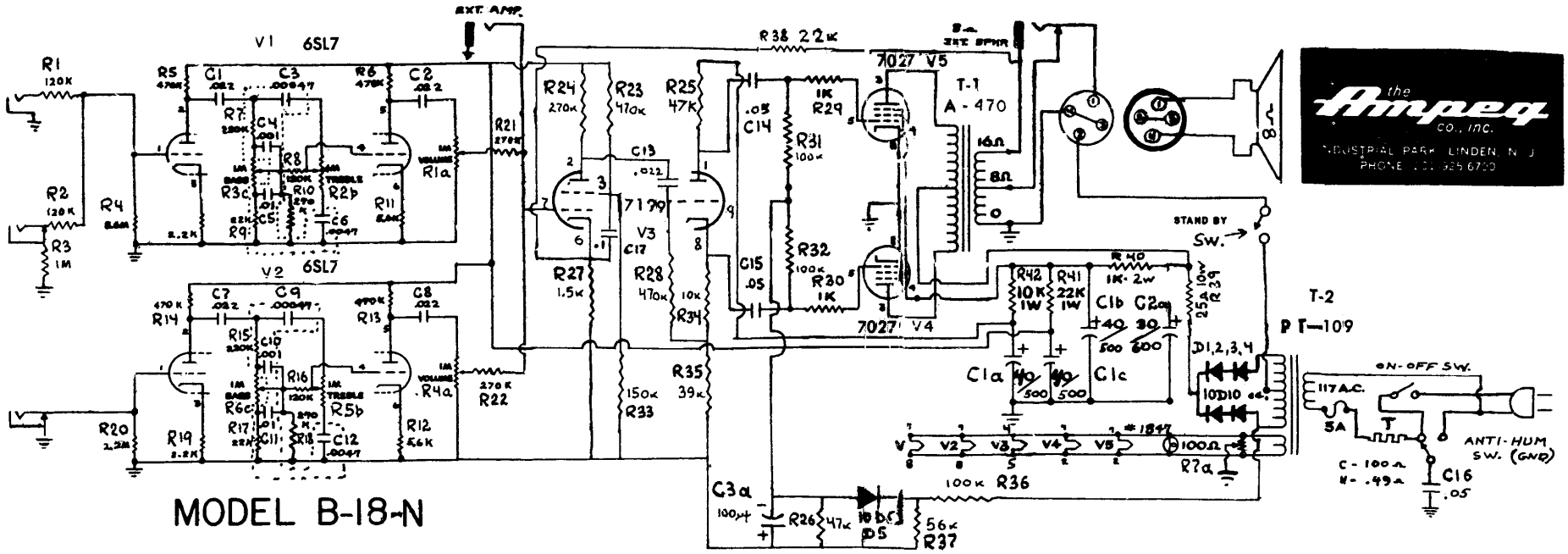
MODEL B-18-N
V1 6SL7
V2 6SL7
V3 7199
V4 7027
V5 7027
T-1 A-470
T-2 PT-109
the Ampeg CO., INC.
INDUSTRIAL PARK LINDEN, N. J.
PHONE
EXT. AMP.
STAND BY SW.
ON-OFF SW.
117 A.C.
ANTI-HUM SW. (GND)
R1 120K
R2 120K
R3 1M
R4 8.6M
R5 470K
R6 470K
R7 220K
R8 120K
R9 2.2K
R10 270K
R11 8.6K
R12 5.6K
R13 470K
R14 470K
R15 220K
R16 120K
R17 22K
R18 270K
R19 2.2K
R20 2.2K
R21 270K
R22 270K
R23 470K
R24 270K
R25 47K
R26 47K
R27 1.5K
R28 470K
R29 1K
R30 1K
R31 100K
R32 100K
R33 150K
R34 10K
R35 39K
R36 100K
R37 56K
R38 22K
R39 25A 10W
R40 1K 2W
R41 22K 1W
R42 10K 1W
C1 .022
C2 .022
C3 .00047
C4 .001
C5 .01
C6 .0047
C7 .022
C8 .022
C9 .00047
C10 .001
C11 .01
C12 .0047
C13 .022
C14 .05
C15 .05
C16 .05
C17
C1a 40 500
C1b 40 500
C1c 40 500
C2 30 600
C3a 100μf
D1,2,3,4
10D10
D5 10D5
R7a 100Ω
R3c BASS 1M
R2b TREBLE 1M
R1a VOLUME 1M
R6c BASS 1M
R5b TREBLE 1M
R4a VOLUME 1M
5A
T
C - 100Ω
R - .49Ω

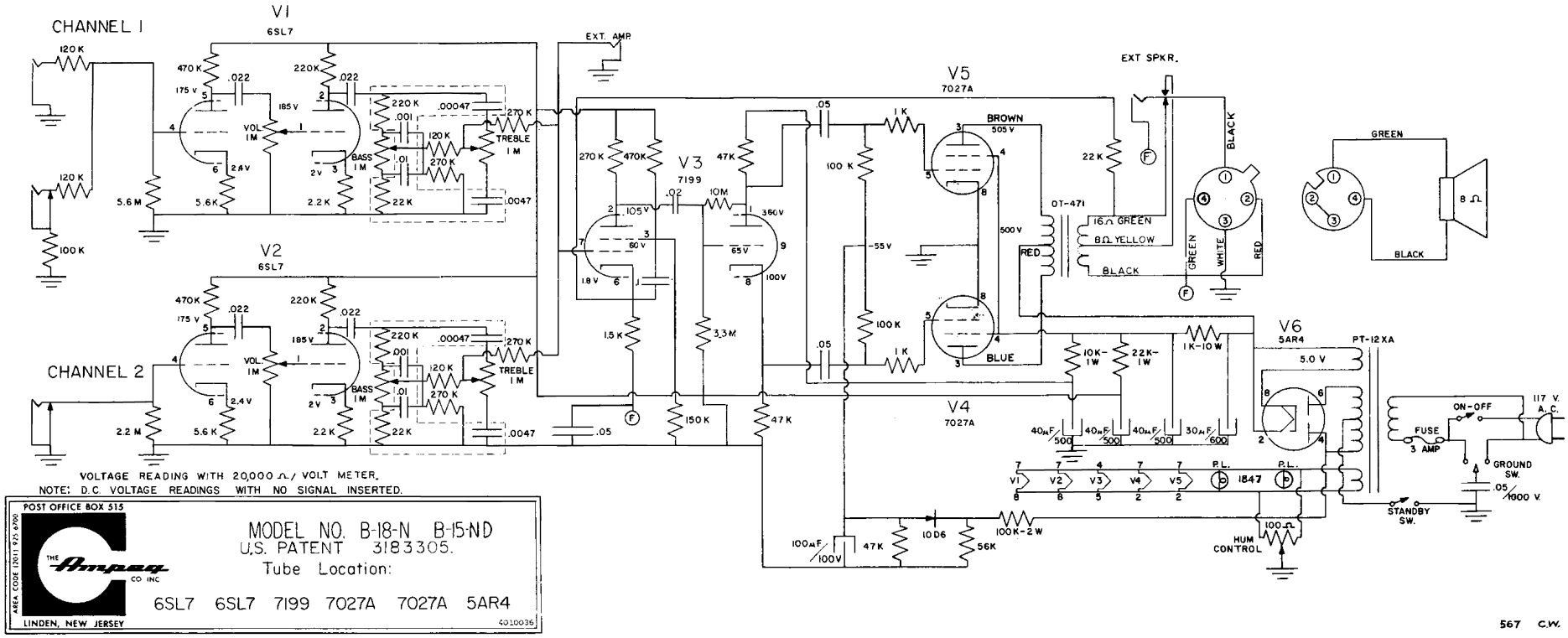
CHANNEL 1
V1
6SL7
120 K
470 K
.022
175 V
185 V
220 K
.00047
.001
120 K
270 K
VOL. 1M
TREBLE 1M
BASS 1M
.01
2.4 V
2 V
5.6 M
5.6 K
2.2 K
22 K
.0047
100 K
V2
6SL7
CHANNEL 2
2.2 M
EXT. AMP.
V3
7199
270 K
470K
.105 V
60 V
1.8 V
.02
10M
360 V
65 V
100 V
47K
1.5 K
3.3M
150 K
.05
V5
7027A
1 K
100 K
-55 V
BROWN
505 V
500 V
RED
BLUE
V4
7027A
OT-471
16Ω GREEN
8Ω YELLOW
BLACK
EXT SPKR.
22 K
BLACK
GREEN
WHITE
RED
8 Ω
V6
5AR4
5.0 V
PT-12XA
10K-1W
22K-1W
1K-10W
40μF/500
30μF/600
P.L.
1847
V1
V2
V3
V4
V5
ON-OFF
FUSE
3 AMP
117 V. A.C.
GROUND SW.
.05/1000 V.
STANDBY SW.
HUM CONTROL
100Ω
100K-2W
10D6
56K
100μF/100V
VOLTAGE READING WITH 20,000 Ω/VOLT METER.
NOTE: D.C. VOLTAGE READINGS WITH NO SIGNAL INSERTED.
POST OFFICE BOX 515
AREA CODE (201) 925 8700
THE Ampeg CO INC
LINDEN, NEW JERSEY
MODEL NO. B-18-N B-15-ND
U.S. PATENT 3183305.
Tube Location:
6SL7 6SL7 7199 7027A 7027A 5AR4
4010036
567 C.W.

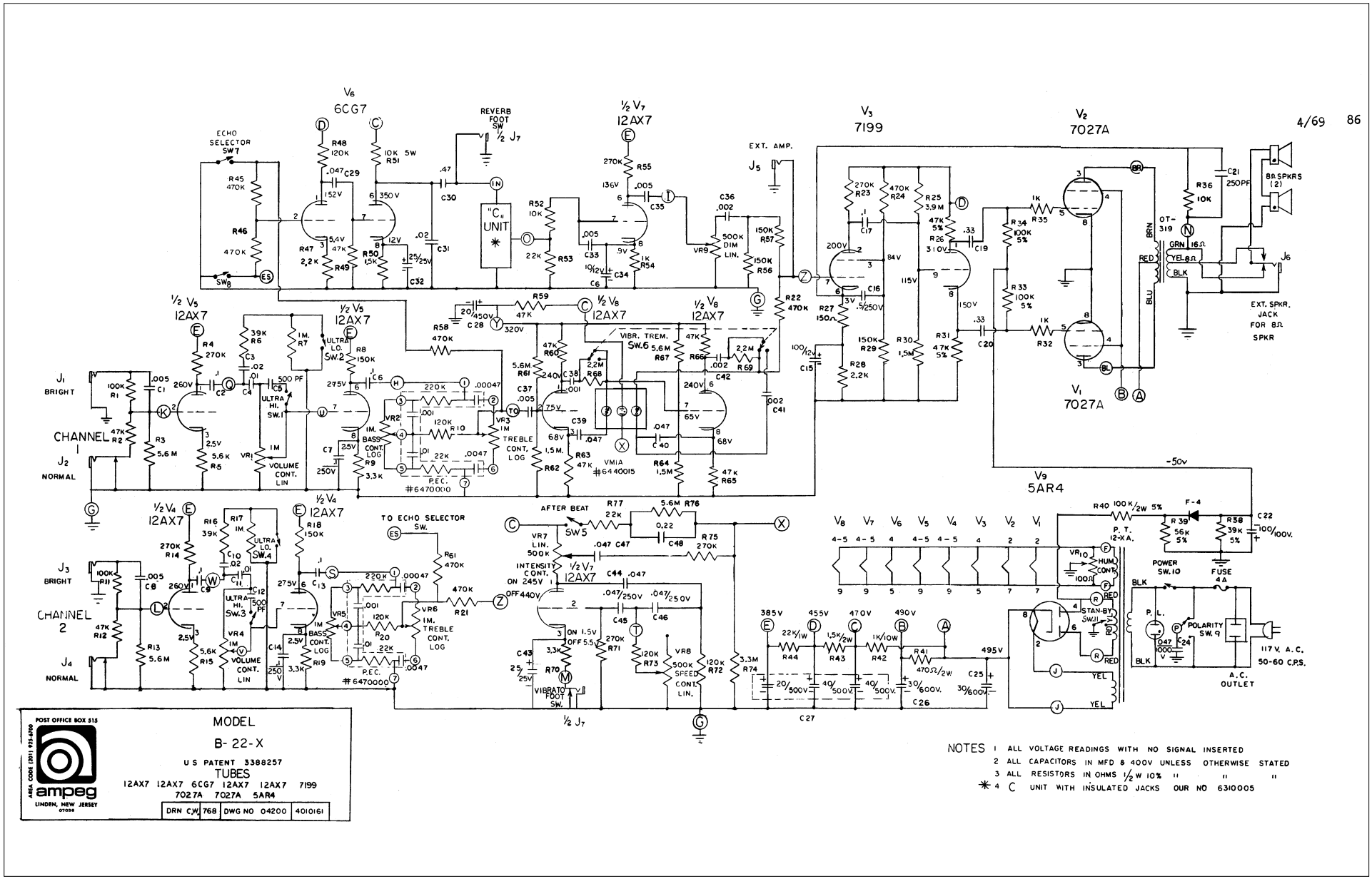
4/69 86
V6 6CG7
½ V7 12AX7
V3 7199
V2 7027A
V1 7027A
V9 5AR4
½ V5 12AX7
½ V8 12AX7
½ V4 12AX7
ECHO SELECTOR SW7
REVERB FOOT SW ½ J7
EXT. AMP. J5
"C" UNIT
CHANNEL 1
CHANNEL 2
J1 BRIGHT
J2 NORMAL
J3 BRIGHT
J4 NORMAL
ULTRA LO. SW.2
ULTRA HI. SW.1
ULTRA HI. SW.3
ULTRA LO. SW.4
VOLUME CONT. LIN
BASS CONT. LOG
TREBLE CONT. LOG
P.E.C. #6470000
VIBR. TREM. SW.6
VMIA #6440015
TO ECHO SELECTOR SW.
AFTER BEAT SW5
INTENSITY CONT. ON 245V OFF 440V
VIBRATO FOOT SW.
SPEED CONT. LIN.
8Ω SPKRS (2)
OT-319
EXT. SPKR. JACK FOR 8Ω SPKR
-50V
P.T. 12-XA.
HUM CONT.
POWER SW.10
FUSE 4A
STAND-BY SW.11
POLARITY SW.9
P.L.
117 V. A.C. 50-60 C.P.S.
A.C. OUTLET
POST OFFICE BOX 515
AREA CODE (201) 925-6700
ampeg
LINDEN, NEW JERSEY 07036
MODEL
B-22-X
U S PATENT 3388257
TUBES
12AX7 12AX7 6CG7 12AX7 12AX7 7199
7027A 7027A 5AR4
DRN C.W. 768
DWG NO 04200
4010161
NOTES 1 ALL VOLTAGE READINGS WITH NO SIGNAL INSERTED
2 ALL CAPACITORS IN MFD & 400V UNLESS OTHERWISE STATED
3 ALL RESISTORS IN OHMS ½W 10% " " "
✱ 4 C UNIT WITH INSULATED JACKS OUR NO 6310005

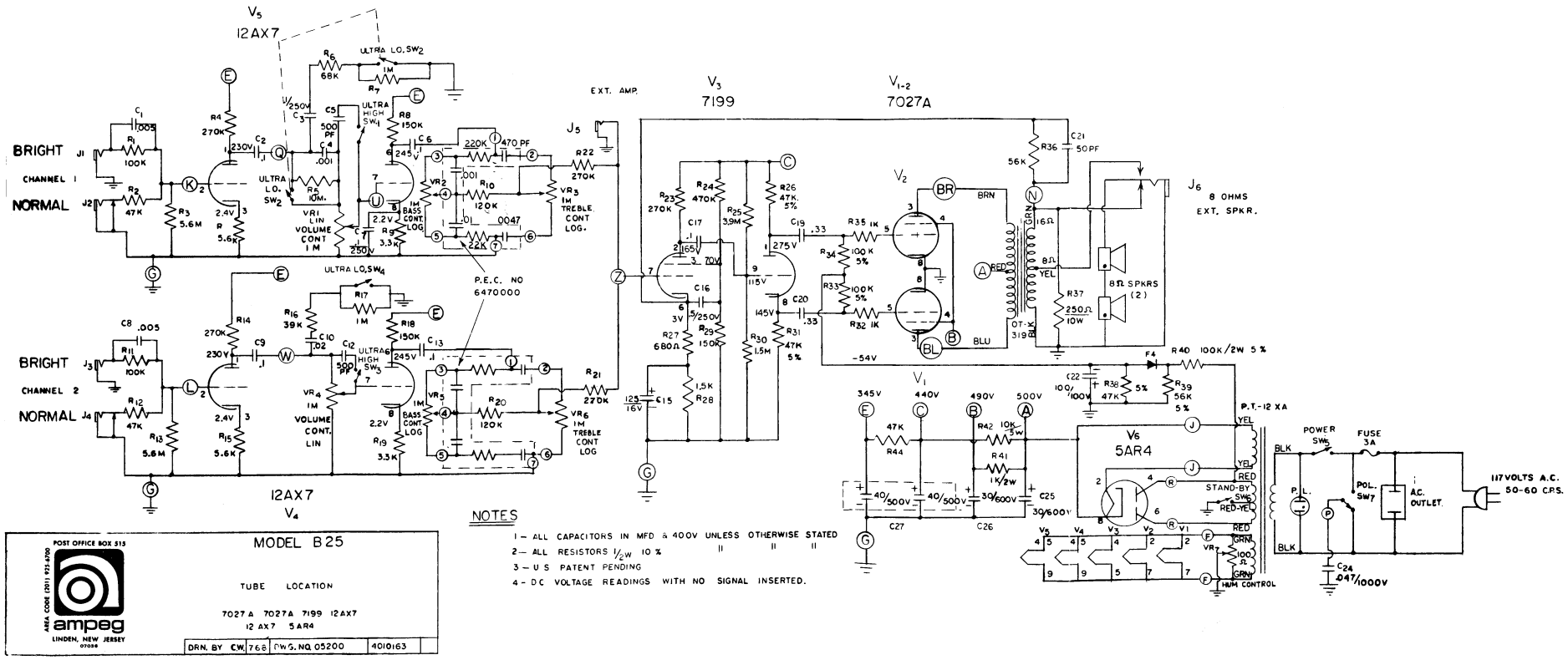

NOTES

1 – ALL CAPACITORS IN MFD & 400V UNLESS OTHERWISE STATED
2 – ALL RESISTORS 1/2W 10 % " " "
3 – U S PATENT PENDING
4 – DC VOLTAGE READINGS WITH NO SIGNAL INSERTED.

POST OFFICE BOX 515
AREA CODE (201) 925-8700
ampeg
LINDEN, NEW JERSEY 07036

MODEL B25

TUBE LOCATION

7027A 7027A 7199 12AX7
12AX7 5AR4

DRN. BY CW.	768	DWG. NO. 05200	4010163

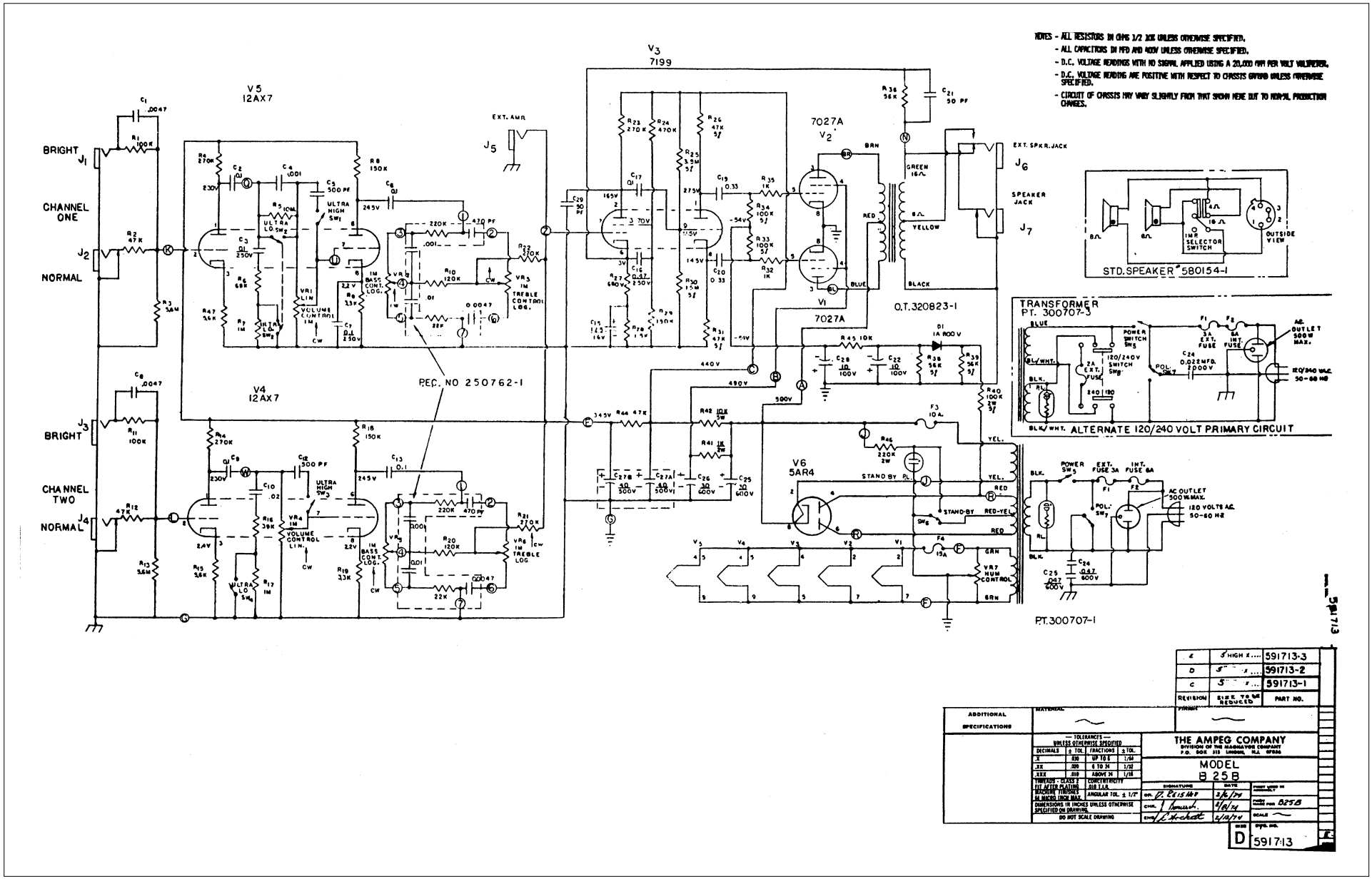
NOTES - ALL RESISTORS IN OHMS 1/2 WATT UNLESS OTHERWISE SPECIFIED.
- ALL CAPACITORS IN MFD AND 400V UNLESS OTHERWISE SPECIFIED.
- D.C. VOLTAGE READINGS WITH NO SIGNAL APPLIED USING A 20,000 OHM PER VOLT VOLTMETER.
- D.C. VOLTAGE READING ARE POSITIVE WITH RESPECT TO CHASSIS GROUND UNLESS OTHERWISE SPECIFIED.
- CIRCUIT OF CHASSIS MAY VARY SLIGHTLY FROM THAT SHOWN HERE DUE TO NORMAL PRODUCTION CHANGES.
BRIGHT
CHANNEL ONE
NORMAL
CHANNEL TWO
V5 12AX7
V4 12AX7
V3 7199
7027A
V6 5AR4
EXT. AMP.
SPEAKER JACK
EXT. SPKR. JACK
REC. NO 250762-1
O.T.320823-1
STD. SPEAKER 580154-1
TRANSFORMER PT. 300707-3
ALTERNATE 120/240 VOLT PRIMARY CIRCUIT
120 VOLTS AC 50-60 HZ
PT.300707-1
THE AMPEG COMPANY
MODEL B 25B
591713-3
591713-2
591713-1
PART NO.
D 591713

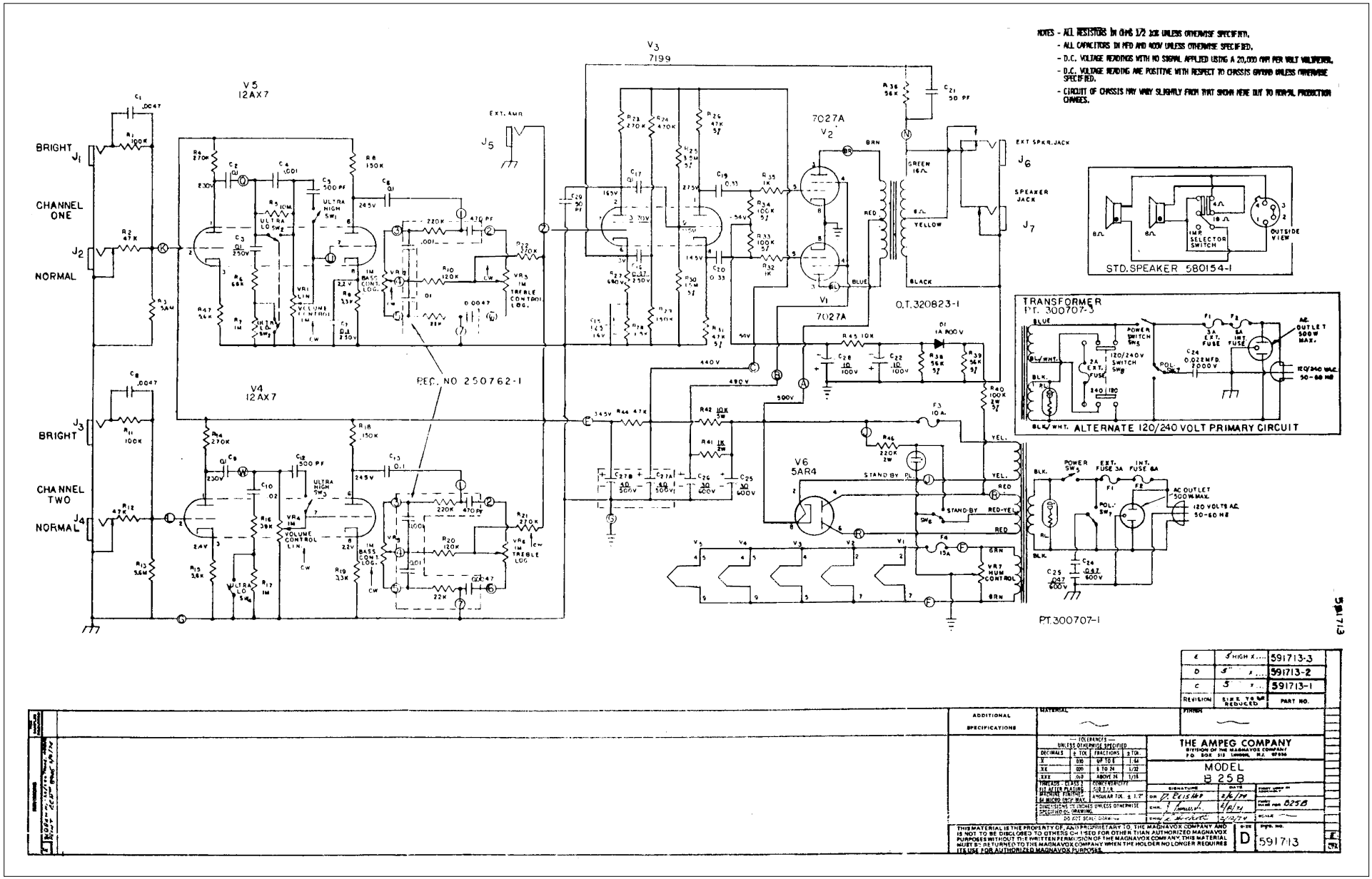
NOTES - ALL RESISTORS IN OHMS 1/2 20% UNLESS OTHERWISE SPECIFIED.
- ALL CAPACITORS IN MFD AND 400V UNLESS OTHERWISE SPECIFIED.
- D.C. VOLTAGE READINGS WITH NO SIGNAL APPLIED USING A 20,000 OHM PER VOLT VOLTMETER.
- D.C. VOLTAGE READING ARE POSITIVE WITH RESPECT TO CHASSIS GROUND UNLESS OTHERWISE SPECIFIED.
- CIRCUIT OF CHASSIS MAY VARY SLIGHTLY FROM THAT SHOWN HERE DUE TO NORMAL PRODUCTION CHANGES.
BRIGHT
CHANNEL ONE
NORMAL
CHANNEL TWO
V5 12AX7
V4 12AX7
V3 7199
7027A V2
7027A V1
V6 5AR4
EXT. AMP.
EXT SPKR. JACK
SPEAKER JACK
O.T. 320823-1
REC. NO 250762-1
STD. SPEAKER 580154-1
IMP. SELECTOR SWITCH
OUTSIDE VIEW
TRANSFORMER PT. 300707-3
ALTERNATE 120/240 VOLT PRIMARY CIRCUIT
AC OUTLET 500W MAX.
120/240 VAC. 50-60 HZ
120 VOLTS AC. 50-60 HZ
PT. 300707-1
591713-3
591713-2
591713-1
THE AMPEG COMPANY
MODEL B 25B
591713

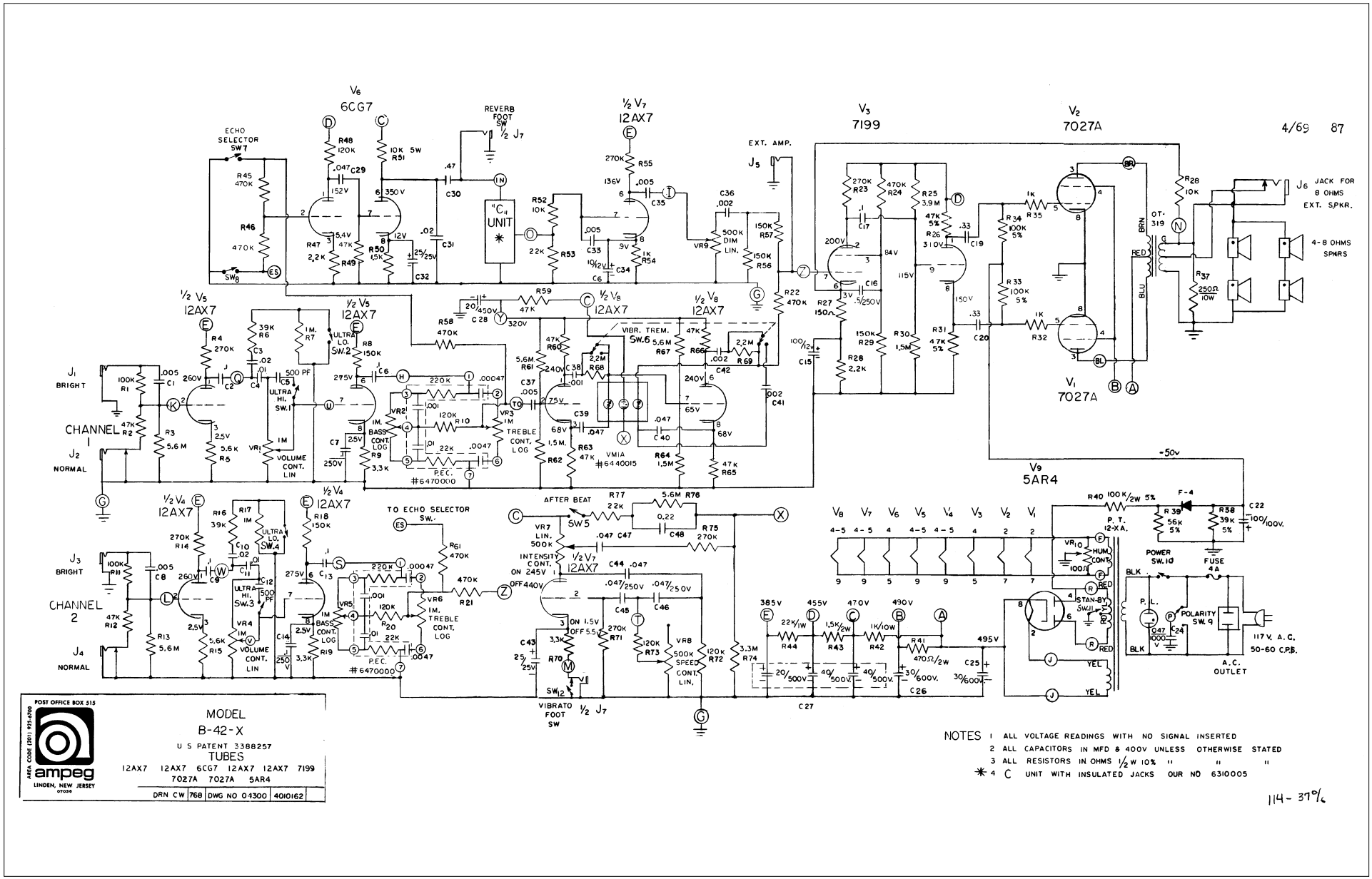
4/69 87
V6 6CG7
½ V7 12AX7
V3 7199
V2 7027A
V1 7027A
V9 5AR4
½ V5 12AX7
½ V8 12AX7
½ V4 12AX7
ECHO SELECTOR SW7
REVERB FOOT SW ½ J7
"C" UNIT
EXT. AMP. J5
J6 JACK FOR 8 OHMS EXT. SPKR.
4-8 OHMS SPKRS
OT-319
J1 BRIGHT
J2 NORMAL
CHANNEL 1
J3 BRIGHT
J4 NORMAL
CHANNEL 2
ULTRA LO. SW.2
ULTRA HI. SW.1
ULTRA LO. SW.4
ULTRA HI. SW.3
VOLUME CONT. LIN
BASS CONT. LOG
TREBLE CONT. LOG
P.E.C. #6470000
VIBR. TREM. SW.6
VMIA #6440015
TO ECHO SELECTOR SW.
AFTER BEAT SW5
INTENSITY CONT. ON 245V OFF 440V
VIBRATO FOOT SW ½ J7
SPEED CONT. LIN.
P.T. 12-X A.
HUM CONT.
STAN-BY SW.11
POWER SW.10
FUSE 4A
POLARITY SW.9
117 V. A.C. 50-60 C.P.S.
A.C. OUTLET
POST OFFICE BOX 515
AREA CODE (201) 925-6700
ampeg
LINDEN, NEW JERSEY 07036
MODEL
B-42-X
U S PATENT 3388257
TUBES
12AX7 12AX7 6CG7 12AX7 12AX7 7199
7027A 7027A 5AR4
DRN CW 768 DWG NO 04300 4010162
NOTES 1 ALL VOLTAGE READINGS WITH NO SIGNAL INSERTED
2 ALL CAPACITORS IN MFD & 400V UNLESS OTHERWISE STATED
3 ALL RESISTORS IN OHMS ½ W 10% " " "
4 C UNIT WITH INSULATED JACKS OUR NO 6310005
114-37%

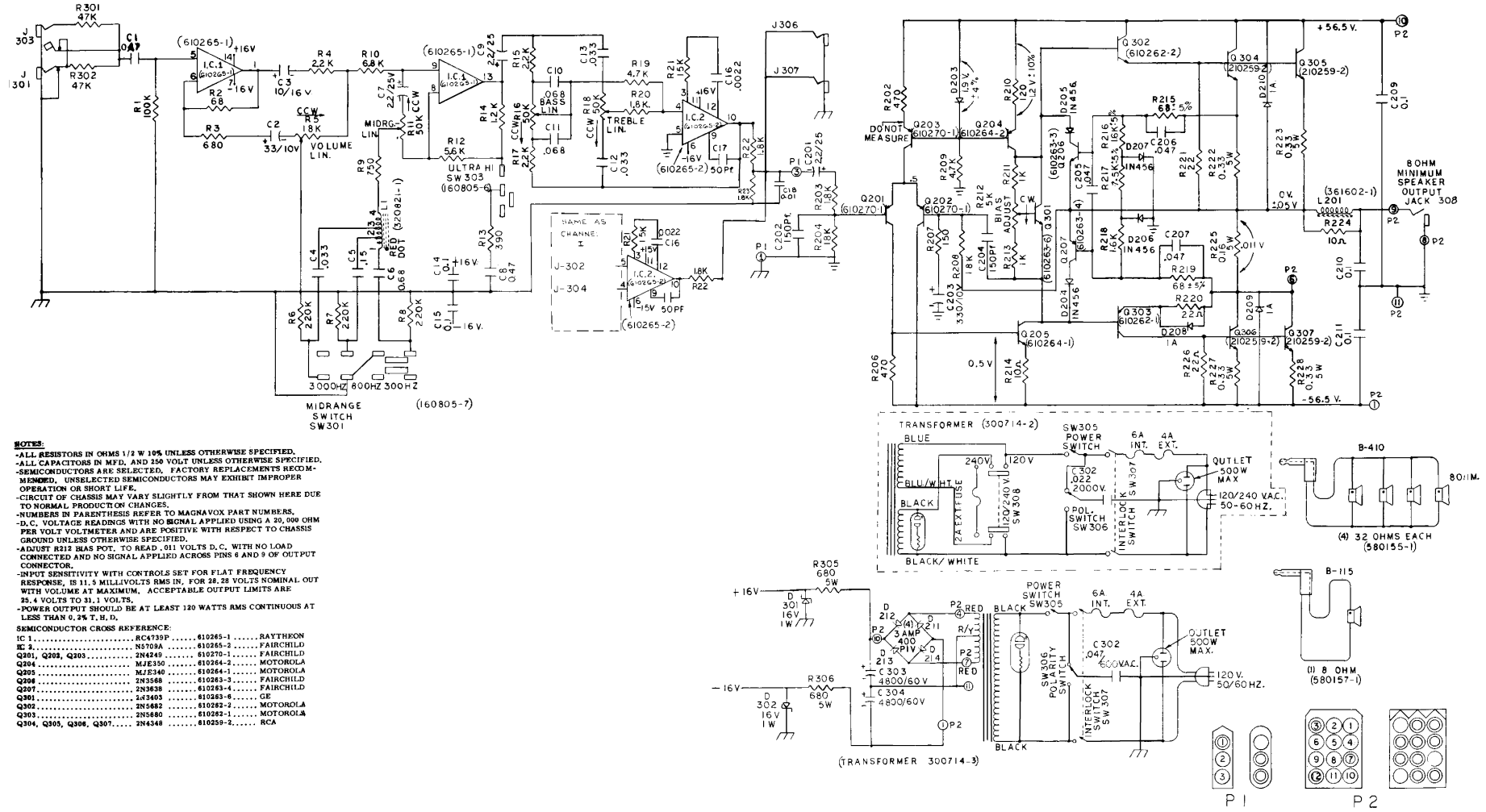

NOTES:

- ALL RESISTORS IN OHMS 1/2 W 10% UNLESS OTHERWISE SPECIFIED.
- ALL CAPACITORS IN MFD. AND 250 VOLT UNLESS OTHERWISE SPECIFIED.
- SEMICONDUCTORS ARE SELECTED. FACTORY REPLACEMENTS RECOMMENDED. UNSELECTED SEMICONDUCTORS MAY EXHIBIT IMPROPER OPERATION OR SHORT LIFE.
- CIRCUIT OF CHASSIS MAY VARY SLIGHTLY FROM THAT SHOWN HERE DUE TO NORMAL PRODUCTION CHANGES.
- NUMBERS IN PARENTHESIS REFER TO MAGNAVOX PART NUMBERS.
- D.C. VOLTAGE READINGS WITH NO SIGNAL APPLIED USING A 20,000 OHM PER VOLT VOLTMETER AND ARE POSITIVE WITH RESPECT TO CHASSIS GROUND UNLESS OTHERWISE SPECIFIED.
- ADJUST R212 BIAS POT. TO READ .011 VOLTS D.C. WITH NO LOAD CONNECTED AND NO SIGNAL APPLIED ACROSS PINS 6 AND 9 OF OUTPUT CONNECTOR.
- INPUT SENSITIVITY WITH CONTROLS SET FOR FLAT FREQUENCY RESPONSE, IS 11.5 MILLIVOLTS RMS IN, FOR 28.28 VOLTS NOMINAL OUT WITH VOLUME AT MAXIMUM. ACCEPTABLE OUTPUT LIMITS ARE 25.4 VOLTS TO 31.1 VOLTS.
- POWER OUTPUT SHOULD BE AT LEAST 120 WATTS RMS CONTINUOUS AT LESS THAN 0.2% T.H.D.

SEMICONDUCTOR CROSS REFERENCE:

IC 1	RC4739P	610265-1	RAYTHEON
IC 2	N5709A	610265-2	FAIRCHILD
Q201, Q202, Q203	2N4249	610270-1	FAIRCHILD
Q204	MJE350	610264-2	MOTOROLA
Q205	MJE340	610264-1	MOTOROLA
Q206	2N3568	610263-3	FAIRCHILD
Q207	2N3638	610263-4	FAIRCHILD
Q301	2N3403	610263-6	GE
Q302	2N5682	610262-2	MOTOROLA
Q303	2N5680	610262-1	MOTOROLA
Q304, Q305, Q306, Q307	2N4348	610259-2	RCA

REVISIONS	A RELEASED 5-21-73	ADDITIONAL MAGNAVOX SPECIFICATIONS	MATERIAL / FINISH

— TOLERANCES — UNLESS OTHERWISE SPECIFIED

DECIMALS	± TOL	FRACTIONS	± TOL
.X	.030	UP TO 6	1/64
.XX	.020	6 TO 24	1/32
.XXX	.010	ABOVE 24	1/16

THREADS - CLASS 2 FIT AFTER PLATING — CONCENTRICITY .010 T.I.R.
MACHINE FINISHES 64 MICRO INCH MAX. — ANGULAR TOL. ± 1/2°
DIMENSIONS IN INCHES UNLESS OTHERWISE SPECIFIED ON DRAWING.
DO NOT SCALE DRAWING

THE AMPEG COMPANY
DIVISION OF THE MAGNAVOX COMPANY
P.O. BOX 315 LINDEN, N.J. 07036

MODELS
B115 & B410

SIGNATURE	DATE	FIRST USED IN ASSEM.
DR. J. DISANO	2/7/73	NEXT ASSEM.
CHK.	5/21/73	USED ON
ENG.	5/21/73	SIZE D — DWG. NO. 591737-1
SCALE		

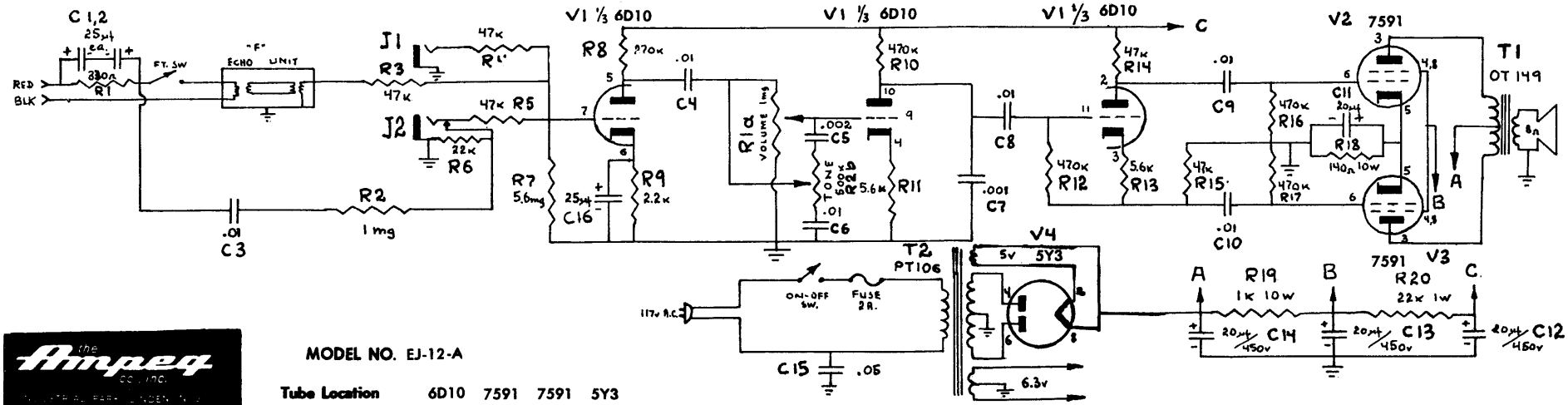

the Ampeg Co. Inc.

MODEL NO. EJ-12-A

Tube Location 6D10 7591 7591 5Y3

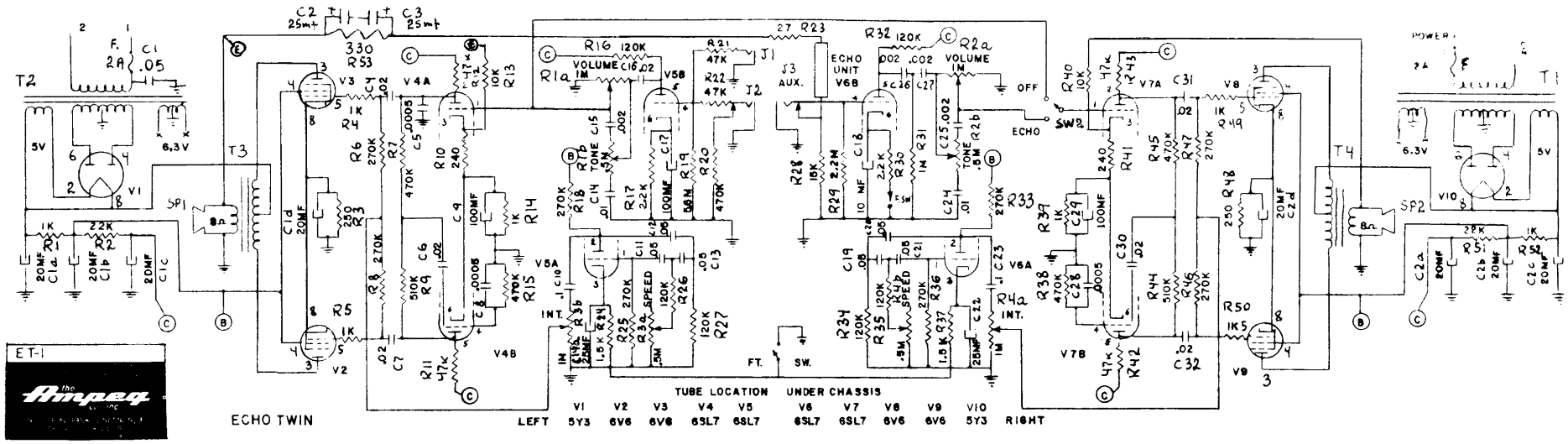
ET-1
the Ampeg
ECHO TWIN
TUBE LOCATION UNDER CHASSIS
LEFT V1 5Y3 V2 6V6 V3 6V6 V4 6SL7 V5 6SL7 V6 6SL7 V7 6SL7 V8 6V6 V9 6V6 V10 5Y3 RIGHT
VOLUME
ECHO UNIT
AUX.
ECHO
OFF
INT.
SPEED
TONE
FT.
SW.
POWER

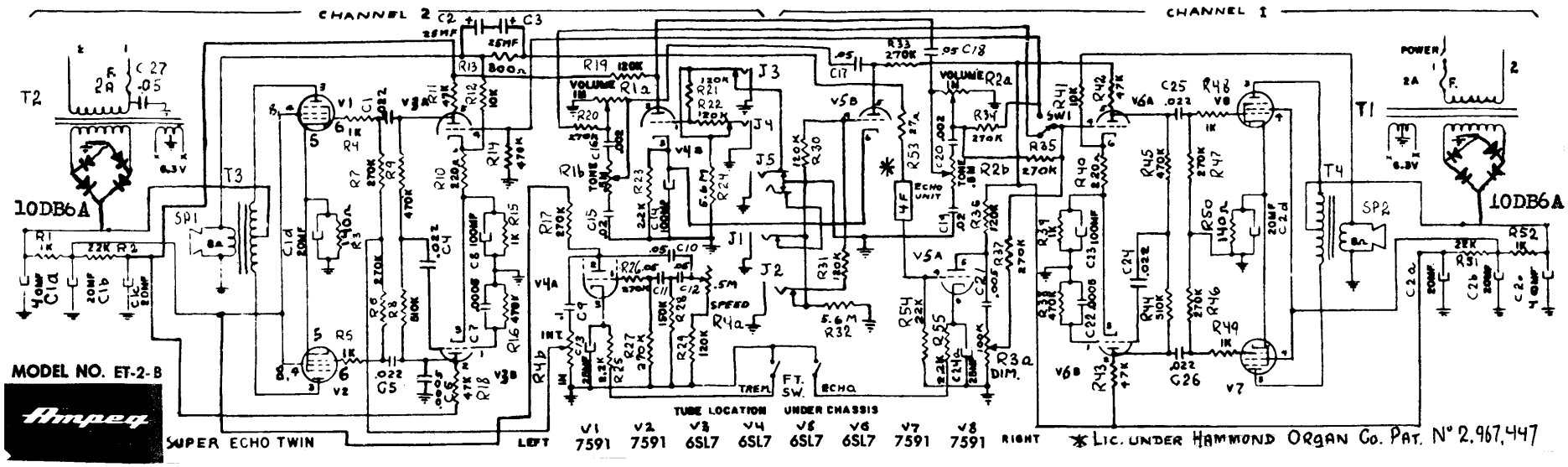
CHANNEL 2
CHANNEL 1
T2
T3
T1
T4
10DB6A
10DB6A
SP1
SP2
POWER
VOLUME
SPEED
TREM
F.T. SW.
ECHO
DIM.
ECHO UNIT
MODEL NO. ET-2-B
Ampeg
SUPER ECHO TWIN
TUBE LOCATION UNDER CHASSIS
LEFT
V1 7591
V2 7591
V3 6SL7
V4 6SL7
V5 6SL7
V6 6SL7
V7 7591
V8 7591
RIGHT
* LIC. UNDER HAMMOND ORGAN CO. PAT. N° 2,967,447

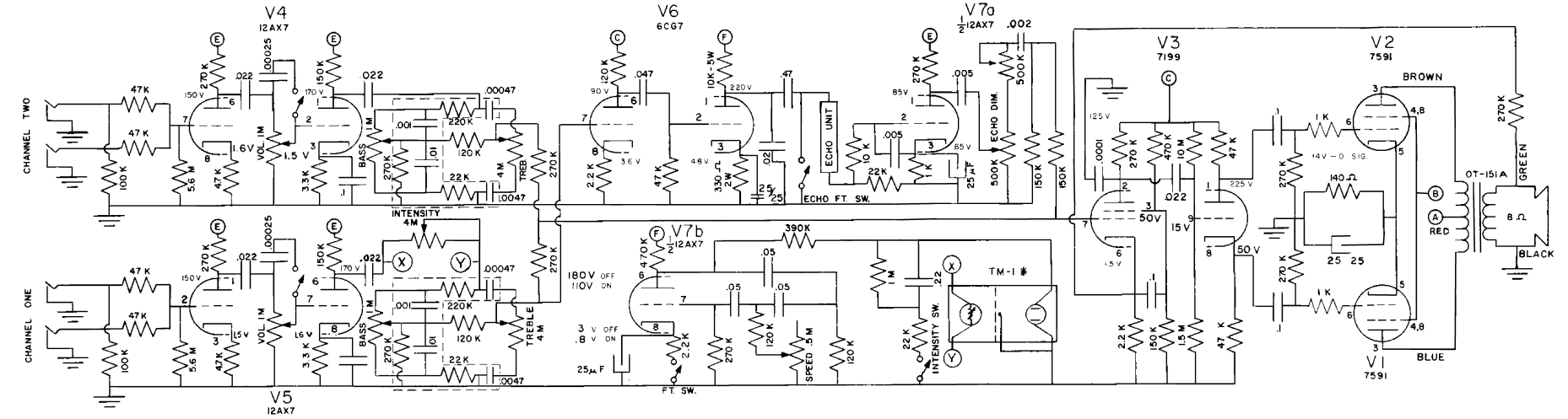

DC VOLTAGE READINGS WITH NO SIGNAL INSERTED

NOTE: Voltage reading with 20,000Ω/volt meter.

(Patent Pending)
* ModuleTM-1 factory replacement only.

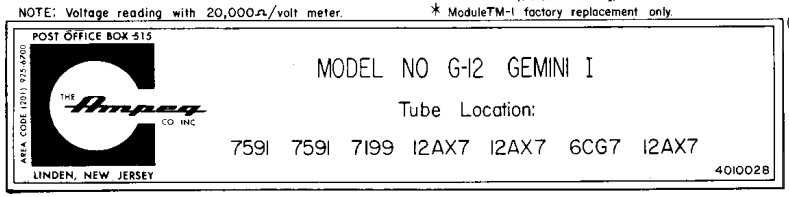

MODEL NO G-12 GEMINI I

Tube Location:

7591 7591 7199 12AX7 12AX7 6CG7 12AX7

4010028

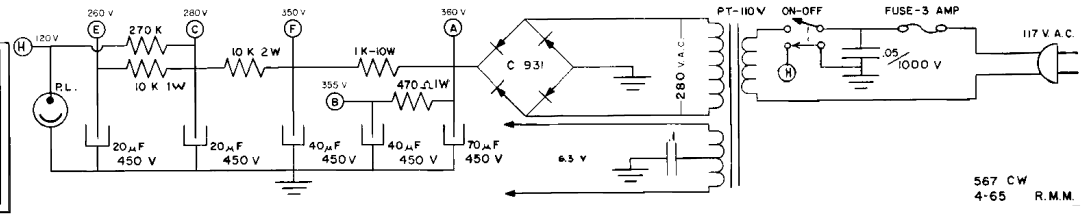

567 CW
4-65 R.M.M.

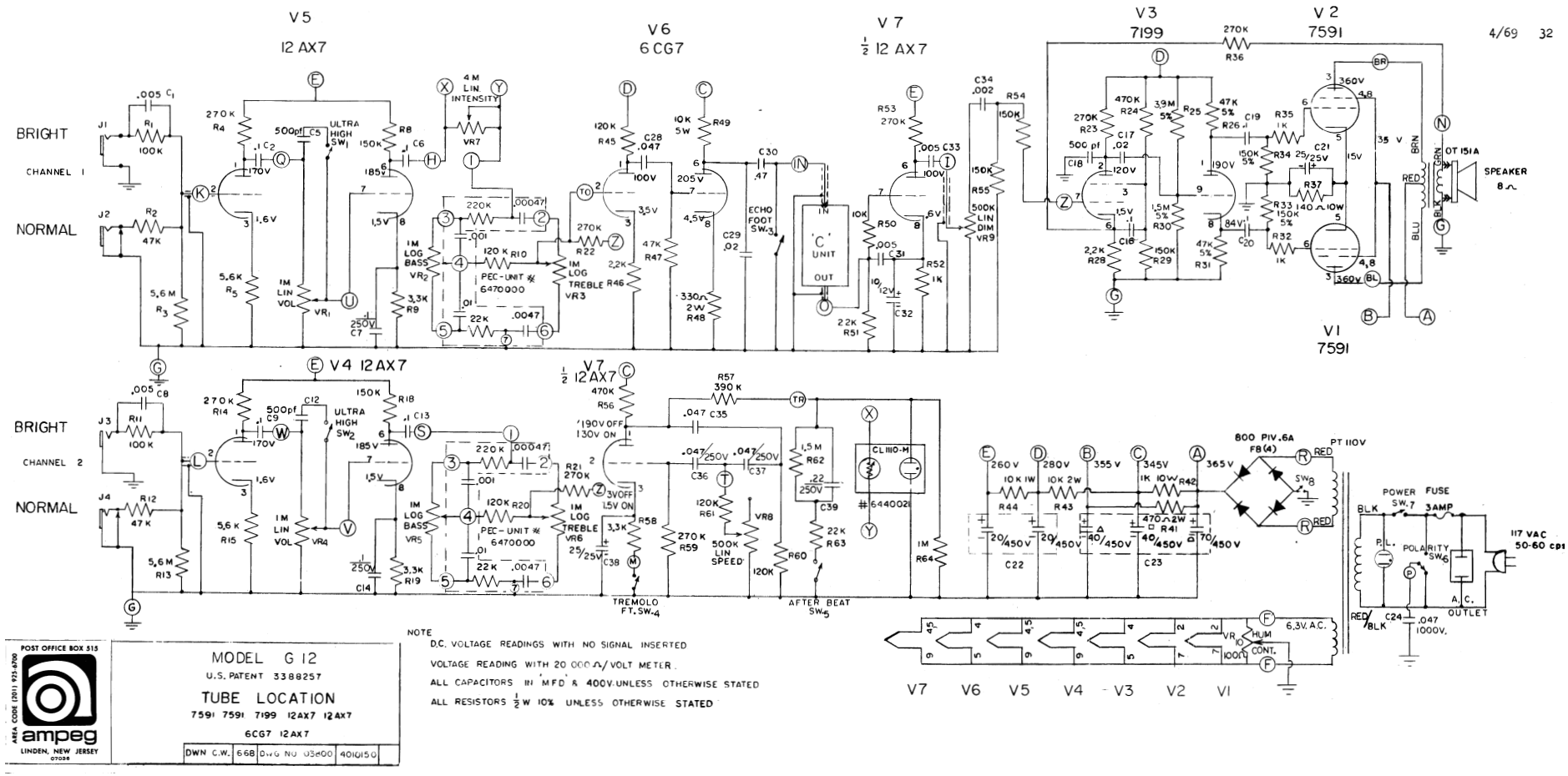
V5
12 AX7
V6
6 CG7
V7
½ 12 AX7
V3
7199
V2
7591
V1
7591
V4 12 AX7
V7
½ 12 AX7
BRIGHT
CHANNEL 1
NORMAL
BRIGHT
CHANNEL 2
NORMAL
4/69 32
SPEAKER 8Ω
OT 151A
PT 110V
POWER SW.7
FUSE 3AMP
117 VAC 50-60 cps
POLARITY SW.6
A.C. OUTLET
TREMOLO FT. SW.4
AFTER BEAT SW.5
ECHO FOOT SW.3
6.3V. A.C.
V7 V6 V5 V4 V3 V2 V1
POST OFFICE BOX 515
AREA CODE (201) 925-6700
ampeg
LINDEN, NEW JERSEY 07036
MODEL G 12
U.S. PATENT 3388257
TUBE LOCATION
7591 7591 7199 12AX7 12AX7
6CG7 12AX7
DWN C.W. 6-68 DWG NO 03600 4010150
NOTE
D.C. VOLTAGE READINGS WITH NO SIGNAL INSERTED
VOLTAGE READING WITH 20 000 Ω/VOLT METER.
ALL CAPACITORS IN MFD & 400V. UNLESS OTHERWISE STATED
ALL RESISTORS ½ W 10% UNLESS OTHERWISE STATED

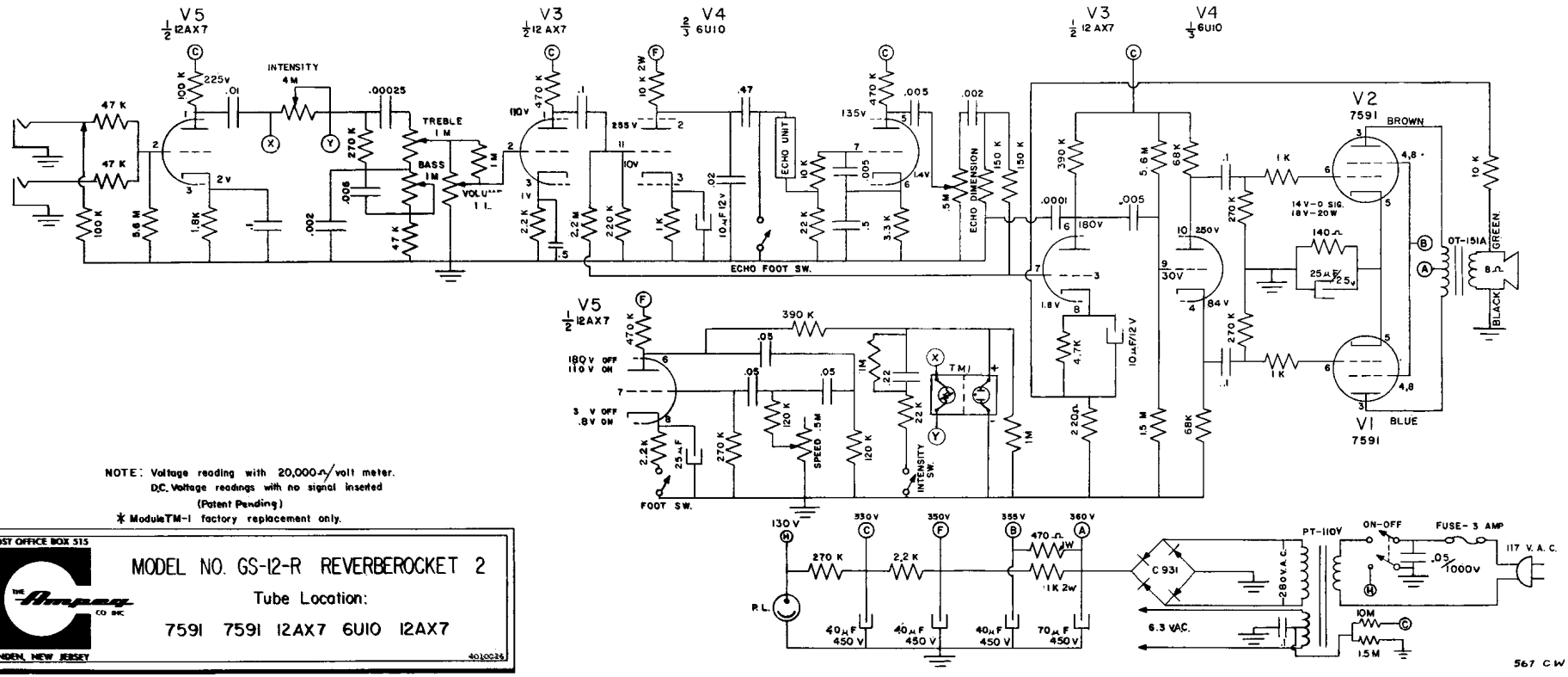

NOTE: Voltage reading with 20,000 Ω/volt meter.
D.C. Voltage readings with no signal inserted
(Patent Pending)
* Module TM-1 factory replacement only.

POST OFFICE BOX 515
THE Ampeg CO INC
AREA CODE (201) 925-9700
LINDEN, NEW JERSEY

MODEL NO. GS-12-R REVERBEROCKET 2

Tube Location:

7591 7591 12AX7 6U10 12AX7

40100236

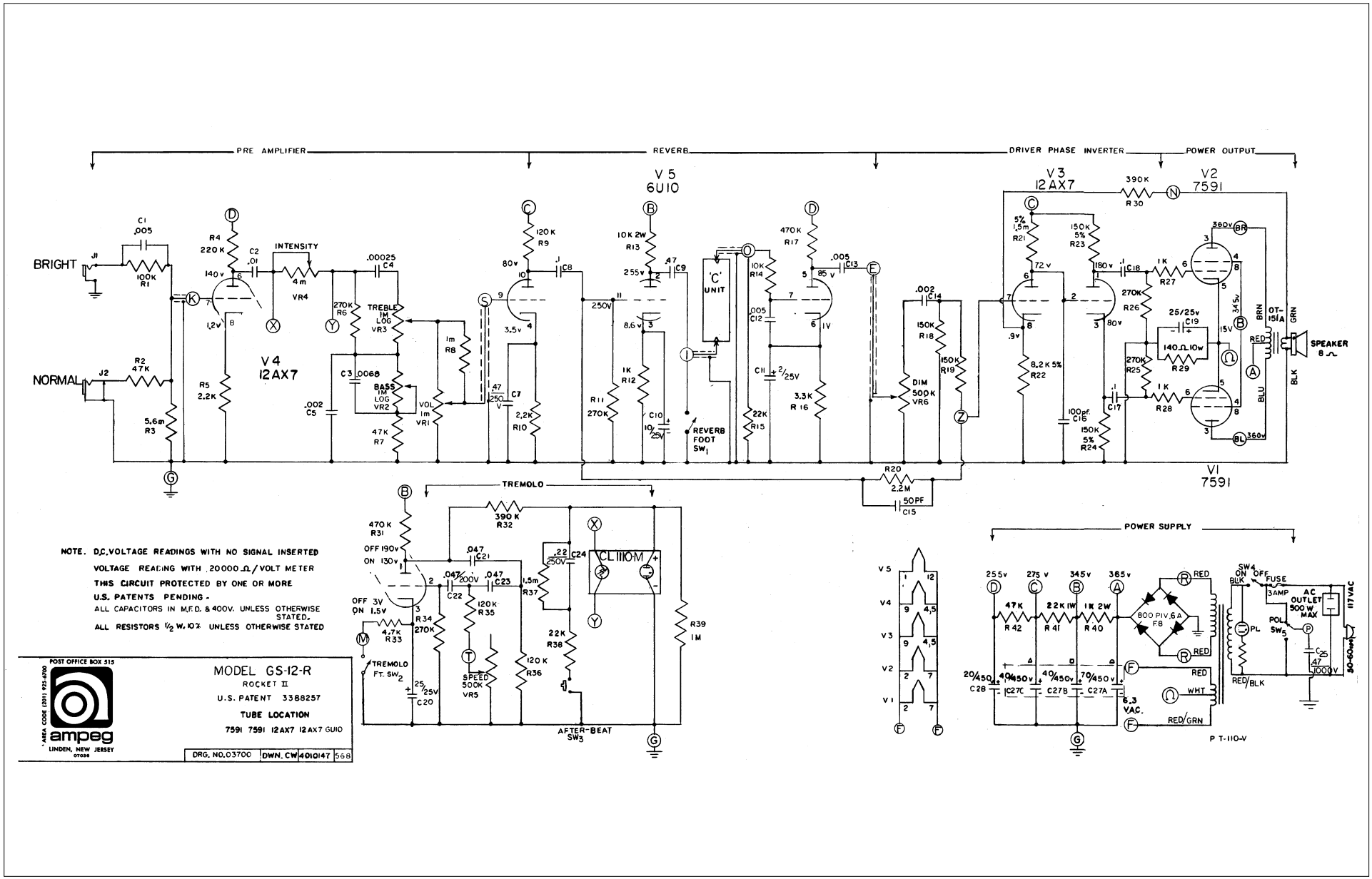
PRE AMPLIFIER
REVERB
DRIVER PHASE INVERTER
POWER OUTPUT
BRIGHT
NORMAL
V4 12AX7
V5 6U10
V3 12AX7
V2 7591
V1 7591
INTENSITY
TREBLE 1M LOG VR3
BASS 1M LOG VR2
VOL 1m VR1
'C' UNIT
REVERB FOOT SW1
DIM 500K VR6
SPEAKER 8 Ω
OT-151A
TREMOLO
TREMOLO FT. SW2
SPEED 500K VR5
AFTER-BEAT SW3
CL 110M
POWER SUPPLY
800 PIV, 6A F8
AC OUTLET 500 W. MAX
117 VAC
50-60 cps
NOTE. D.C. VOLTAGE READINGS WITH NO SIGNAL INSERTED
VOLTAGE READING WITH 20000 Ω/VOLT METER
THIS CIRCUIT PROTECTED BY ONE OR MORE
U.S. PATENTS PENDING -
ALL CAPACITORS IN M.F.D. & 400V. UNLESS OTHERWISE STATED.
ALL RESISTORS 1/2 W. 10% UNLESS OTHERWISE STATED
POST OFFICE BOX 515
AREA CODE (201) 925-4700
ampeg
LINDEN, NEW JERSEY 07036
MODEL GS-12-R
ROCKET II
U.S. PATENT 3388257
TUBE LOCATION
7591 7591 12AX7 12AX7 6U10
DRG. NO. 03700
DWN. CW 4010147 568
P T-110-V

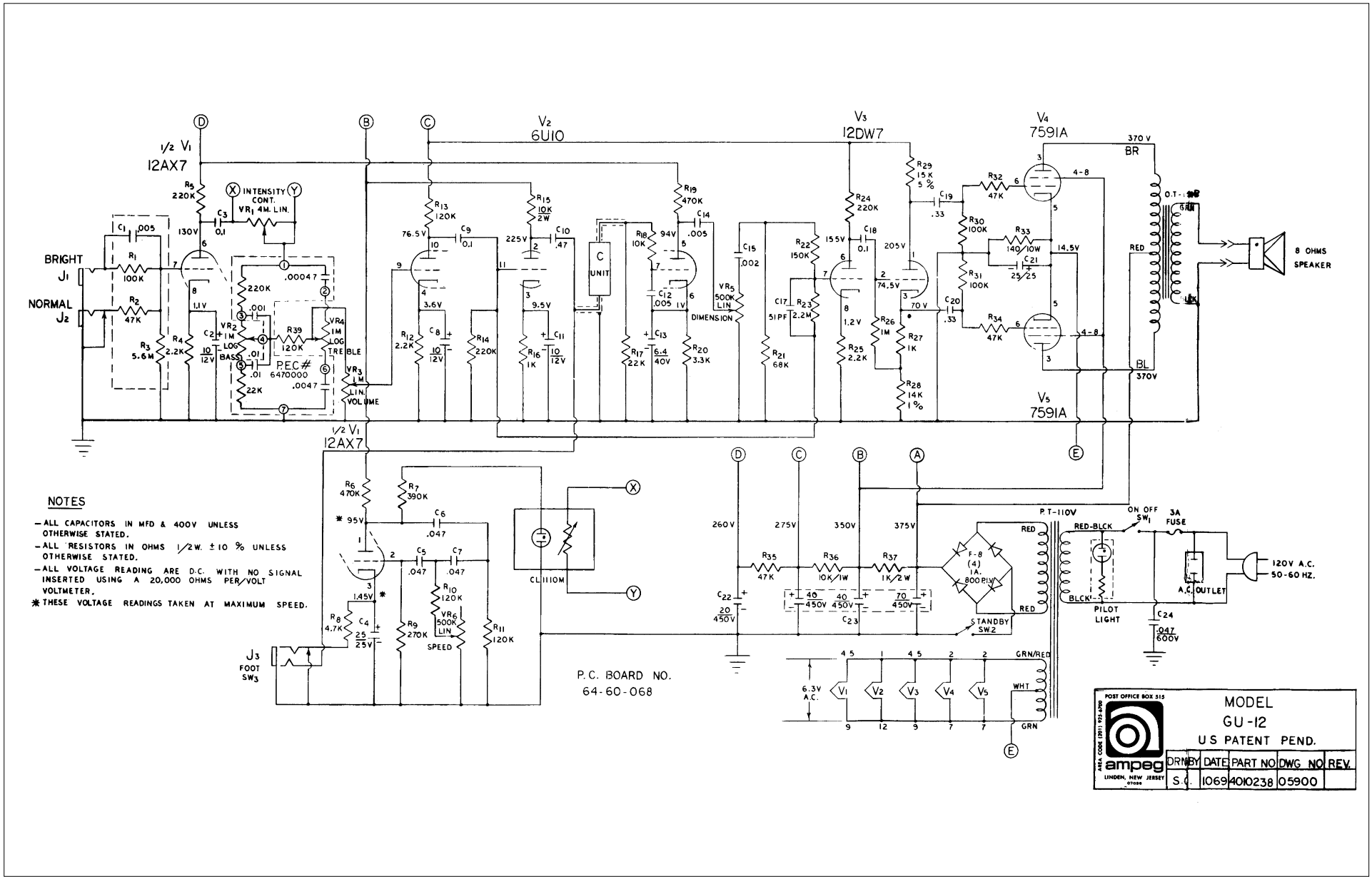
1/2 V1
12AX7
V2
6U10
V3
12DW7
V4
7591A
V5
7591A
1/2 V1
12AX7
BRIGHT
J1
NORMAL
J2
INTENSITY CONT.
VR1 4M. LIN.
PEC# 6470000
BASS
TREBLE
VOLUME
C UNIT
DIMENSION
370 V
BR
RED
BL
370V
8 OHMS SPEAKER
CL1110M
J3
FOOT SW3
P.C. BOARD NO.
64-60-068
P.T-110V
RED-BLCK
ON OFF SW1
3A FUSE
120V A.C. 50-60 HZ.
A.C. OUTLET
PILOT LIGHT
STANDBY SW2
GRN/RED
WHT
GRN
6.3V A.C.
NOTES
- ALL CAPACITORS IN MFD & 400V UNLESS OTHERWISE STATED.
- ALL RESISTORS IN OHMS 1/2W. ±10 % UNLESS OTHERWISE STATED.
- ALL VOLTAGE READING ARE D.C. WITH NO SIGNAL INSERTED USING A 20,000 OHMS PER VOLT VOLTMETER.
* THESE VOLTAGE READINGS TAKEN AT MAXIMUM SPEED.
POST OFFICE BOX 515
AREA CODE (201) 925-8000
ampeg
LINDEN, NEW JERSEY 07036
MODEL
GU-12
U S PATENT PEND.
DRN BY
DATE
PART NO
DWG NO
REV.
S.C.
10694
010238
05900

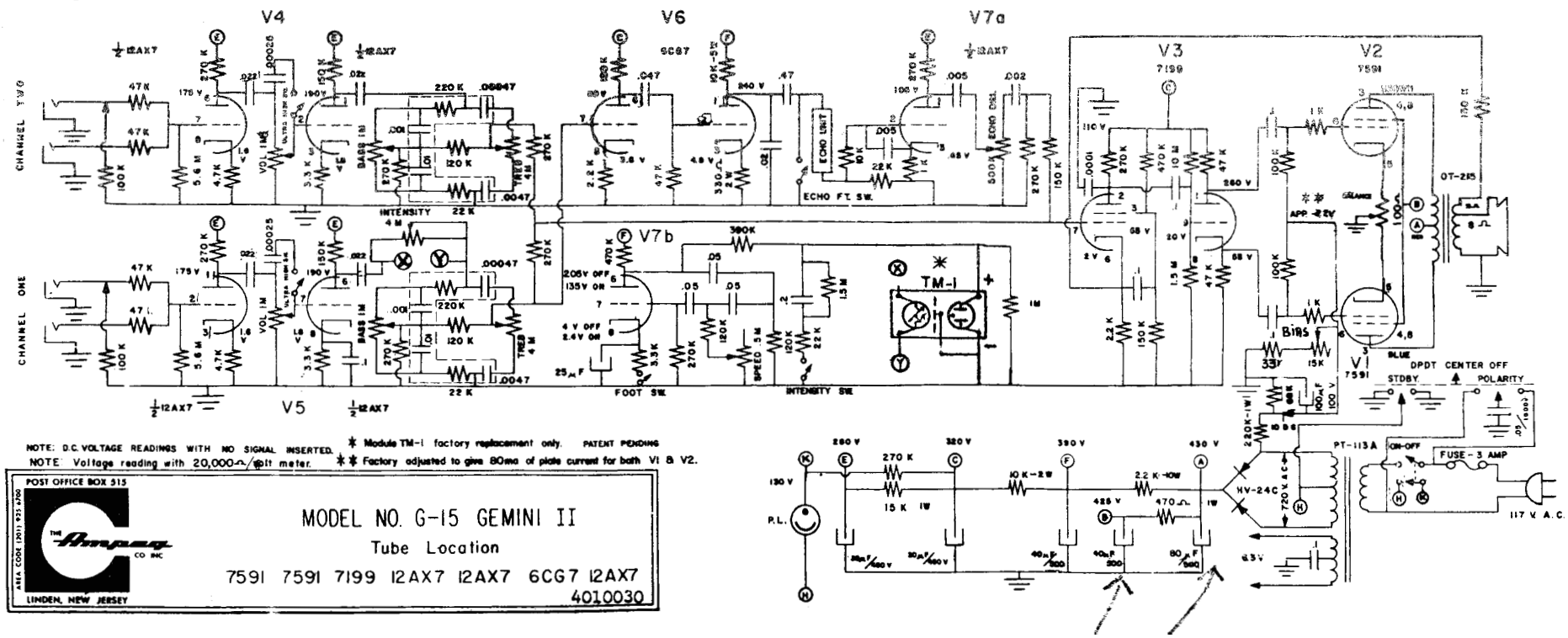
V4
V6
V7a
V3
V2
V7b
V5
V1
CHANNEL TWO
CHANNEL ONE
TM-1
ECHO FT. SW.
FOOT SW.
INTENSITY SW.
INTENSITY
Bias
DPDT CENTER OFF
STDBY
POLARITY
PT-113A
ON-OFF
FUSE - 3 AMP
117 V. A.C.
OT-215
HV-24C
P.L.
NOTE: D.C. VOLTAGE READINGS WITH NO SIGNAL INSERTED.
NOTE Voltage reading with 20,000-Ω/volt meter.
* Module TM-1 factory replacement only. PATENT PENDING
** Factory adjusted to give 80ma of plate current for both V1 & V2.
POST OFFICE BOX 515
LINDEN, NEW JERSEY
MODEL NO. G-15 GEMINI II
Tube Location
7591 7591 7199 12AX7 12AX7 6CG7 12AX7
4010030

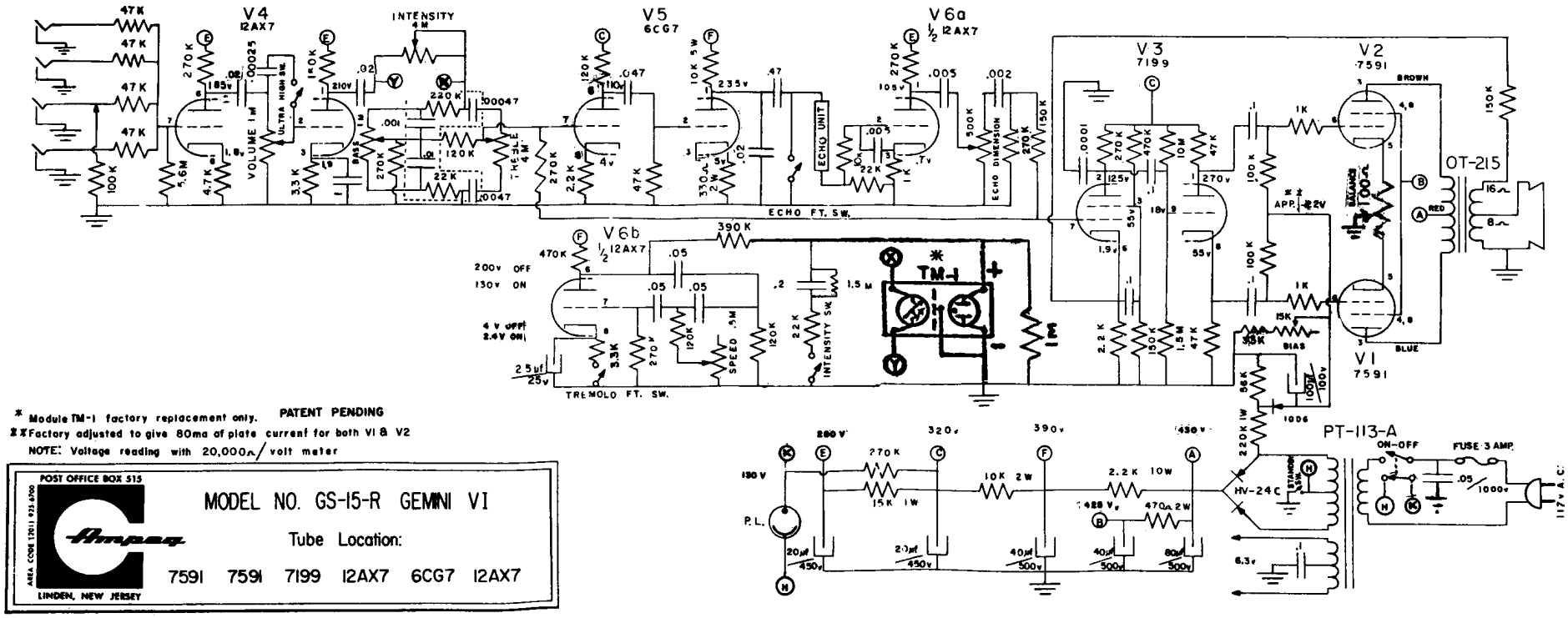

* Module TM-1 factory replacement only. PATENT PENDING

** Factory adjusted to give 80ma of plate current for both V1 & V2

NOTE: Voltage reading with 20,000Ω/volt meter

POST OFFICE BOX 515

AREA CODE (201) 925-6700

LINDEN, NEW JERSEY

MODEL NO. GS-15-R GEMINI VI

Tube Location:

7591 7591 7199 12AX7 6CG7 12AX7

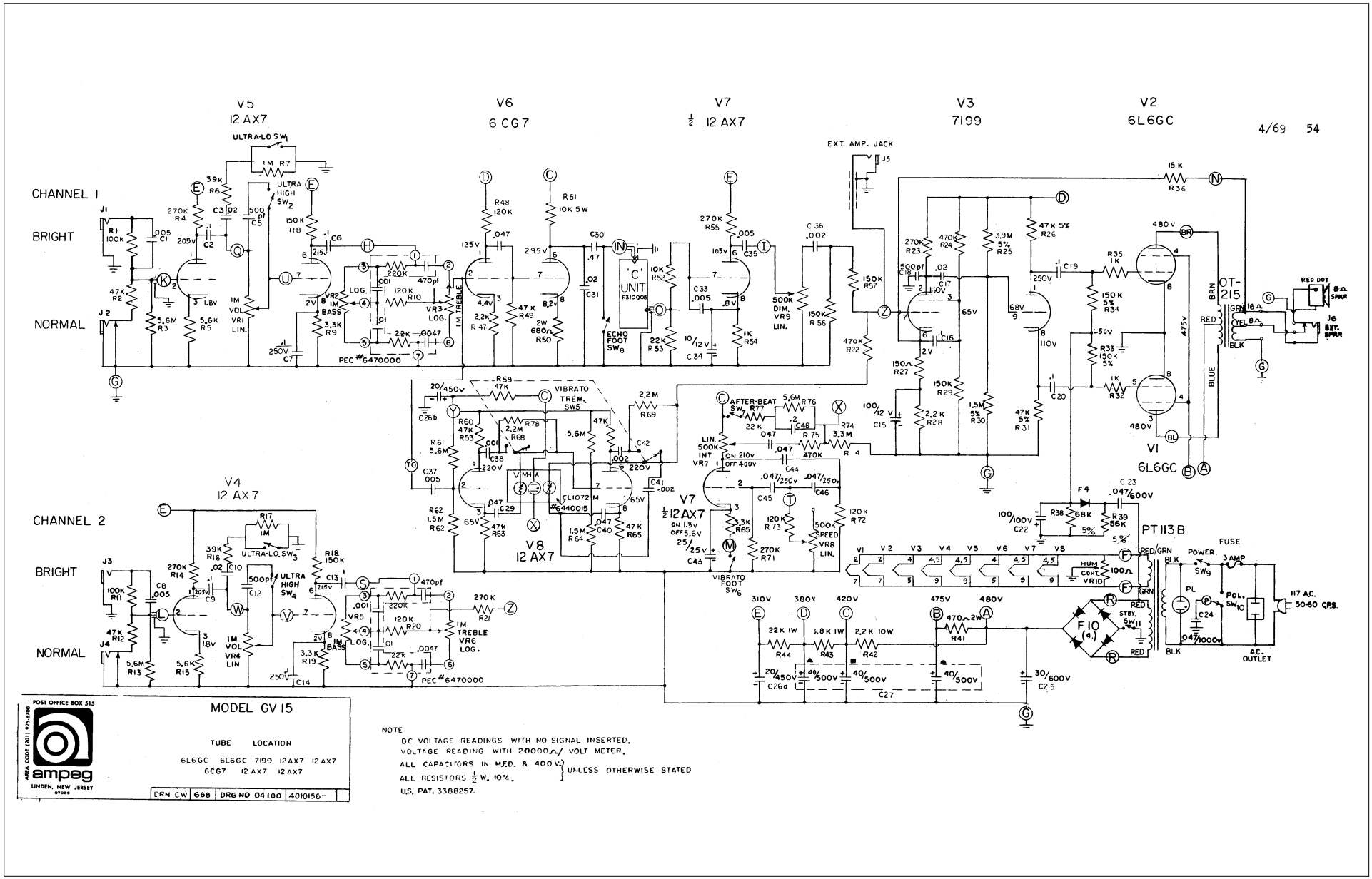
V5
12 AX7
V6
6 CG7
V7
½ 12 AX7
V3
7199
V2
6L6GC
4/69 54
CHANNEL 1
BRIGHT
NORMAL
CHANNEL 2
V4
12 AX7
V8
12 AX7
V7
½ 12 AX7
V1
6L6GC
PT113B
OT-215
F10
ULTRA-LO SW1
ULTRA HIGH SW2
EXT. AMP. JACK
'C' UNIT
ECHO FOOT SW6
VIBRATO TREM. SW5
AFTER-BEAT SW4
VIBRATO FOOT SW6
ULTRA-LO SW3
ULTRA HIGH SW4
PEC #6470000
POWER SW9
FUSE 3 AMP
POL. SW10
117 AC. 50-60 CPS.
AC. OUTLET
RED DOT
J6 EXT. SPKR
POST OFFICE BOX 515
AREA CODE (201) 925-4700
ampeg
LINDEN, NEW JERSEY
07036
MODEL GV 15
TUBE LOCATION
6L6GC 6L6GC 7199 12AX7 12AX7
6CG7 12AX7 12AX7
DRN CW 668 DRG NO 04100 4010156
NOTE
DC VOLTAGE READINGS WITH NO SIGNAL INSERTED.
VOLTAGE READING WITH 20000Ω/VOLT METER.
ALL CAPACITORS IN MFD. & 400V.
ALL RESISTORS ½ W. 10%.
UNLESS OTHERWISE STATED
U.S. PAT. 3388257.

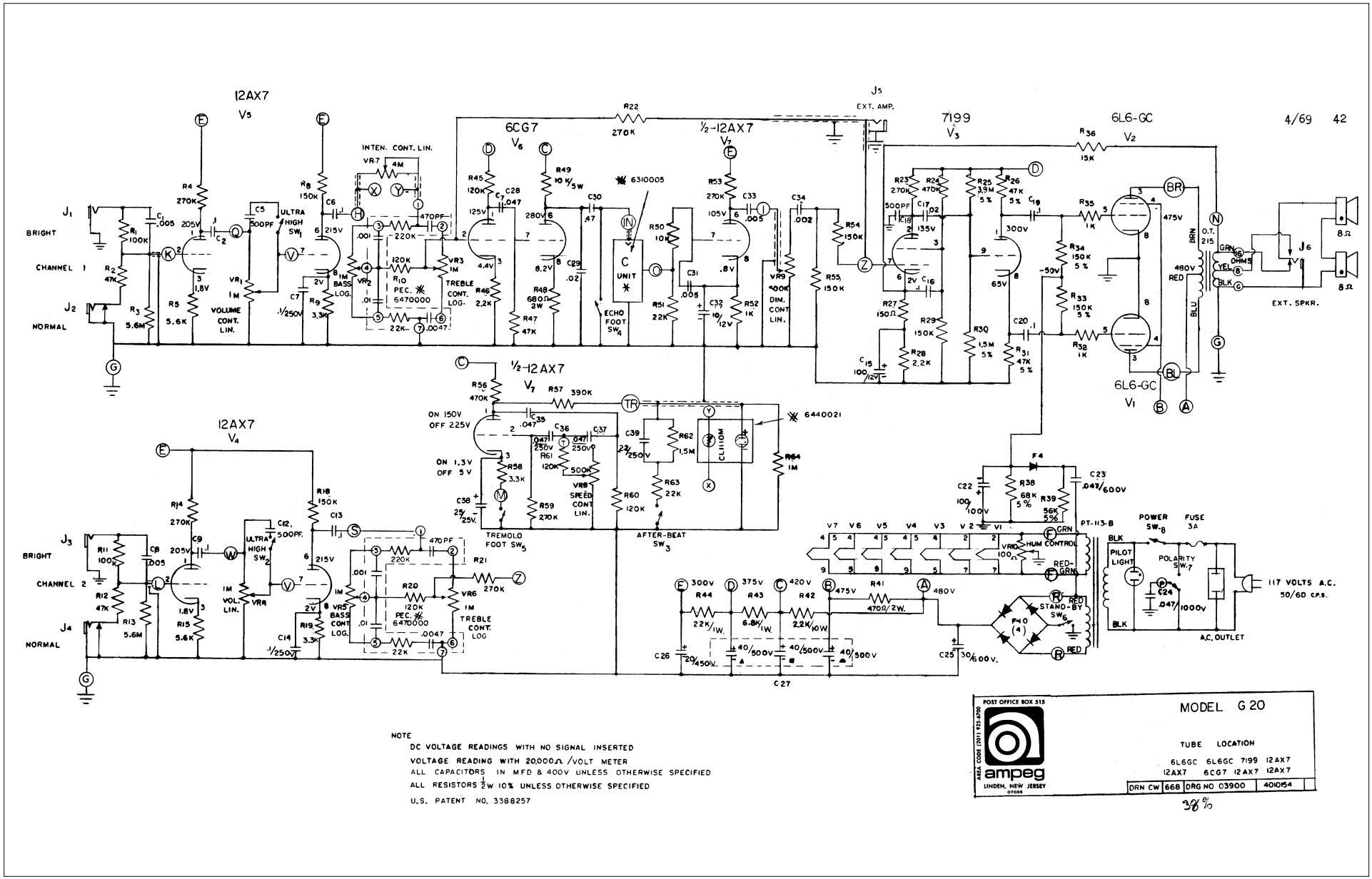

NOTE

DC VOLTAGE READINGS WITH NO SIGNAL INSERTED

VOLTAGE READING WITH 20,000Ω /VOLT METER

ALL CAPACITORS IN MFD & 400V UNLESS OTHERWISE SPECIFIED

ALL RESISTORS ½W 10% UNLESS OTHERWISE SPECIFIED

U.S. PATENT NO. 3388257

POST OFFICE BOX 513
AREA CODE (201) 925-8700
ampeg
LINDEN, NEW JERSEY 07036

MODEL G 20

TUBE LOCATION			
6L6GC	6L6GC	7199	12AX7
12AX7	6CG7	12AX7	12AX7

DRN CW	668	DRG NO 03900	4010154

38%

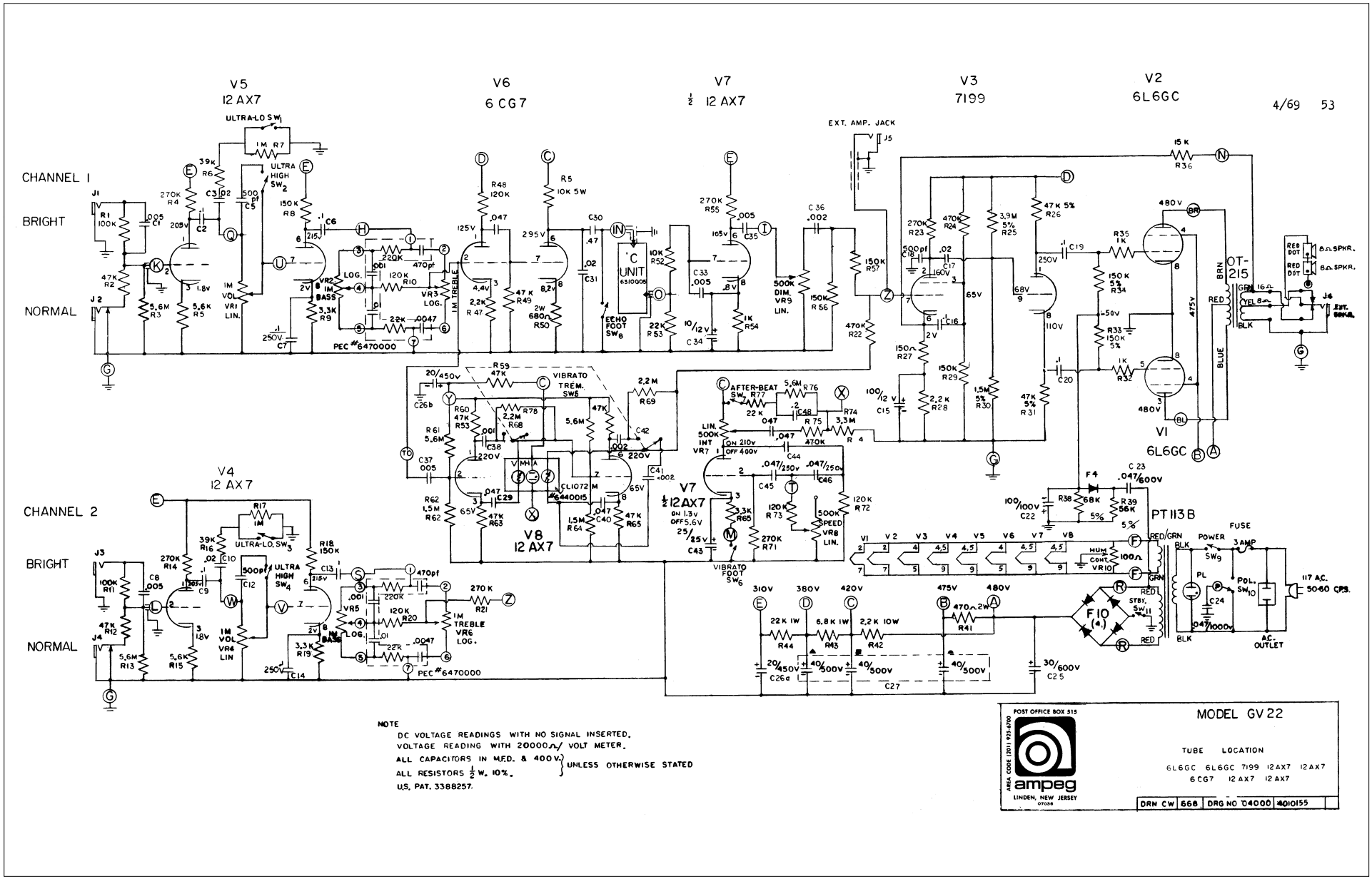
V5
12 AX7
V6
6 CG7
V7
½ 12 AX7
V3
7199
V2
6L6GC
4/69 53
CHANNEL 1
BRIGHT
NORMAL
CHANNEL 2
BRIGHT
NORMAL
ULTRA-LO SW1
ULTRA HIGH SW2
EXT. AMP. JACK
J5
'C' UNIT
ECHO FOOT SW8
VIBRATO TREM. SW5
AFTER-BEAT SW7
VIBRATO FOOT SW6
V8
12 AX7
V7
½ 12AX7
V1
6L6GC
OT-215
PT113B
F10 (4)
POWER SW9
FUSE 3 AMP
POL. SW10
STBY. SW11
117 AC. 50-60 CPS.
AC. OUTLET
PEC #6470000
V4
12 AX7
ULTRA-LO. SW3
ULTRA HIGH SW4
PEC #6470000
NOTE
DC VOLTAGE READINGS WITH NO SIGNAL INSERTED.
VOLTAGE READING WITH 20000Ω/ VOLT METER.
ALL CAPACITORS IN MFD. & 400 V.
ALL RESISTORS ½ W. 10%.
UNLESS OTHERWISE STATED
U.S. PAT. 3388257.
POST OFFICE BOX 515
AREA CODE (201) 925-8700
ampeg
LINDEN, NEW JERSEY
07036
MODEL GV 22
TUBE LOCATION
6L6GC 6L6GC 7199 12AX7 12AX7
6CG7 12AX7 12AX7
DRN CW 568 DRG NO 04000 4010155

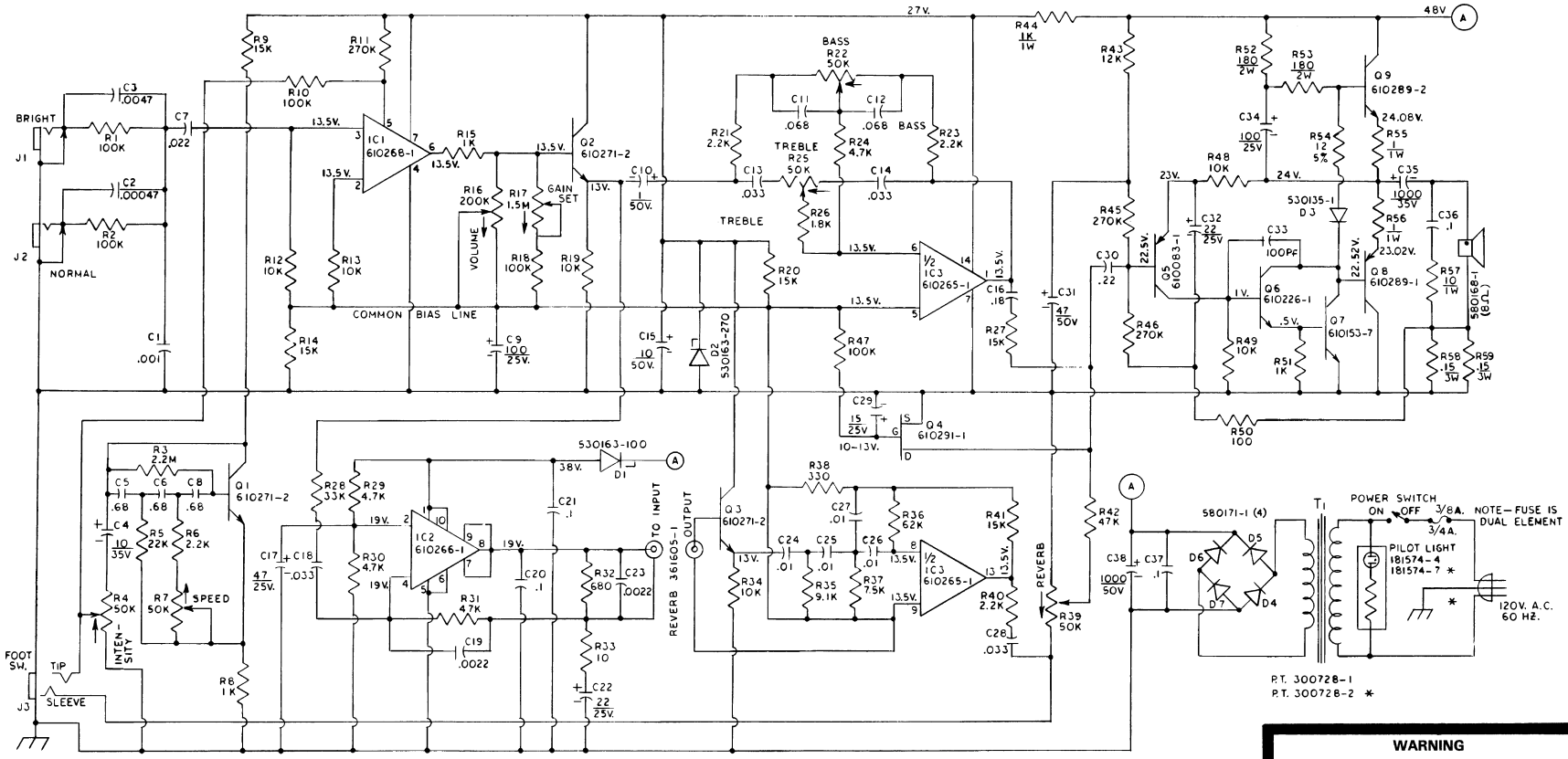

WARNING

For maximum safety, reliability and performance, all parts must be replaced by those having identical specifications. Under no circumstances may the original design be modified or altered without permission from the Ampeg Company.

NOTES — UNLESS OTHERWISE SPECIFIED

1. Capacitance values are in microfarads, 10%, 100V.
2. Resistance values are in Ohms, 10%, ½W.
3. D.C. voltage readings taken with no signal applied and are positive with respect to chassis ground.
4. **Alignment:**
   With volume max, bass and treble at mid position, and reverb and tremolo min., apply a 0.01 VAC 1 kHz. signal to the normal input jack. Adjust R17 for 10 VAC at output terminals with an 8 Ohm. nonreactive load.
5. **Hum and Noise:**
   Volume max., tone controls mid, others min. Eo = 25 mV max.
   Volume min., tone controls mid, others min. Eo = 5 mV max.
6. Arrow indicates clockwise rotation of potentiometer. (Trimmer viewed from knob side).
*7. Parts indicated with asterisk are used on 240V export versions only.
8. Actual circuit may vary slightly due to normal production changes.

MECHANICAL DISASSEMBLY

1. Remove baffle by placing fingers under lower right corner of logo and pulling straight out.
2. Remove the four chassis mounting screws shown in the diagram. (Chassis can be slid half way out the front of the cabinet to check the fuse).
3. Disconnect speaker by reaching through vent hole and pulling the lead clips off the speaker terminals.
4. Slide chassis out the front of the cabinet.

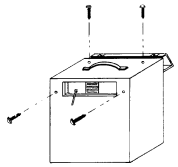

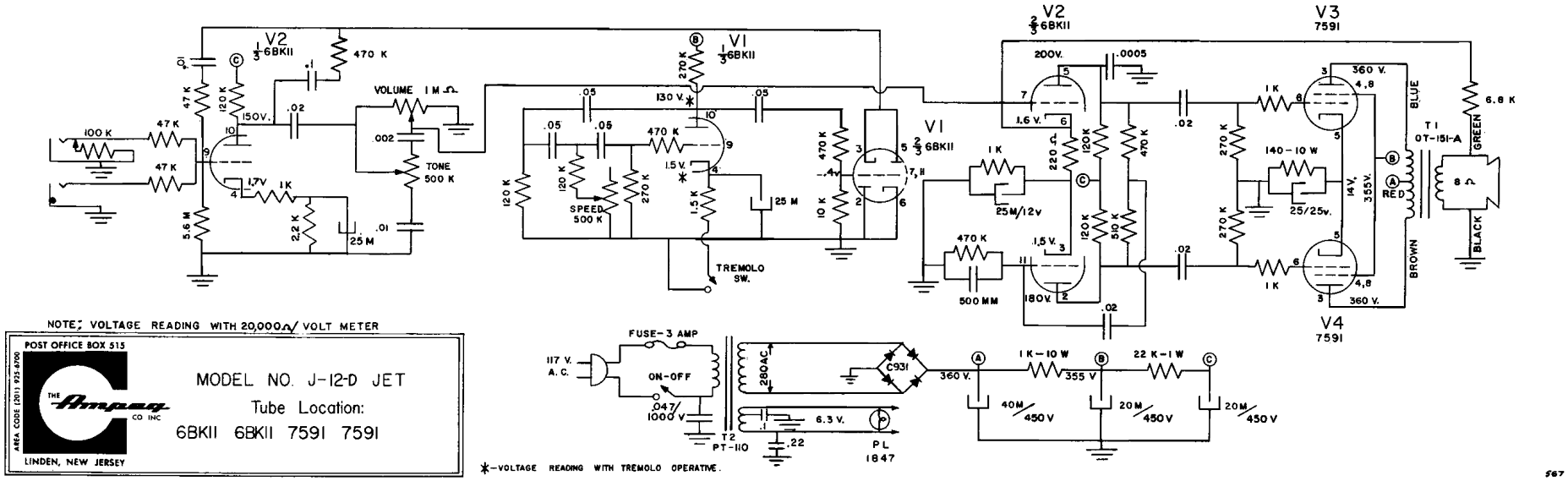
V2
1/3 6BK11
470 K
.01
47 K
120 K
150V.
.02
.1
VOLUME 1 MΩ
100 K
47 K
47 K
1.7V
1 K
5.6 M
2.2 K
.01
25 M
.002
TONE
500 K
V1
1/3 6BK11
270 K
130 V.
.05
.05
.05
470 K
1.5 V.
120 K
120 K
SPEED
500 K
270 K
1.5 K
25 M
470 K
10 K
TREMOLO
SW.
V1
2/3 6BK11
1 K
25M/12v
470 K
500 MM
1.5 V.
180V.
V2
2/3 6BK11
200V.
.0005
1.6 V.
220 K
120 K
470 K
120 K
510 K
.02
.02
.02
V3
7591
1 K
360 V.
4,8
270 K
140-10 W
25/25v.
14V.
355V.
270 K
1 K
4,8
360 V.
V4
7591
BLUE
RED
BROWN
T1
OT-151-A
8 Ω
6.8 K
GREEN
BLACK
NOTE; VOLTAGE READING WITH 20,000Ω/VOLT METER
POST OFFICE BOX 515
THE Ampeg CO INC
AREA CODE (201) 925-8700
LINDEN, NEW JERSEY
MODEL NO. J-12-D JET
Tube Location:
6BK11 6BK11 7591 7591
FUSE-3 AMP
117 V.
A.C.
ON-OFF
.047/
1000 V
T2
PT-110
280AC.
C931
360 V.
6.3 V.
.1
.22
PL
1847
1 K-10 W
355 V
22 K-1 W
40M/
450 V
20M/
450 V
20M/
450 V
*-VOLTAGE READING WITH TREMOLO OPERATIVE.
567

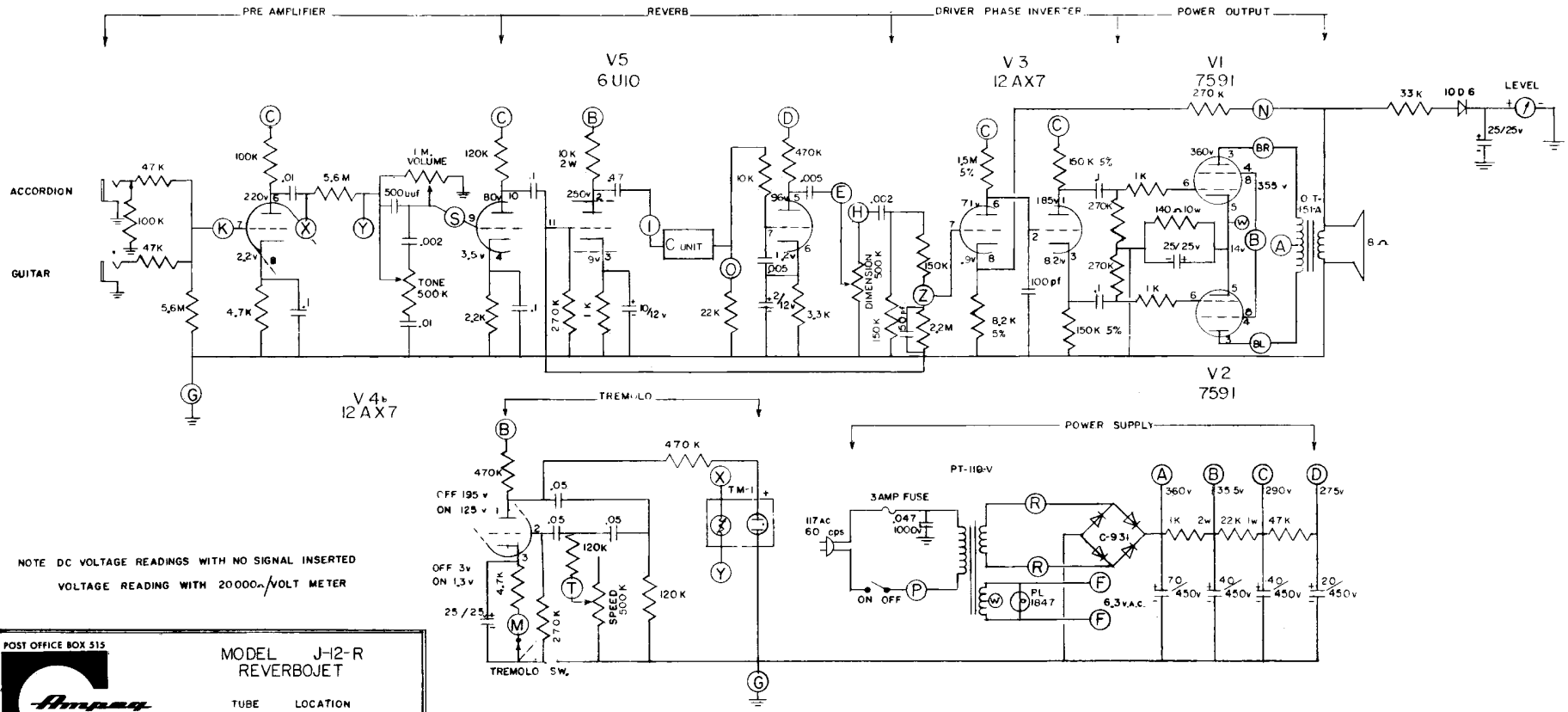
PRE AMPLIFIER
REVERB
DRIVER PHASE INVERTER
POWER OUTPUT
V5
6U10
V3
12AX7
V1
7591
V4
12AX7
V2
7591
ACCORDION
GUITAR
1 M. VOLUME
TONE 500 K
C UNIT
DIMENSION 500 K
LEVEL
TREMOLO
POWER SUPPLY
PT-110-V
3 AMP FUSE
117 ac 60 cps
ON OFF
C-931
PL 1847
6.3 v.a.c.
TM-1
SPEED 500 K
TREMOLO SW.
OFF 195 v
ON 125 v
OFF 3v
ON 1.3v
25/25
8 Ω
O T-151-A
360v
355 v
355 v
290v
275v
NOTE DC VOLTAGE READINGS WITH NO SIGNAL INSERTED
VOLTAGE READING WITH 20000Ω/VOLT METER
POST OFFICE BOX 515
AREA CODE (201) 925-4700
Ampeg
LINDEN, NEW JERSEY
MODEL J-12-R
REVERBOJET
TUBE LOCATION
7591 7591 12AX7 12AX7 6U10
DWN. CW. #401010I
467 P-C

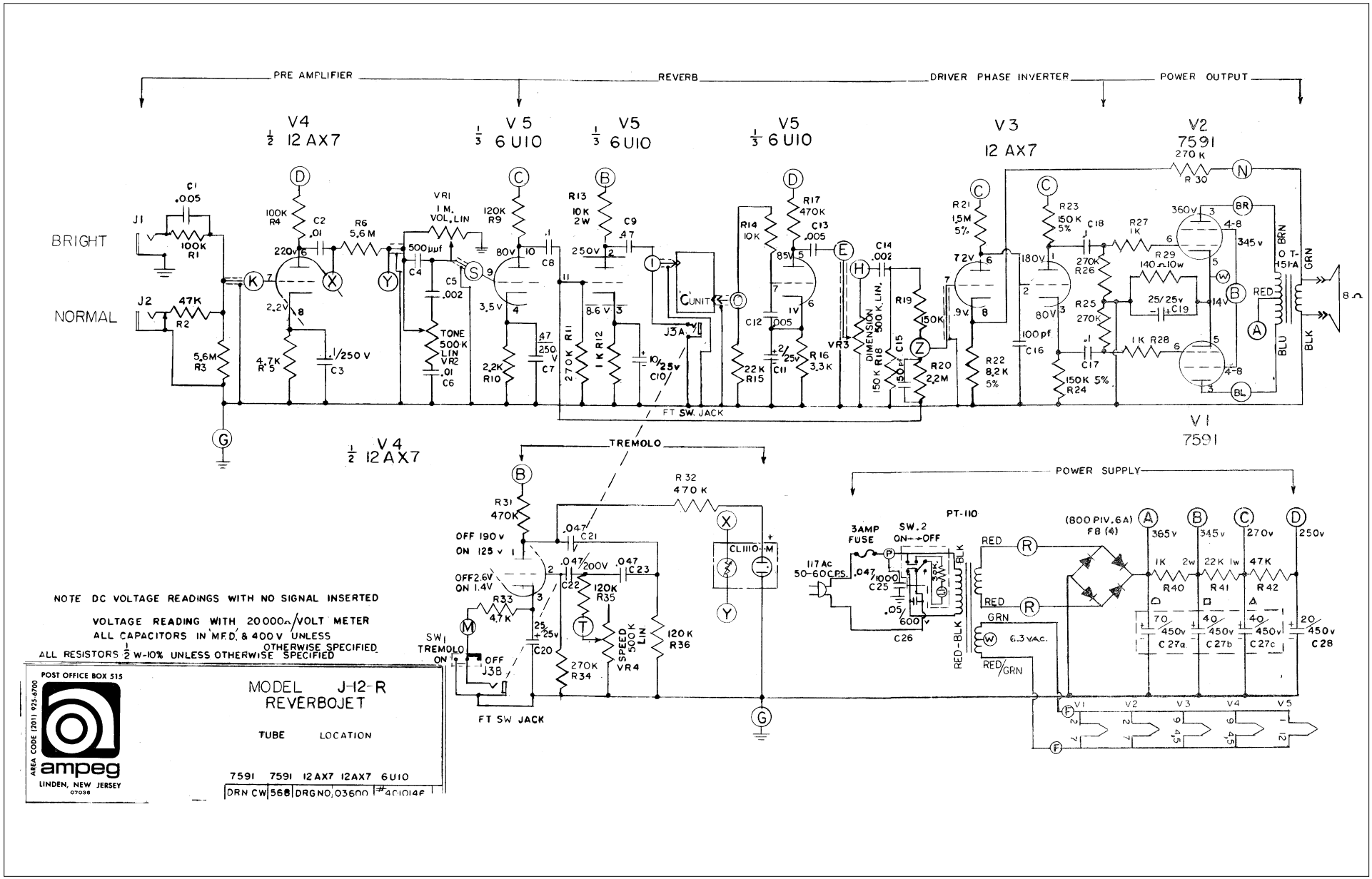
PRE AMPLIFIER
REVERB
DRIVER PHASE INVERTER
POWER OUTPUT
V4 ½ 12AX7
V5 ⅓ 6U10
V5 ⅓ 6U10
V5 ⅓ 6U10
V3 12AX7
V2 7591
V1 7591
V4 ½ 12AX7
BRIGHT
NORMAL
J1
J2
C1 .005
100K R1
47K R2
5.6M R3
100K R4
C2 .01
R6 5.6M
VR1 1M. VOL. LIN
500μμf C4
C5 .002
TONE 500K LIN VR2
.01 C6
4.7K R5
1/250 V C3
120K R9
C8
2.2K R10
47 250 V C7
R13 10K 2W
C9 .47
270K R11
1K R12
10/25v C10
J3A
FT SW. JACK
R14 10K
R17 470K
C13 .005
C12 .005
C11 2/25v
R16 3.3K
22K R15
C14 .002
DIMENSION 500K LIN. R18
150K R19
C15 50pf
R20 2.2M
VR3
R21 1.5M 5%
R22 8.2K 5%
R23 150K 5%
C18 .1
R27 1K
R26 270K
R25 270K
C17 .1
R24 150K 5%
100pf C16
R28 1K
R29 140Ω 10w
25/25v C19
R30 270K
T-151-A
BRN
GRN
RED
BLU
BLK
8Ω
TREMOLO
R31 470K
OFF 190v ON 125v
C21 .047
C22 .047 200V
C23 .047
OFF 2.6V ON 1.4V
R33 4.7K
C20 25/25v
120K R35
SPEED 500K LIN VR4
270K R34
120K R36
SW. TREMOLO ON OFF
J3B
FT SW JACK
R32 470K
CL1110-M
POWER SUPPLY
PT-110
3AMP FUSE
SW.2 ON OFF
117 AC 50-60 CPS.
.047
C25 1000
.05/600v
C26
RED-BLK
RED
GRN
6.3 vac.
RED/GRN
(800 PIV. 6A) F8 (4)
365v
345v
270v
250v
R40 1K 2w
R41 22K 1w
R42 47K
C27a 70/450v
C27b 40/450v
C27c 40/450v
C28 20/450v
NOTE DC VOLTAGE READINGS WITH NO SIGNAL INSERTED
VOLTAGE READING WITH 20000Ω/VOLT METER
ALL CAPACITORS IN MFD. & 400V UNLESS OTHERWISE SPECIFIED
ALL RESISTORS ½ W-10% UNLESS OTHERWISE SPECIFIED
POST OFFICE BOX 515
AREA CODE (201) 925-6700
ampeg
LINDEN, NEW JERSEY 07036
MODEL J-12-R
REVERBOJET
TUBE LOCATION
7591 7591 12AX7 12AX7 6U10
DRN CW 568 DRG NO. 03600 #401014F

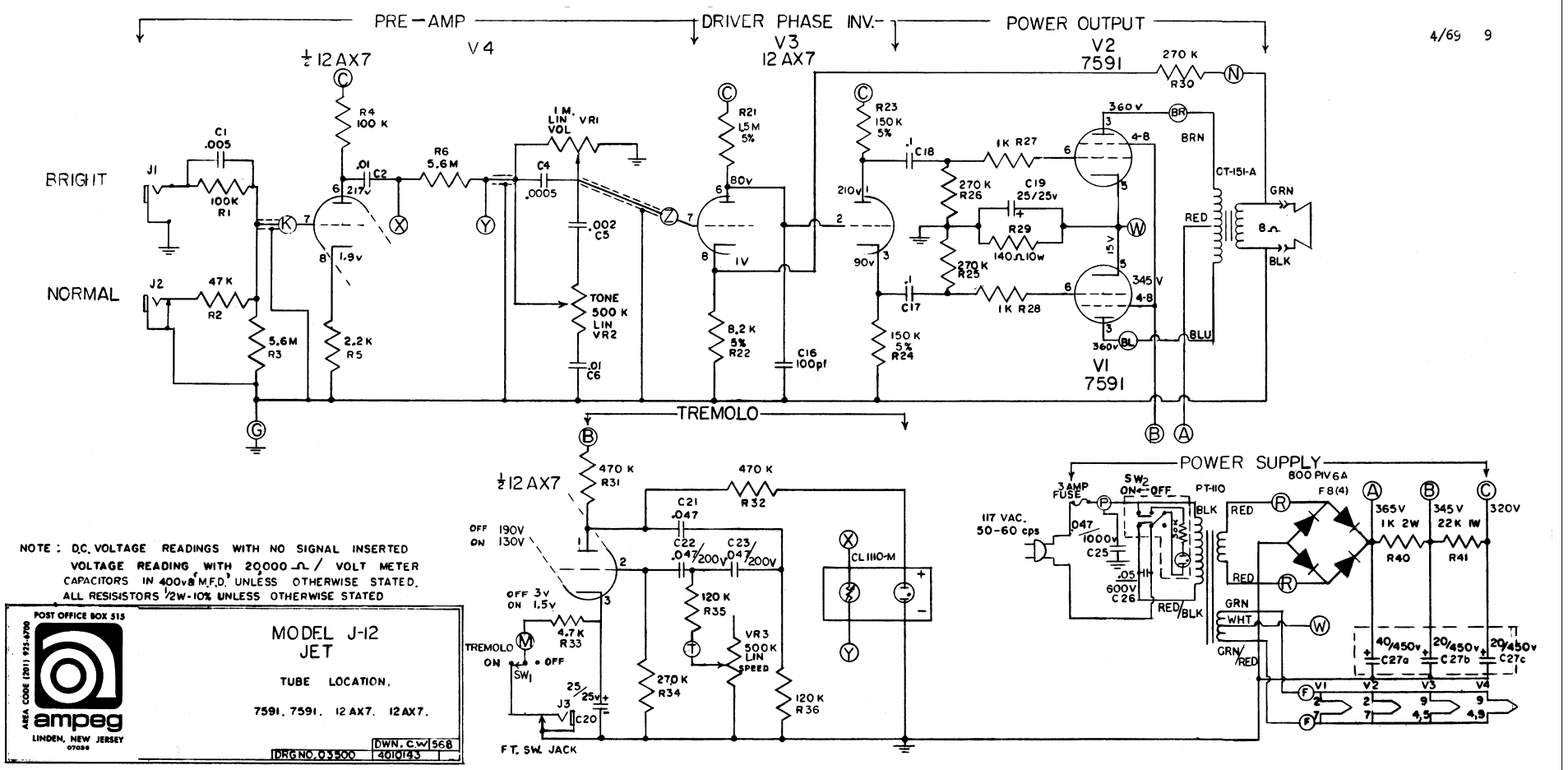
PRE-AMP
V4
½ 12AX7
DRIVER PHASE INV.
V3
12AX7
POWER OUTPUT
V2
7591
4/69 9
BRIGHT
NORMAL
J1
J2
C1 .005
100K R1
47 K R2
5.6M R3
R4 100 K
.01 C2
2.2 K R5
R6 5.6M
1 M. LIN VOL VR1
C4 .0005
.002 C5
TONE 500 K LIN VR2
.01 C6
R21 1.5M 5%
8.2 K 5% R22
C16 100pf
R23 150 K 5%
150 K 5% R24
C18
C17
1K R27
270 K R26
270 K R25
C19 25/25v
R29 140Ω 10w
1K R28
270 K R30
CT-151-A
GRN
RED
BLK
BRN
BLU
8Ω
VI 7591
TREMOLO
½ 12AX7
470 K R31
470 K R32
C21 .047
C22 .047/200v
C23 .047/200v
120 K R35
VR3 500K LIN SPEED
270 K R34
120 K R36
4.7 K R33
C20
J3
SW1
TREMOLO ON • OFF
OFF 190V ON 130V
OFF 3v ON 1.5v
FT. SW. JACK
CL 1110-M
POWER SUPPLY
3 AMP FUSE
SW2 ON-OFF
PT-110
117 VAC. 50-60 cps
.047 1000v C25
.05 HI 600V C26
800 PIV 6A
F8(4)
365V 1K 2W R40
345V 22K 1W R41
320V
40/450v C27a
20/450v C27b
20/450v C27c
GRN WHT
GRN/RED
RED/BLK
NOTE: D.C. VOLTAGE READINGS WITH NO SIGNAL INSERTED
VOLTAGE READING WITH 20,000 Ω / VOLT METER
CAPACITORS IN 400v & M.F.D. UNLESS OTHERWISE STATED.
ALL RESISISTORS ½W-10% UNLESS OTHERWISE STATED
POST OFFICE BOX 515
AREA CODE (201) 925-6700
ampeg
LINDEN, NEW JERSEY 07036
MODEL J-12
JET
TUBE LOCATION.
7591. 7591. 12AX7. 12AX7.
DWN. C.W. 568
DRG NO. 03500 4010143

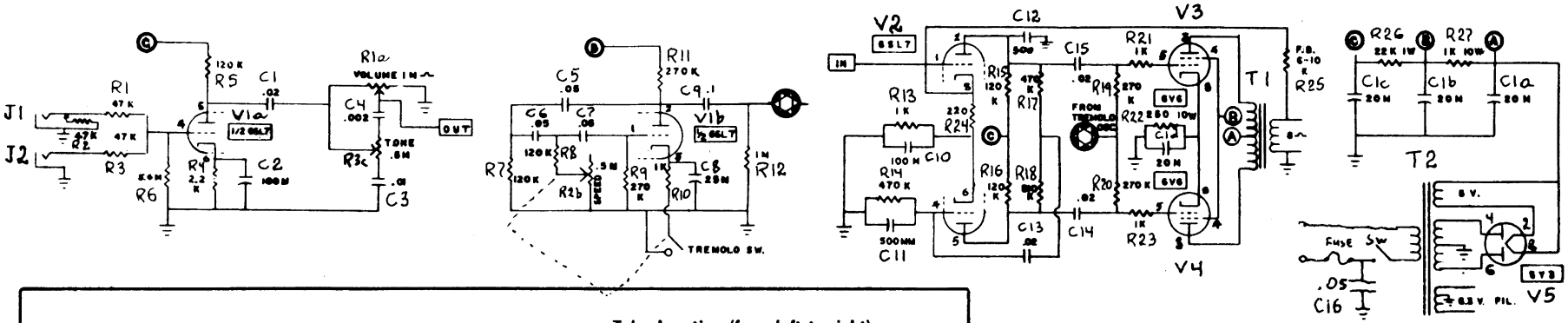

MODEL NO. J-12 B

Tube Location (from left to right)

6SL7 6SL7 6V6 6V6 5Y3

Ampeg

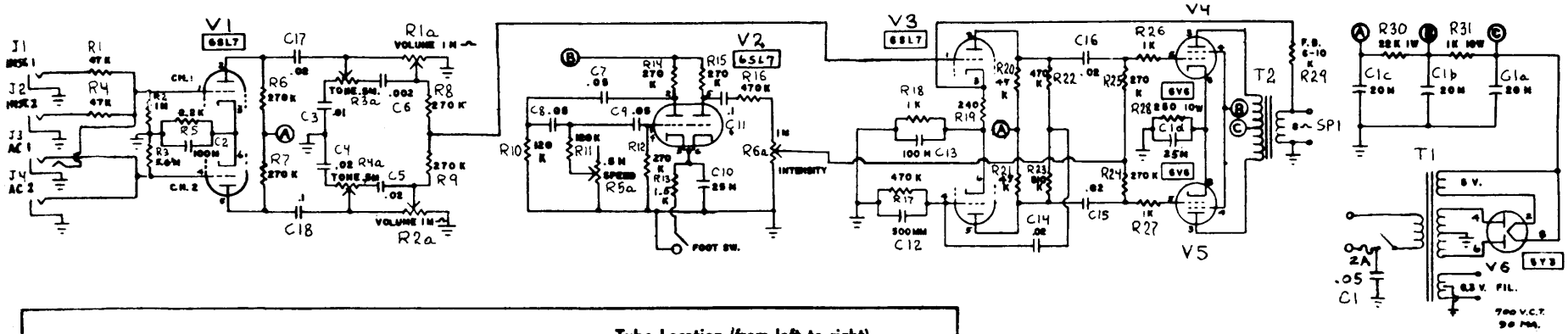

MODEL NO. M-12

Tube Location (from left to right)

6SL7 6SL7 6SL7 6V6 6V6 5Y3

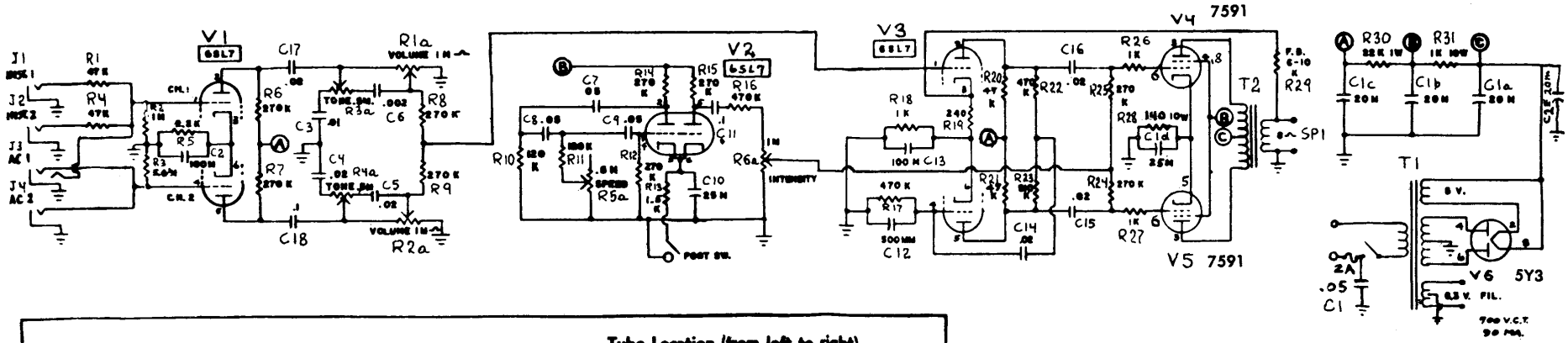

MODEL NO. M-12-A

Tube Location (from left to right)

6SL7 6SL7 6SL7 7591 7591 5Y3

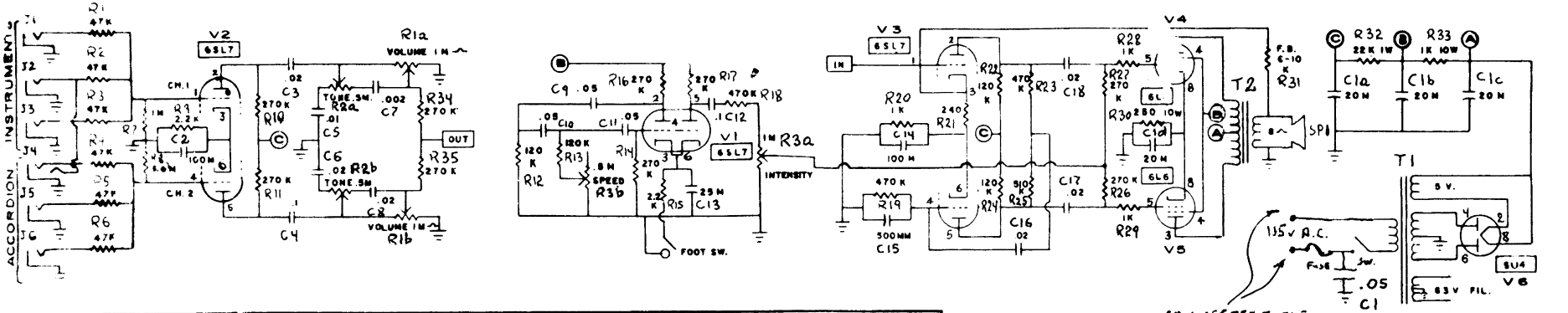

MODEL NO. M-15	Tube Location (from left to right)					
	V1	V2	V3	V4	V5	V6
SERIAL	6SL7	6SL7	6SL7	6L6	6L6	5U4

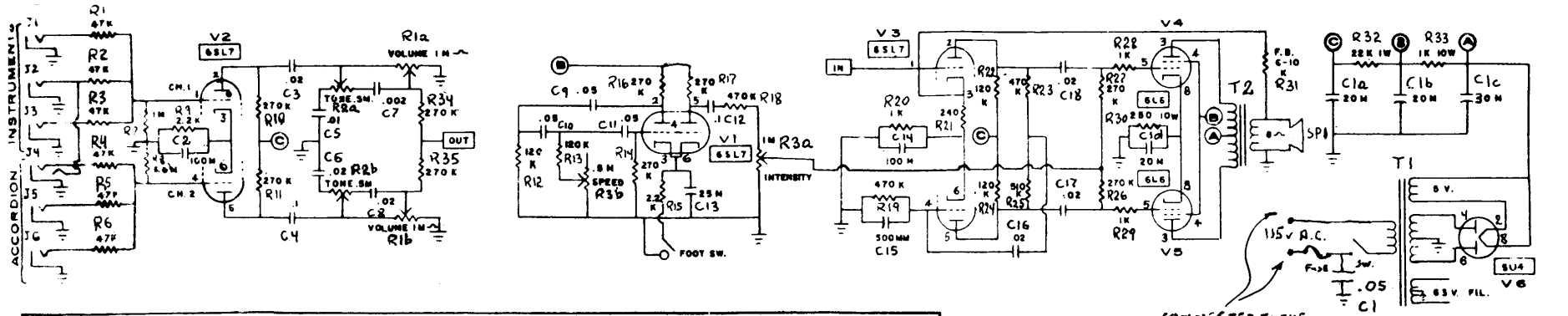

MODEL NO. M-18	Tube Location (from left to right)					
	V1	V2	V3	V4	V5	V6
SERIAL	6SL7	6SL7	6SL7	6L6	6L6	5U4

Ampeg

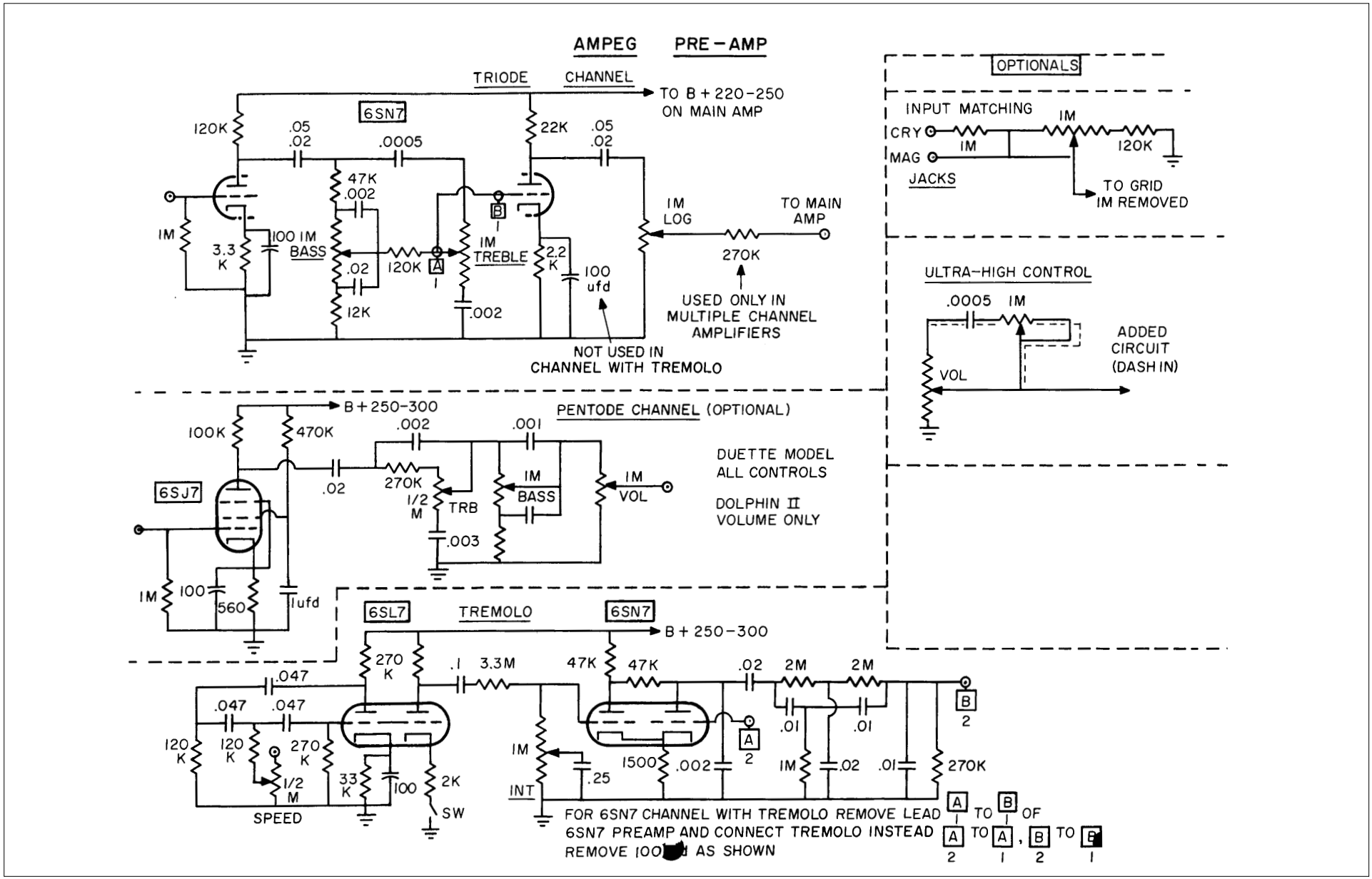
AMPEG PRE-AMP
TRIODE CHANNEL
TO B + 220-250 ON MAIN AMP
6SN7
120K
.05
.02
.0005
22K
.05
.02
47K
.002
IM
3.3 K
100 IM
BASS
.02
120K
IM TREBLE
2.2 K
100 ufd
12K
.002
IM LOG
TO MAIN AMP
270K
USED ONLY IN MULTIPLE CHANNEL AMPLIFIERS
NOT USED IN CHANNEL WITH TREMOLO
OPTIONALS
INPUT MATCHING
CRY
MAG
JACKS
IM
120K
TO GRID IM REMOVED
ULTRA-HIGH CONTROL
.0005
IM
VOL
ADDED CIRCUIT (DASH IN)
B + 250-300
PENTODE CHANNEL (OPTIONAL)
100K
470K
.002
.001
6SJ7
.02
270K
1/2 M
TRB
IM BASS
IM VOL
.003
DUETTE MODEL ALL CONTROLS
DOLPHIN II VOLUME ONLY
IM
100
560
1ufd
6SL7
TREMOLO
6SN7
B + 250-300
270 K
.1
3.3M
47K
47K
.02
2M
2M
.047
.047
.047
120 K
120 K
270 K
1/2 M
SPEED
33 K
100
2K
SW
IM
INT
.25
1500
.002
.01
.01
IM
.02
.01
270K
FOR 6SN7 CHANNEL WITH TREMOLO REMOVE LEAD OF 6SN7 PREAMP AND CONNECT TREMOLO INSTEAD REMOVE 100 ufd AS SHOWN

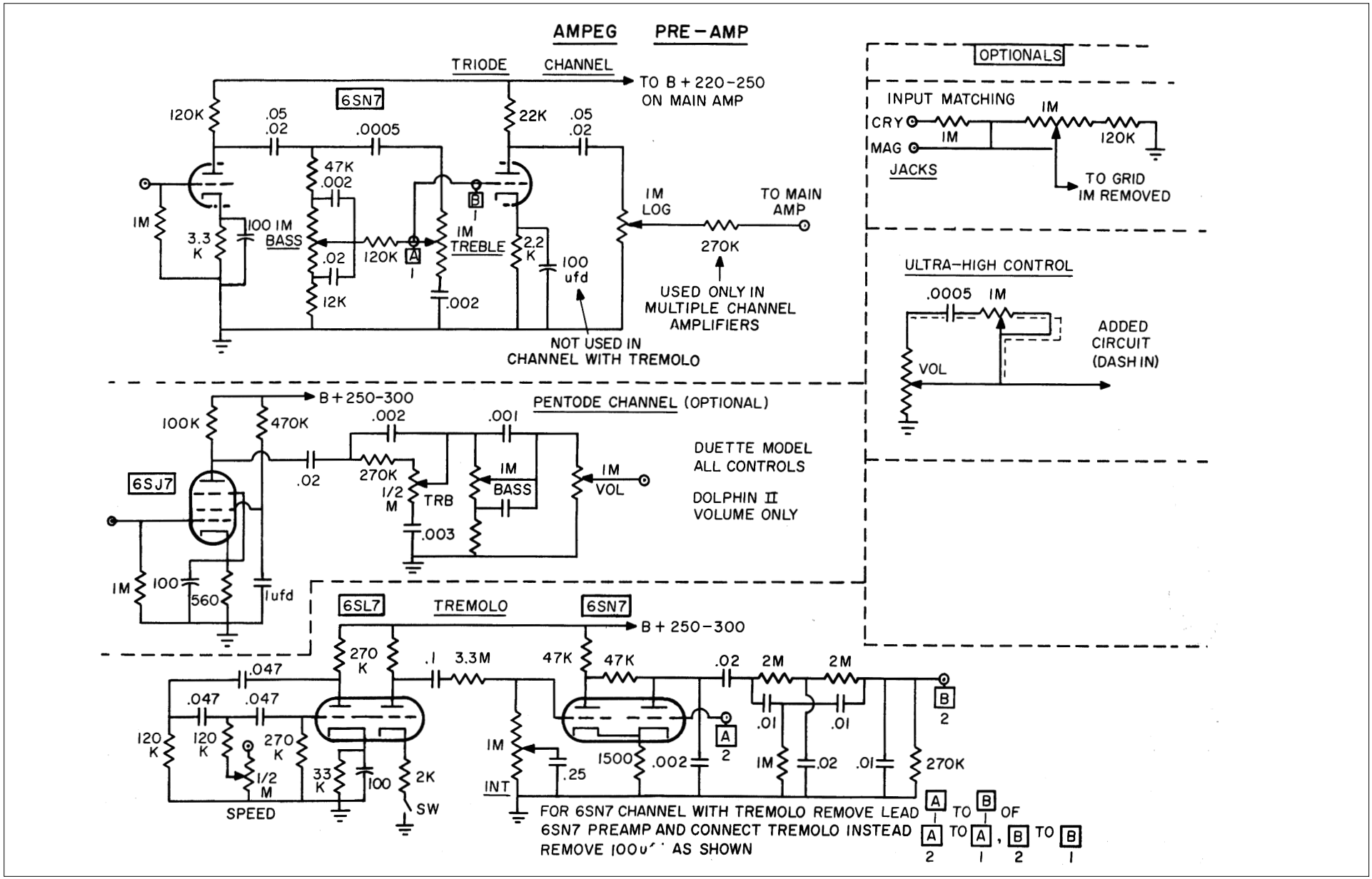
AMPEG PRE-AMP
TRIODE CHANNEL
TO B + 220-250 ON MAIN AMP
6SN7
120K
.05
.02
.0005
22K
.05
.02
47K
.002
IM
3.3 K
100 IM BASS
.02
120K
IM TREBLE
2.2 K
100 ufd
12K
.002
IM LOG
TO MAIN AMP
270K
USED ONLY IN MULTIPLE CHANNEL AMPLIFIERS
NOT USED IN CHANNEL WITH TREMOLO
OPTIONALS
INPUT MATCHING
CRY
MAG
JACKS
IM
120K
TO GRID IM REMOVED
ULTRA-HIGH CONTROL
.0005
IM
VOL
ADDED CIRCUIT (DASH IN)
B + 250-300
PENTODE CHANNEL (OPTIONAL)
100K
470K
.002
.001
6SJ7
.02
270K
1/2 M
TRB
IM BASS
IM VOL
.003
DUETTE MODEL ALL CONTROLS
DOLPHIN II VOLUME ONLY
IM
100
560
1ufd
6SL7
TREMOLO
6SN7
B + 250-300
270 K
.1
3.3M
47K
47K
.02
2M
2M
.047
.047
.047
120 K
120 K
270 K
1/2 M
SPEED
33 K
100
2K
SW
IM
INT
.25
1500
.002
.01
.01
IM
.02
.01
270K
FOR 6SN7 CHANNEL WITH TREMOLO REMOVE LEAD A1 TO B1 OF 6SN7 PREAMP AND CONNECT TREMOLO INSTEAD A2 TO A1, B2 TO B1
REMOVE 100ufd AS SHOWN

R-12 **ROCKET**

Ampeg

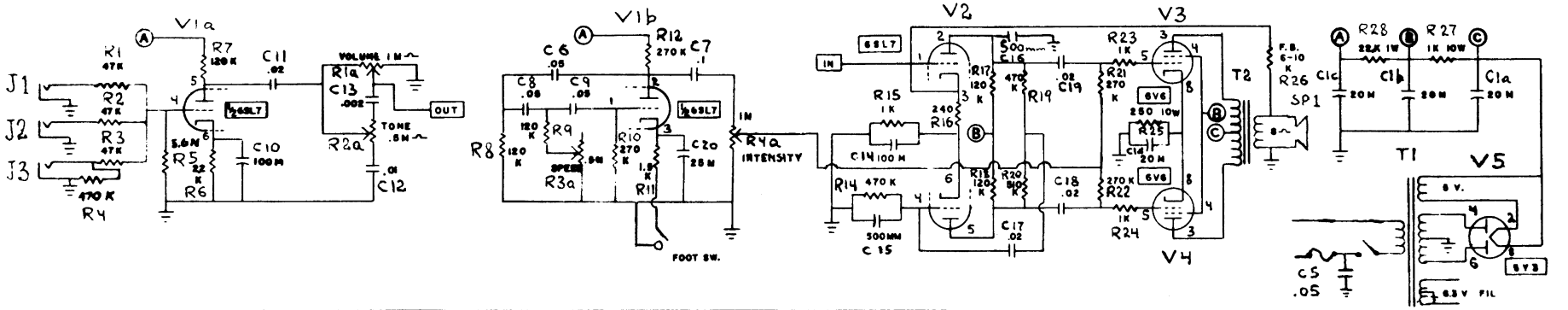

MODEL NO. R-12

Tube Location (from left to right)

6SL7 6SL7 6V6 6V6 5Y3

the Ampeg co., inc.
INDUSTRIAL PARK LINDEN N J
PHONE 201 9[illegible]-6700

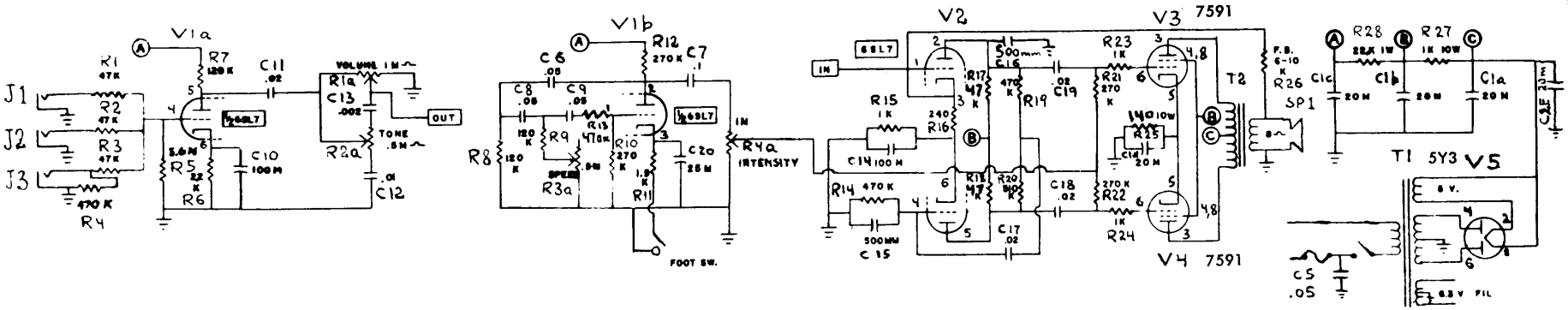

MODEL NO. R-12-A

Tube Location (from left to right)

6SL7 6SL7 7591 7591 5Y3

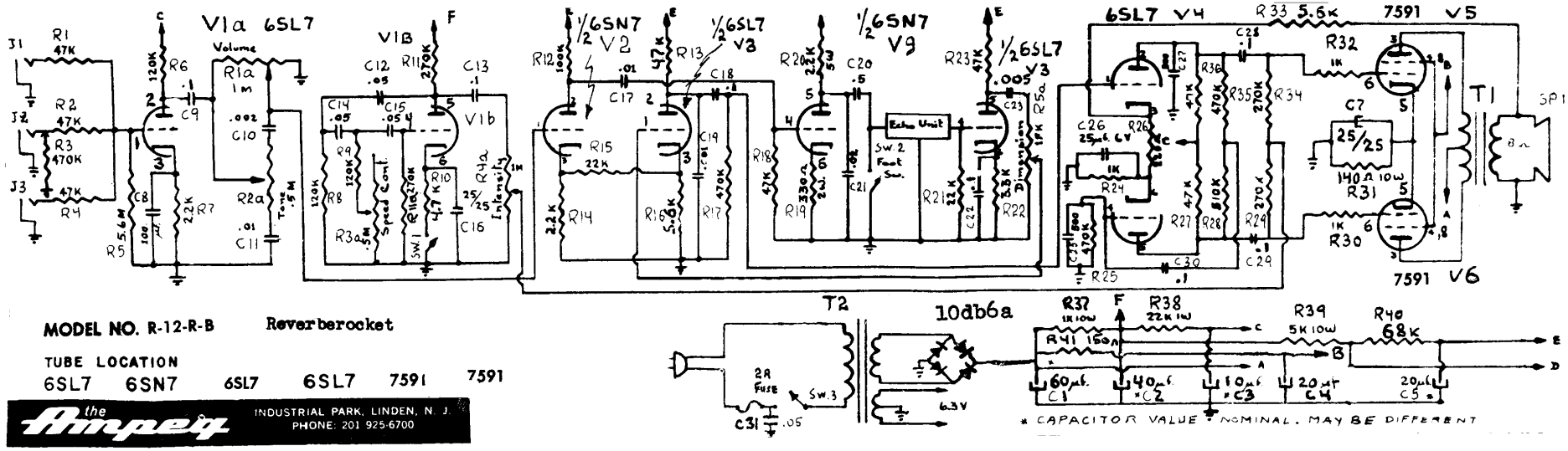

MODEL NO. R-12-R-B Reverberocket

TUBE LOCATION

6SL7 6SN7 6SL7 6SL7 7591 7591

the Ampeg
INDUSTRIAL PARK, LINDEN, N. J.
PHONE: 201 925-6700

R-12R **REVERB ROCKET**

Ampeg

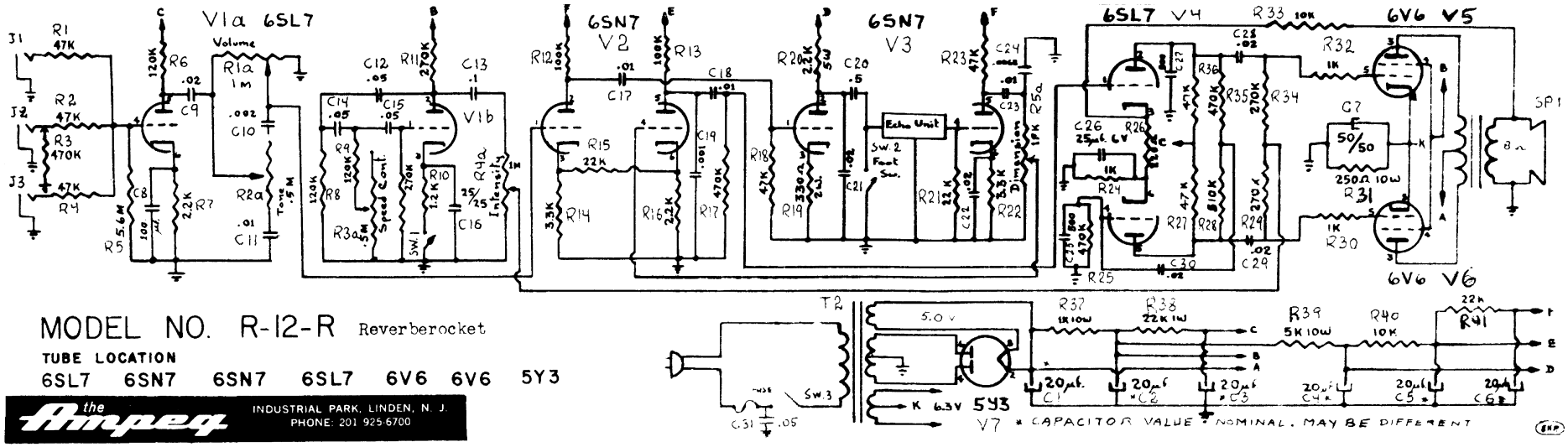

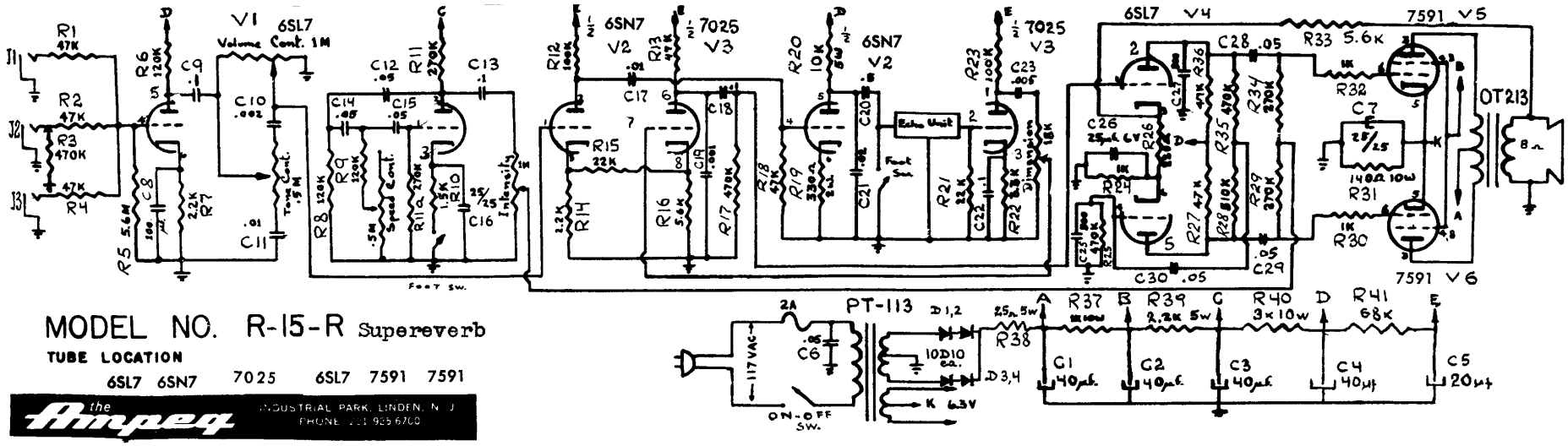
MODEL NO. R-15-R Supereverb
TUBE LOCATION
6SL7 6SN7 7025 6SL7 7591 7591
the Ampeg
INDUSTRIAL PARK, LINDEN, N. J.
PHONE 121 925 6700
V1 6SL7
Volume Cont. 1M
Tone Cont.
Speed Cont.
Intensity
Foot sw.
V2 6SN7
V3 7025
Echo Unit
Foot Sw.
Dimpson
V4 6SL7
V5 7591
V6 7591
OT213
PT-113
117VAC
ON-OFF SW.
K 6.3V

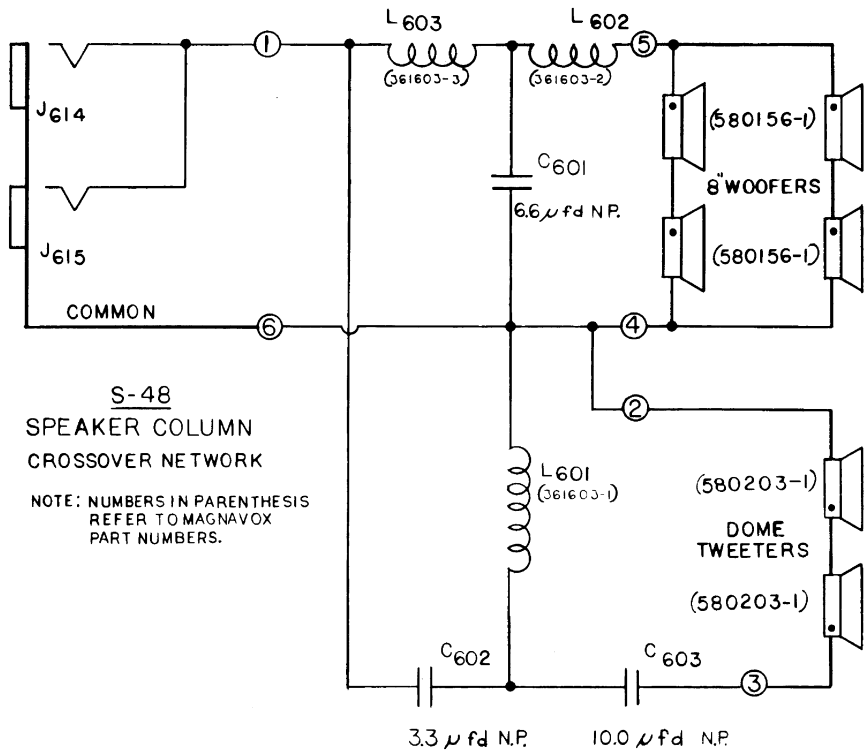

ampeg

The Ampeg Company

Division of The Magnavox Company

P. O. Box 310, Elkhart, Indiana 46514

Part No. 591744-1

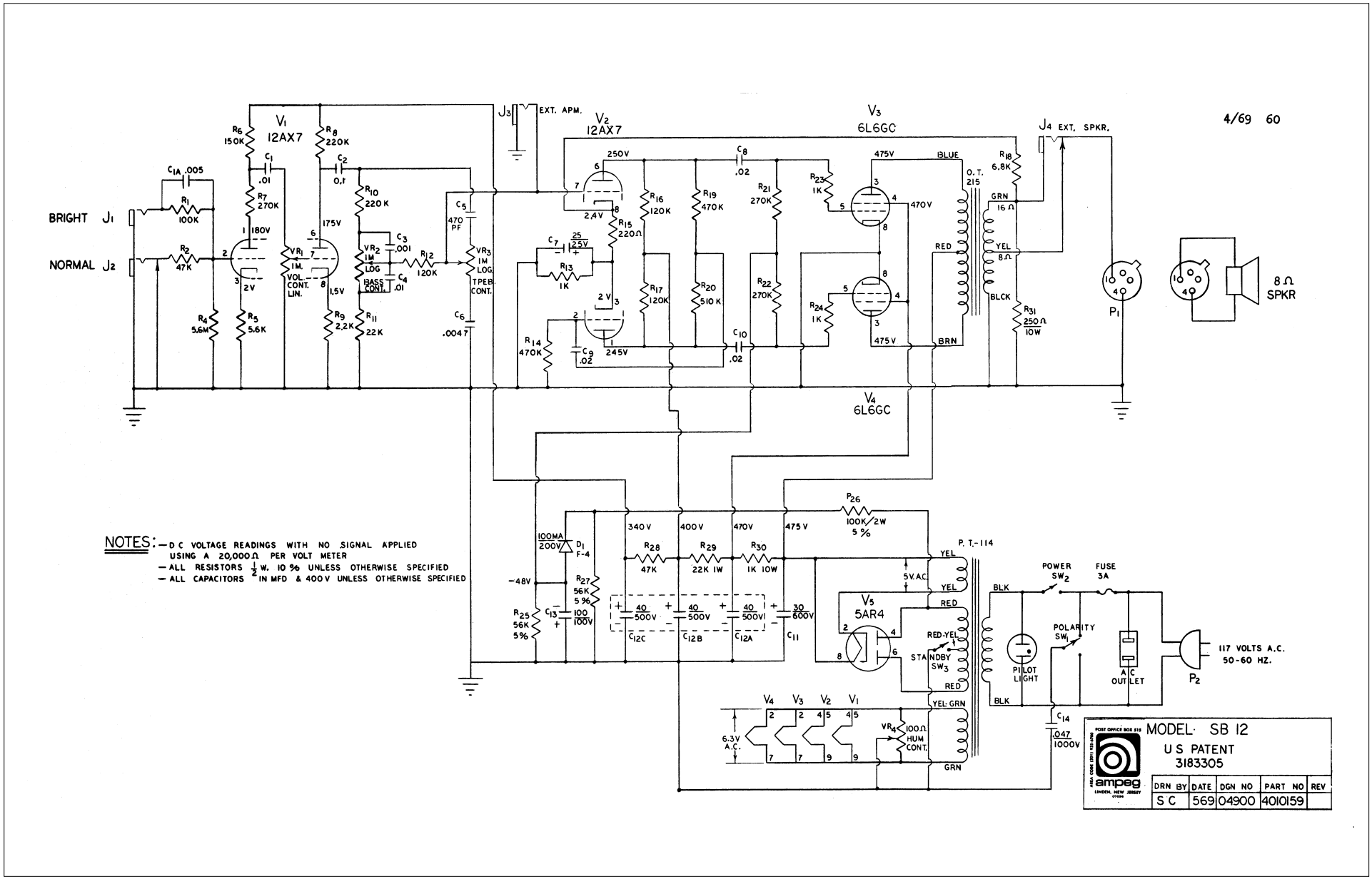
4/69 60
BRIGHT J1
NORMAL J2
V1 12AX7
V2 12AX7
V3 6L6GC
V4 6L6GC
V5 5AR4
J3 EXT. APM.
J4 EXT. SPKR.
P1
P2
8 Ω SPKR
O.T. 215
P.T.-114
POWER SW2
FUSE 3A
POLARITY SW1
STANDBY SW3
PILOT LIGHT
A C OUTLET
117 VOLTS A.C. 50-60 HZ.
VR1 1M. VOL. CONT. LIN.
VR2 1M LOG BASS CONT.
VR3 1M LOG TREB. CONT.
VR4 100Ω HUM CONT.
P26 100K/2W 5%
R25 56K 5%
R27 56K 5%
D1 F-4
100MA 200V
-48V
6.3V A.C.
5V.A.C.
NOTES:
— D C VOLTAGE READINGS WITH NO SIGNAL APPLIED USING A 20,000Ω PER VOLT METER
— ALL RESISTORS ½ W. 10 % UNLESS OTHERWISE SPECIFIED
— ALL CAPACITORS IN MFD & 400 V UNLESS OTHERWISE SPECIFIED
MODEL SB 12
U S PATENT 3183305
ampeg
LINDEN, NEW JERSEY
DRN BY | DATE | DGN NO | PART NO | REV
S C | 569 | 04900 | 4010159

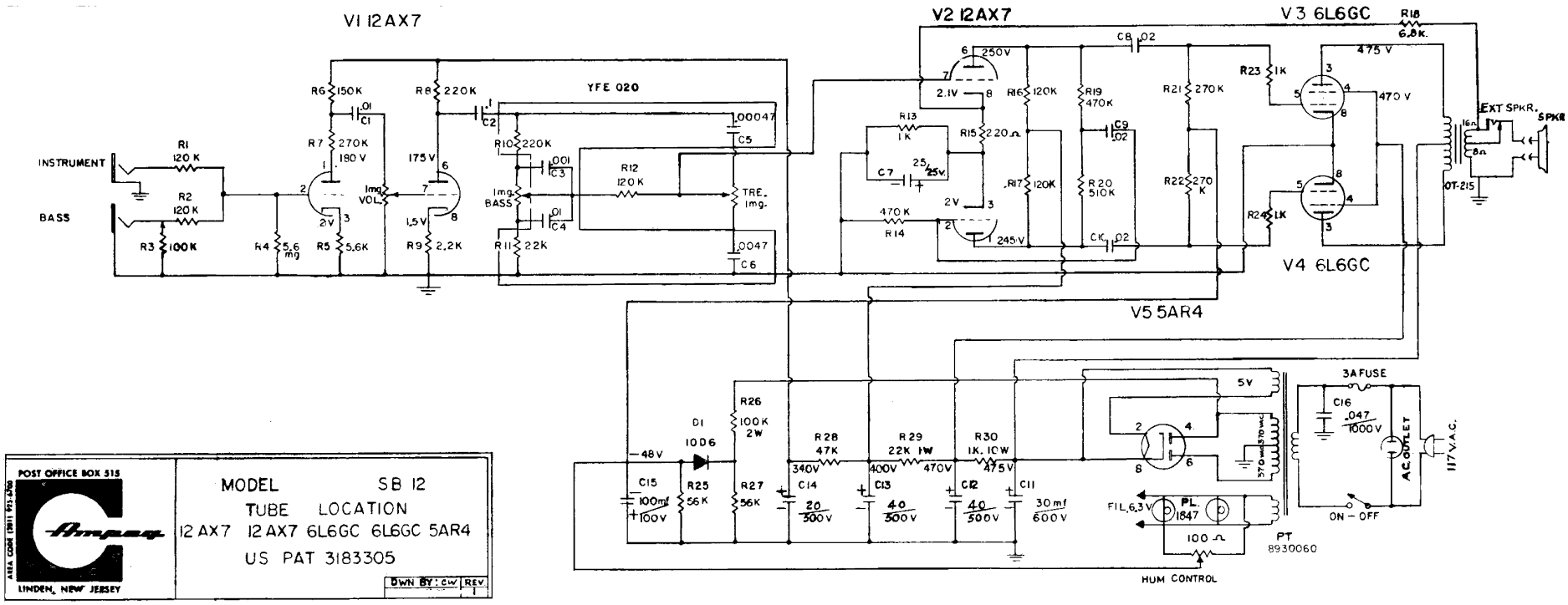
V1 12AX7
V2 12AX7
V3 6L6GC
V4 6L6GC
V5 5AR4
YFE 020
INSTRUMENT
BASS
R1 120K
R2 120K
R3 100K
R4 5.6 mg
R5 5.6K
R6 150K
R7 270K
180 V
R8 220K
175 V
R9 2.2K
R10 220K
R11 22K
R12 120K
R13 1K
R14 470K
R15 220Ω
R16 120K
R17 120K
R18 6.8K.
R19 470K
R20 510K
R21 270K
R22 270K
R23 1K
R24 1K
C1 .01
C2 1
C3 .001
C4 .01
C5 .00047
C6 .0047
C7 25
C8 .02
C9 .02
C10 .02
Img VOL
Img BASS
TRE. Img.
250V
2.1V
245V
475 V
470 V
EXT SPKR.
SPKR
16Ω
8Ω
OT-215
D1 1006
R26 100K 2W
R25 56K
R27 56K
R28 47K
R29 22K 1W
R30 1K. 10W
C11 30mf 600V
C12 40 500V
C13 40 500V
C14 20 500V
C15 100mf 100V
C16 .047 1000V
-48V
340V
400V
470V
475V
5V
370mA
FIL. 6.3V
PL. 1847
100Ω
HUM CONTROL
PT 8930060
3A FUSE
ON - OFF
AC OUTLET
117 V.A.C.
POST OFFICE BOX 515
LINDEN, NEW JERSEY
MODEL SB 12
TUBE LOCATION
12 AX7 12 AX7 6L6GC 6L6GC 5AR4
US PAT 3183305
DWN BY: CW
REV.

SBT **PREAMP**

Ampeg

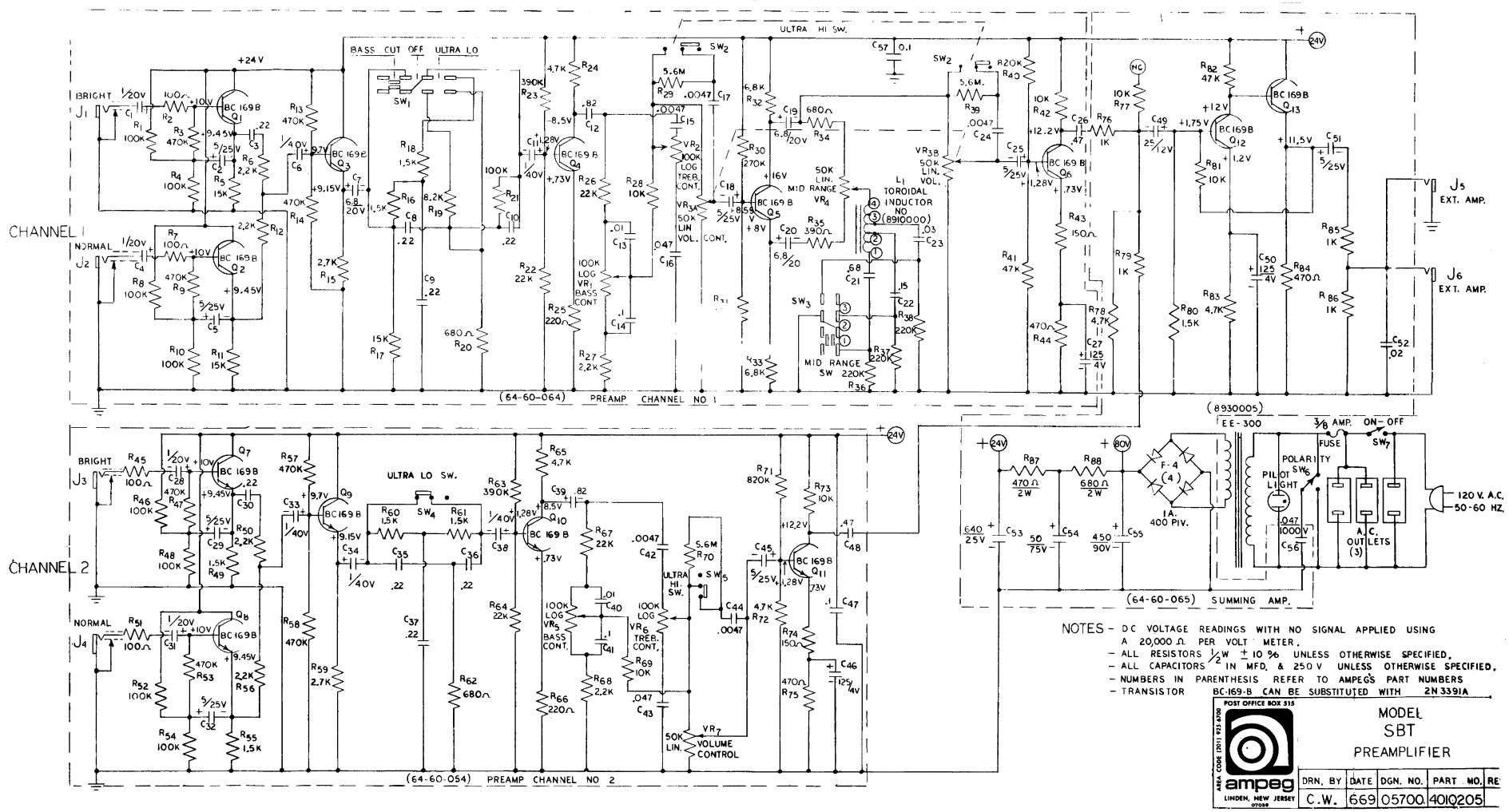

MODEL SR4 SCHEMATIC DIAGRAM

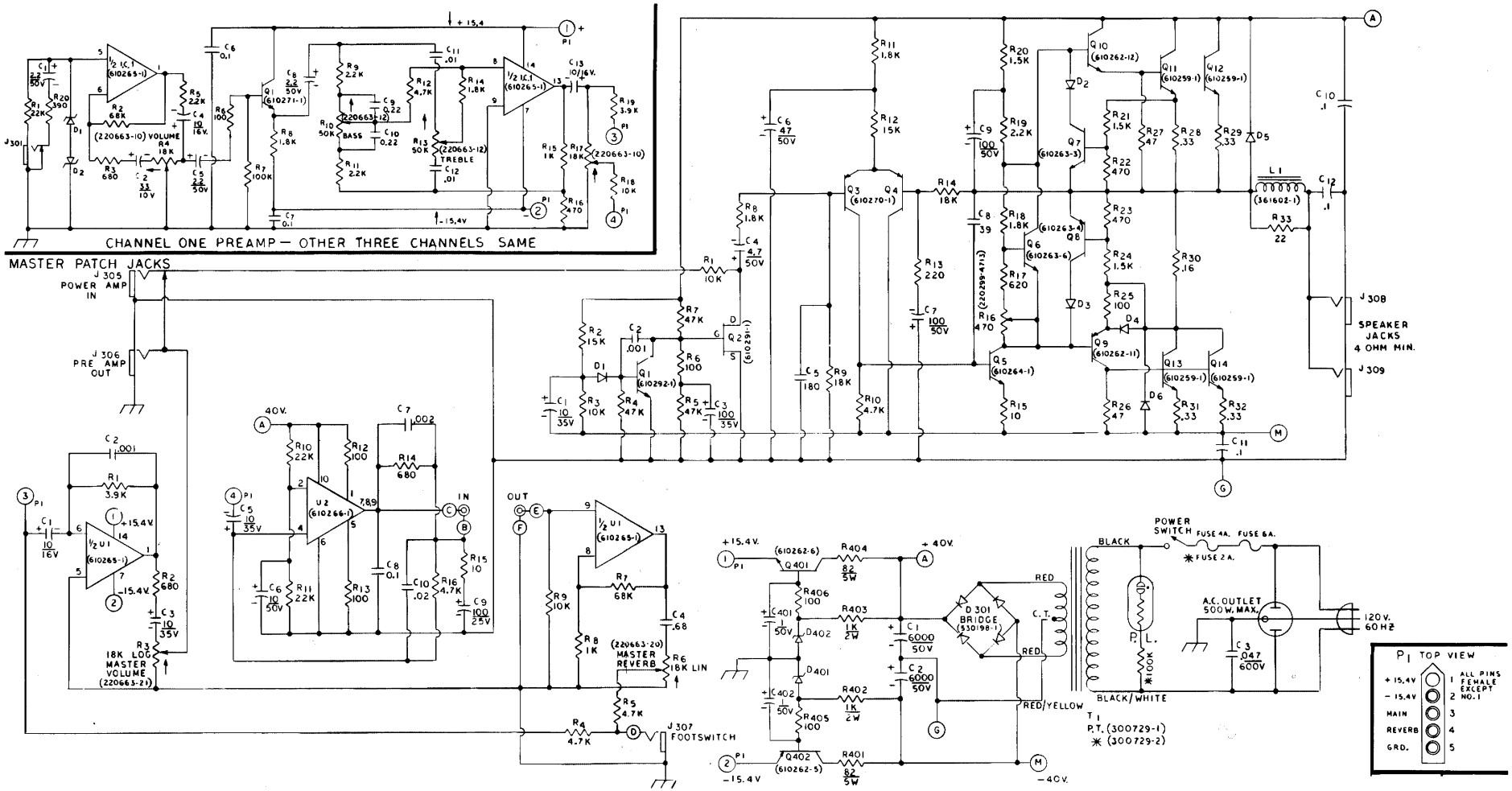

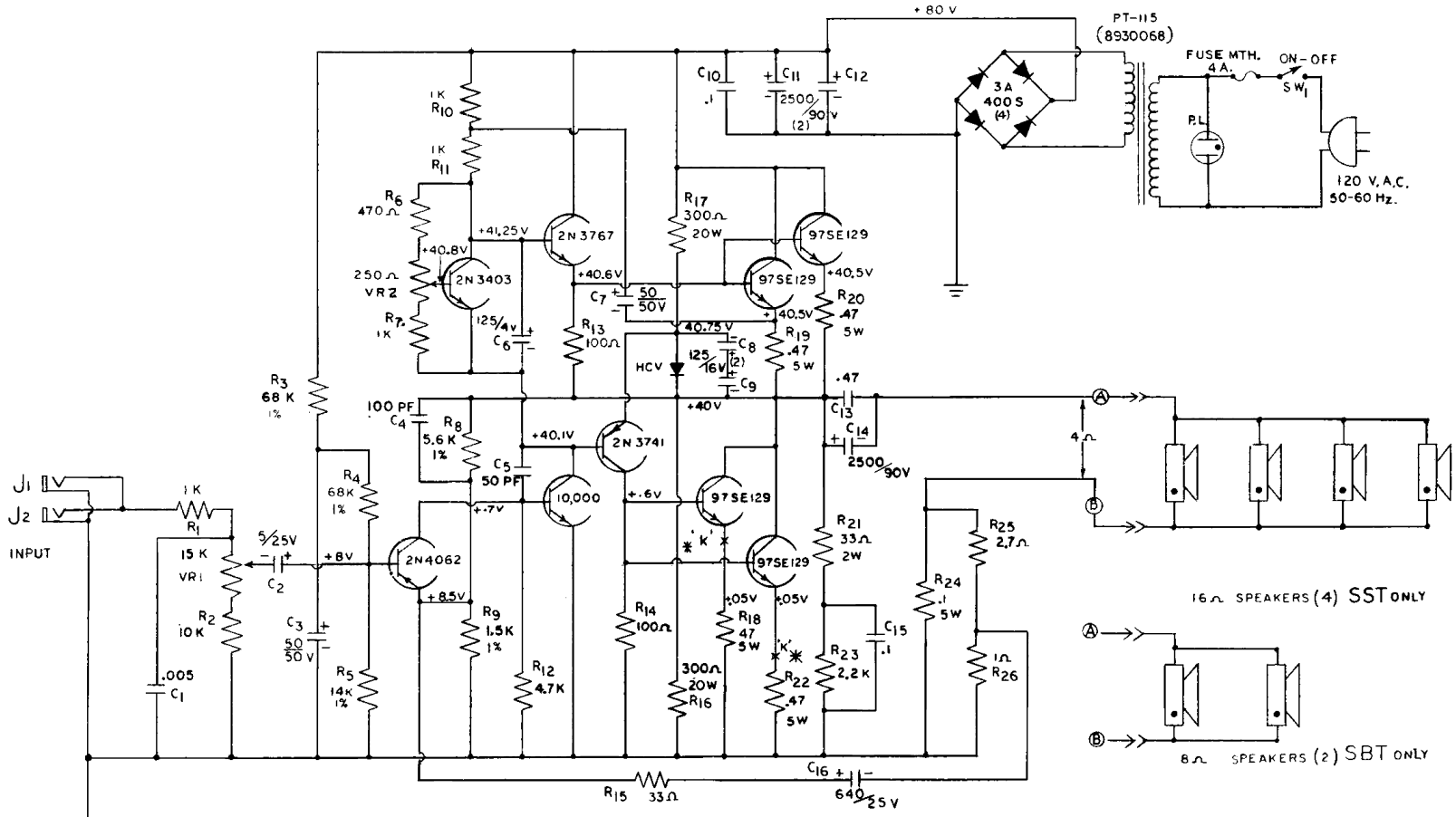

NOTES

- ALL RESISTORS ½ W. ± 10% UNLESS OTHERWISE SPECIFIED.
- ALL CAPACITORS IN MFD. & 250V UNLESS OTHERWISE SPECIFIED
- THE TRANSISTORS 97SE129 CAN BE SUBSTITUTED WITH 10003 OR 40411
- 4 AMP FUSE MUST BE 125V RATING.

✳ - ADJUST VR2 SO THAT THE VOLTAGE AT POINTS 'K' READ +.05V

NUMBERS IN PARENTHESIS REFER TO AMPEG'S PART NO

POST OFFICE BOX 515
AREA CODE (201) 925-6700
ampeg
LINDEN, NEW JERSEY 07036

MODELS
SST SBT
POWER
AMPLIFIER

DRN.BY.	DATE	DWG NO	PART NO	REV
CW	6.2.69	04703	4010126	

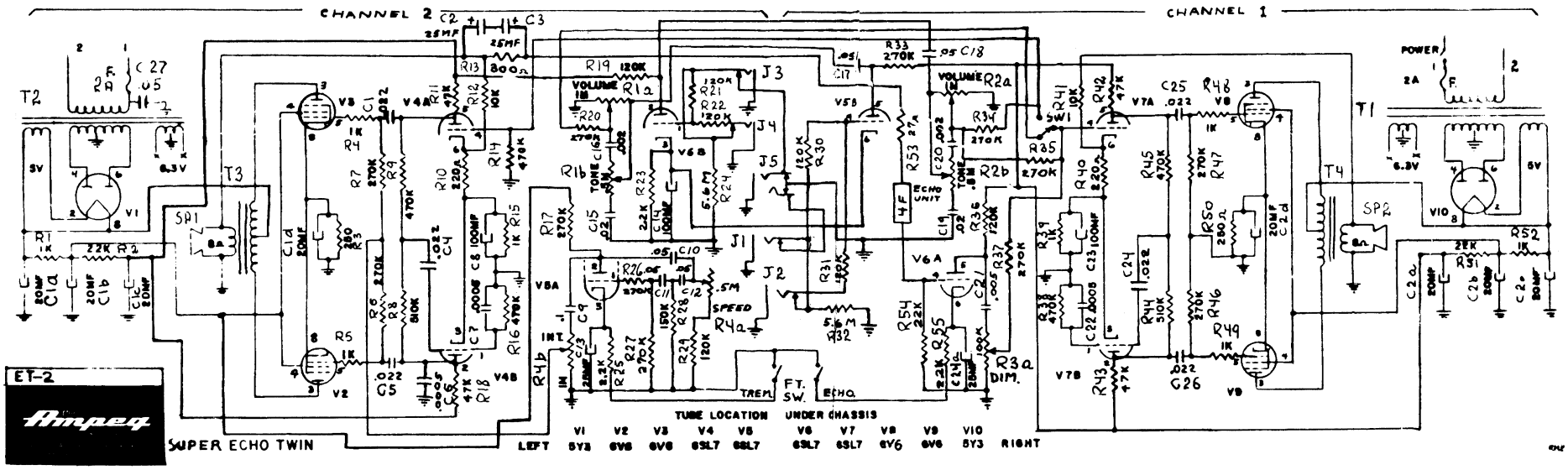
CHANNEL 2
CHANNEL 1
POWER
VOLUME
TONE
ECHO UNIT
SPEED
INT.
TREM.
F.T. SW.
ECHO
DIM.
TUBE LOCATION UNDER CHASSIS
V1 V2 V3 V4 V5 V6 V7 V8 V9 V10
LEFT 5Y3 6V6 6V6 6SL7 6SL7 6SL7 6SL7 6V6 6V6 5Y3 RIGHT
ET-2
Ampeg
SUPER ECHO TWIN

SVT **(REV A)**

Ampeg

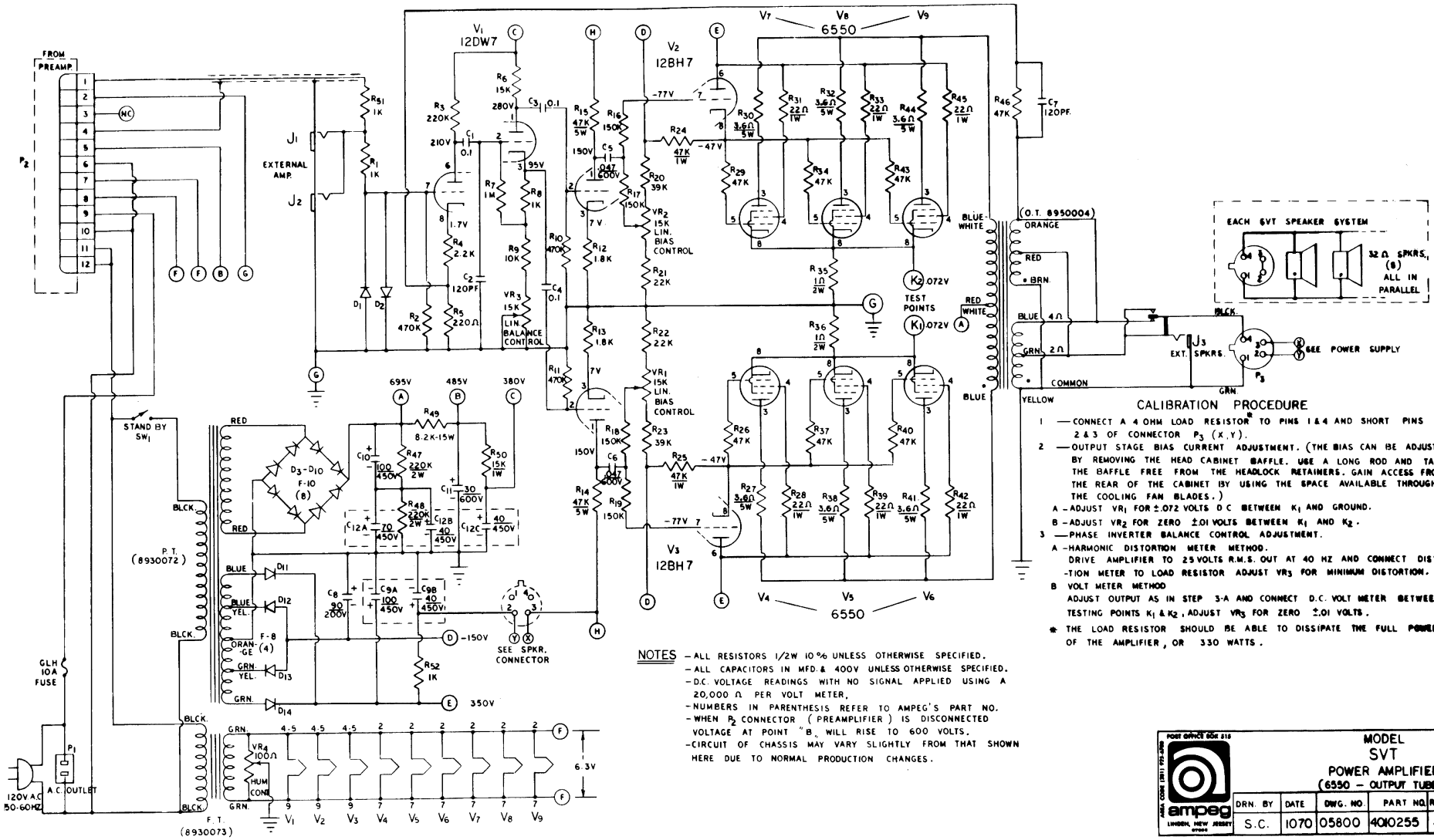

NOTES
- ALL RESISTORS 1/2W 10% UNLESS OTHERWISE SPECIFIED.
- ALL CAPACITORS IN MFD. & 400V UNLESS OTHERWISE SPECIFIED.
- D.C. VOLTAGE READINGS WITH NO SIGNAL APPLIED USING A 20,000 Ω PER VOLT METER.
- NUMBERS IN PARENTHESIS REFER TO AMPEG'S PART NO.
- WHEN P_2 CONNECTOR (PREAMPLIFIER) IS DISCONNECTED VOLTAGE AT POINT "B" WILL RISE TO 600 VOLTS.
- CIRCUIT OF CHASSIS MAY VARY SLIGHTLY FROM THAT SHOWN HERE DUE TO NORMAL PRODUCTION CHANGES.

CALIBRATION PROCEDURE

1 — CONNECT A 4 OHM LOAD RESISTOR* TO PINS 1 & 4 AND SHORT PINS 2 & 3 OF CONNECTOR P_3 (X, Y).

2 — OUTPUT STAGE BIAS CURRENT ADJUSTMENT. (THE BIAS CAN BE ADJUSTED BY REMOVING THE HEAD CABINET BAFFLE. USE A LONG ROD AND TAP THE BAFFLE FREE FROM THE HEADLOCK RETAINERS. GAIN ACCESS FROM THE REAR OF THE CABINET BY USING THE SPACE AVAILABLE THROUGH THE COOLING FAN BLADES.)

A - ADJUST VR_1 FOR ±.072 VOLTS D.C. BETWEEN K_1 AND GROUND.

B - ADJUST VR_2 FOR ZERO ±.01 VOLTS BETWEEN K_1 AND K_2.

3 — PHASE INVERTER BALANCE CONTROL ADJUSTMENT.

A - HARMONIC DISTORTION METER METHOD.
DRIVE AMPLIFIER TO 25 VOLTS R.M.S. OUT AT 40 HZ AND CONNECT DISTORTION METER TO LOAD RESISTOR ADJUST VR_3 FOR MINIMUM DISTORTION.

B VOLT METER METHOD
ADJUST OUTPUT AS IN STEP 3-A AND CONNECT D.C. VOLT METER BETWEEN TESTING POINTS K_1 & K_2, ADJUST VR_3 FOR ZERO ±.01 VOLTS.

* THE LOAD RESISTOR SHOULD BE ABLE TO DISSIPATE THE FULL POWER OF THE AMPLIFIER, OR 330 WATTS.

POST OFFICE BOX 518
AREA CODE (201) 925-4000
ampeg
LINDEN, NEW JERSEY 07036

MODEL
SVT
POWER AMPLIFIER
(6550 – OUTPUT TUBES)

DRN. BY	DATE	DWG. NO.	PART NO.	REV.
S.C.	1070	05800	4010255	A

SVT **POWER AMP (REV D)**

Ampeg

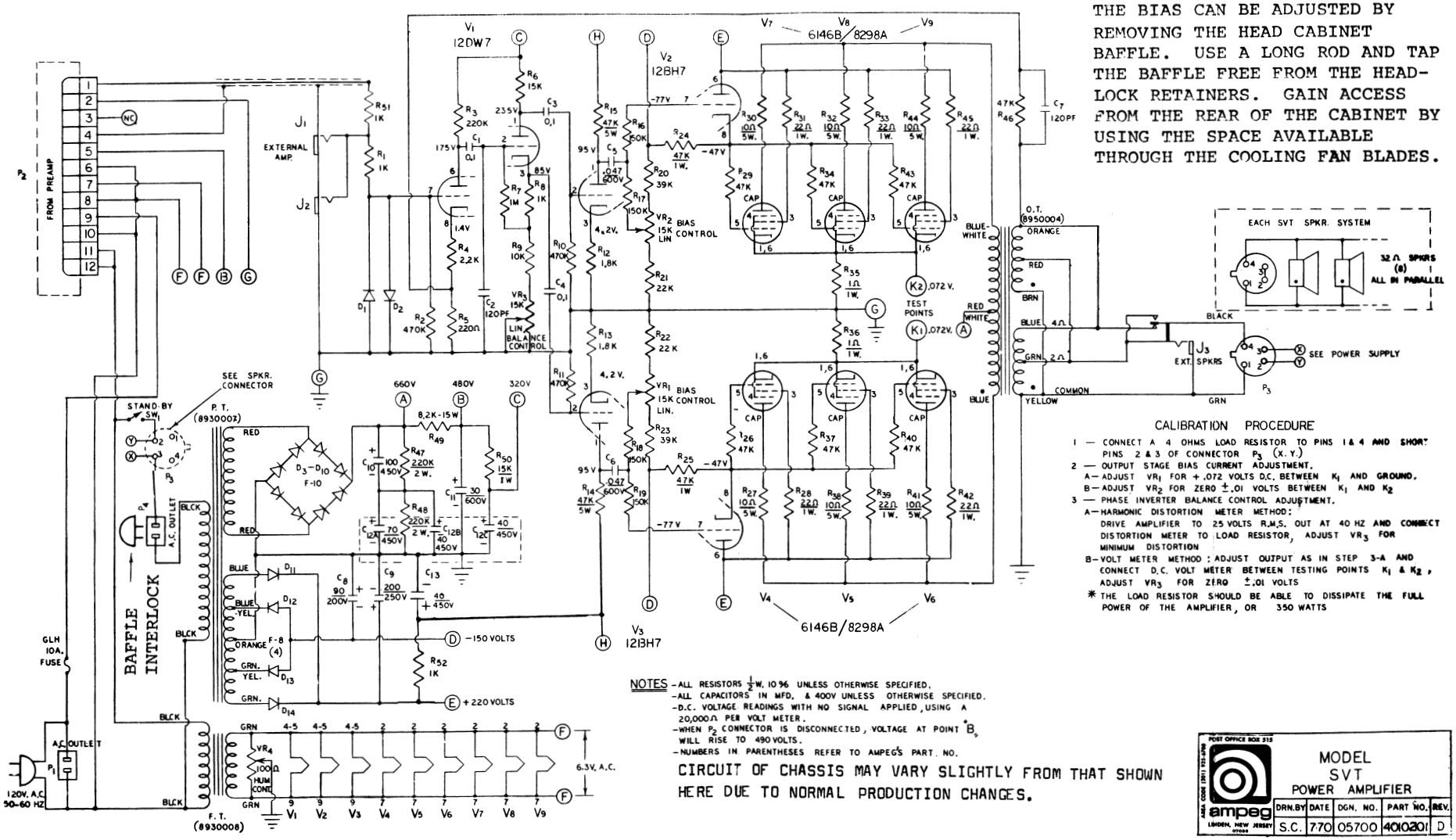

SVT **POWER AMP (REV F)**

Ampeg

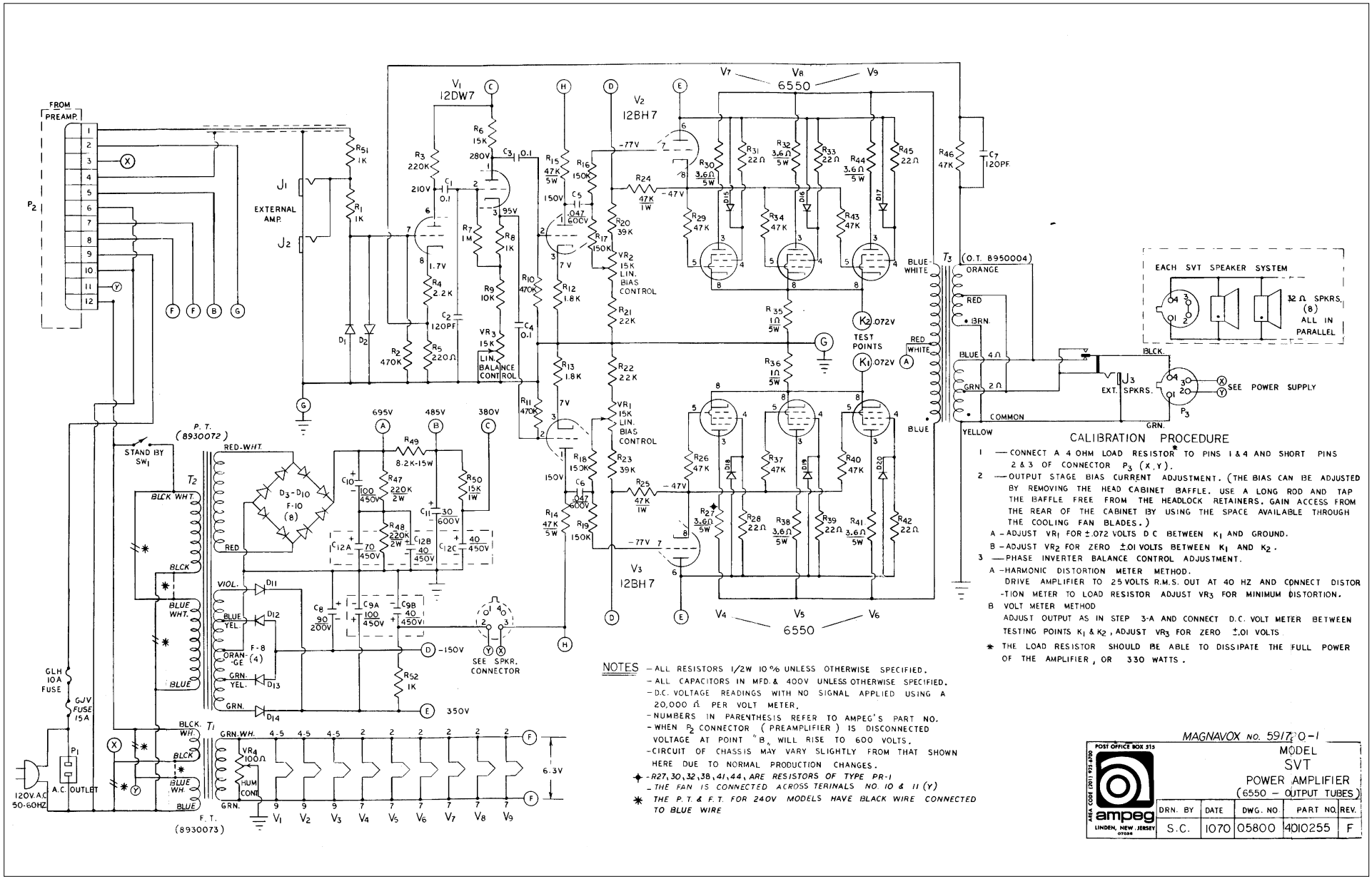

CALIBRATION PROCEDURE

1 — CONNECT A 4 OHM LOAD RESISTOR* TO PINS 1 & 4 AND SHORT PINS 2 & 3 OF CONNECTOR P_3 (X, Y).

2 — OUTPUT STAGE BIAS CURRENT ADJUSTMENT. (THE BIAS CAN BE ADJUSTED BY REMOVING THE HEAD CABINET BAFFLE. USE A LONG ROD AND TAP THE BAFFLE FREE FROM THE HEADLOCK RETAINERS. GAIN ACCESS FROM THE REAR OF THE CABINET BY USING THE SPACE AVAILABLE THROUGH THE COOLING FAN BLADES.)

A – ADJUST VR_1 FOR ±.072 VOLTS D C BETWEEN K_1 AND GROUND.

B – ADJUST VR_2 FOR ZERO ±.01 VOLTS BETWEEN K_1 AND K_2.

3 — PHASE INVERTER BALANCE CONTROL ADJUSTMENT.

A – HARMONIC DISTORTION METER METHOD.
DRIVE AMPLIFIER TO 25 VOLTS R.M.S. OUT AT 40 HZ AND CONNECT DISTORTION METER TO LOAD RESISTOR ADJUST VR_3 FOR MINIMUM DISTORTION.

B VOLT METER METHOD
ADJUST OUTPUT AS IN STEP 3-A AND CONNECT D.C. VOLT METER BETWEEN TESTING POINTS K_1 & K_2, ADJUST VR_3 FOR ZERO ±.01 VOLTS

* THE LOAD RESISTOR SHOULD BE ABLE TO DISSIPATE THE FULL POWER OF THE AMPLIFIER, OR 330 WATTS.

NOTES
- ALL RESISTORS 1/2W 10% UNLESS OTHERWISE SPECIFIED.
- ALL CAPACITORS IN MFD. & 400V UNLESS OTHERWISE SPECIFIED.
- D.C. VOLTAGE READINGS WITH NO SIGNAL APPLIED USING A 20,000 Ω PER VOLT METER.
- NUMBERS IN PARENTHESIS REFER TO AMPEG'S PART NO.
- WHEN P_2 CONNECTOR (PREAMPLIFIER) IS DISCONNECTED VOLTAGE AT POINT "B" WILL RISE TO 600 VOLTS.
- CIRCUIT OF CHASSIS MAY VARY SLIGHTLY FROM THAT SHOWN HERE DUE TO NORMAL PRODUCTION CHANGES.

✦ - R27, 30, 32, 38, 41, 44, ARE RESISTORS OF TYPE PR-1
- THE FAN IS CONNECTED ACROSS TERINALS NO. 10 & 11 (Y)

✱ THE P.T. & F.T. FOR 240V MODELS HAVE BLACK WIRE CONNECTED TO BLUE WIRE

MAGNAVOX No. 5917-0-1

POST OFFICE BOX 513 — AREA CODE (201) 925-8000 — ampeg — LINDEN, NEW JERSEY 07036

MODEL SVT POWER AMPLIFIER (6550 – OUTPUT TUBES)

DRN. BY	DATE	DWG. NO	PART NO.	REV.
S.C.	1070	05800	4010255	F

SVT **PREAMP**

Ampeg

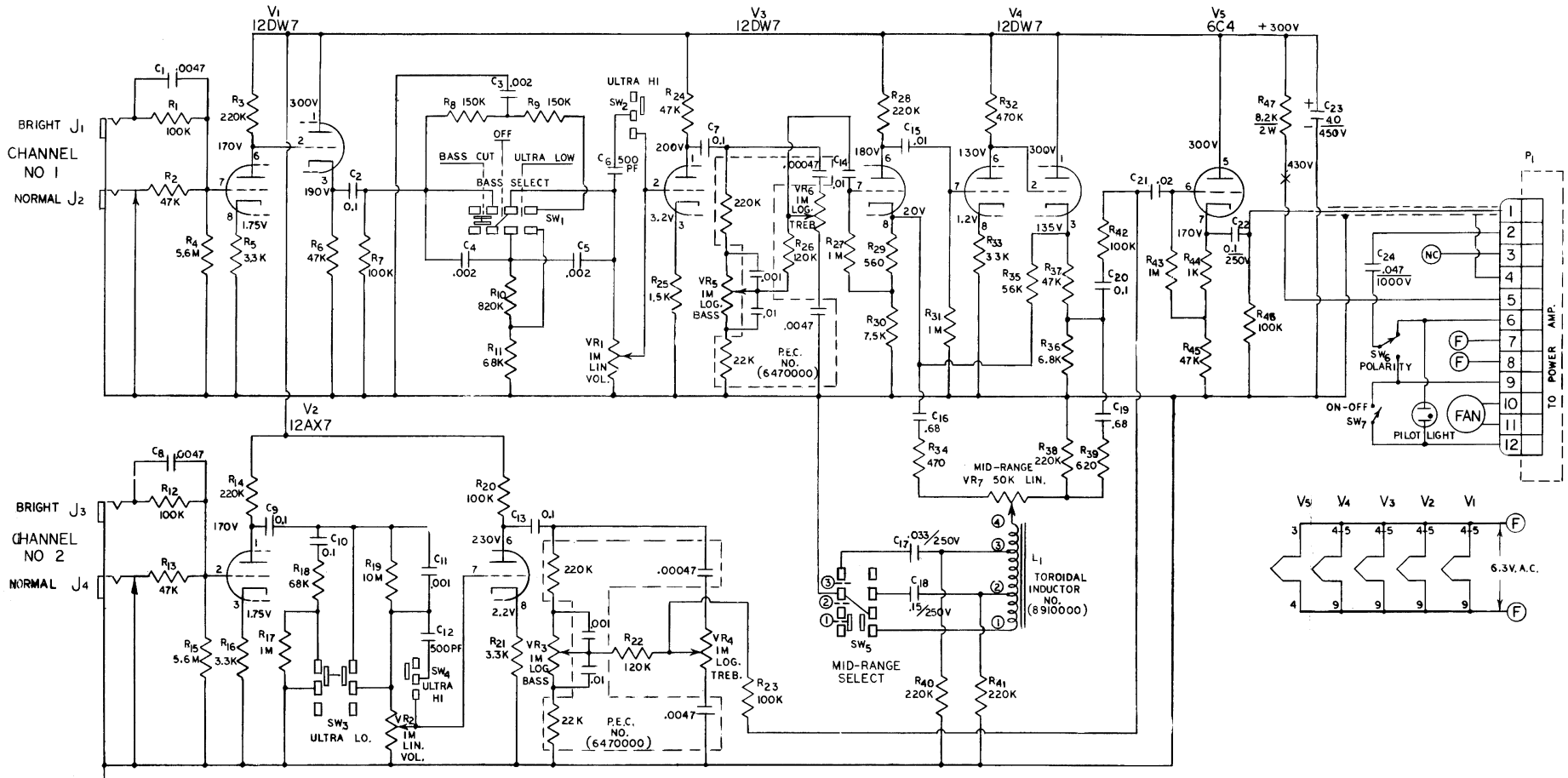

NOTES
- ALL RESISTORS IN OHMS ½W 10% UNLESS OTHERWISE SPECIFIED.
- ALL CAPACITORS IN MFD & 400V " " "
- DC VOLTAGE READINGS WITH NO SIGNAL APPLIED USING A 20,000 Ω PER VOLT VOLTMETER.
- NUMBERS IN PARENTHESES REFER TO AMPEG'S PART NO.

POST OFFICE BOX 515
AREA CODE (201) 925-4700
ampeg
LINDEN, NEW JERSEY 07036

MODEL
SVT PREAMP
U.S. PATENT PENDING

DRN. BY	DATE	DNG. NO.	PART NO.	REV.
S.C.	669	05804	4010204	

SVT **PREAMP**

Ampeg

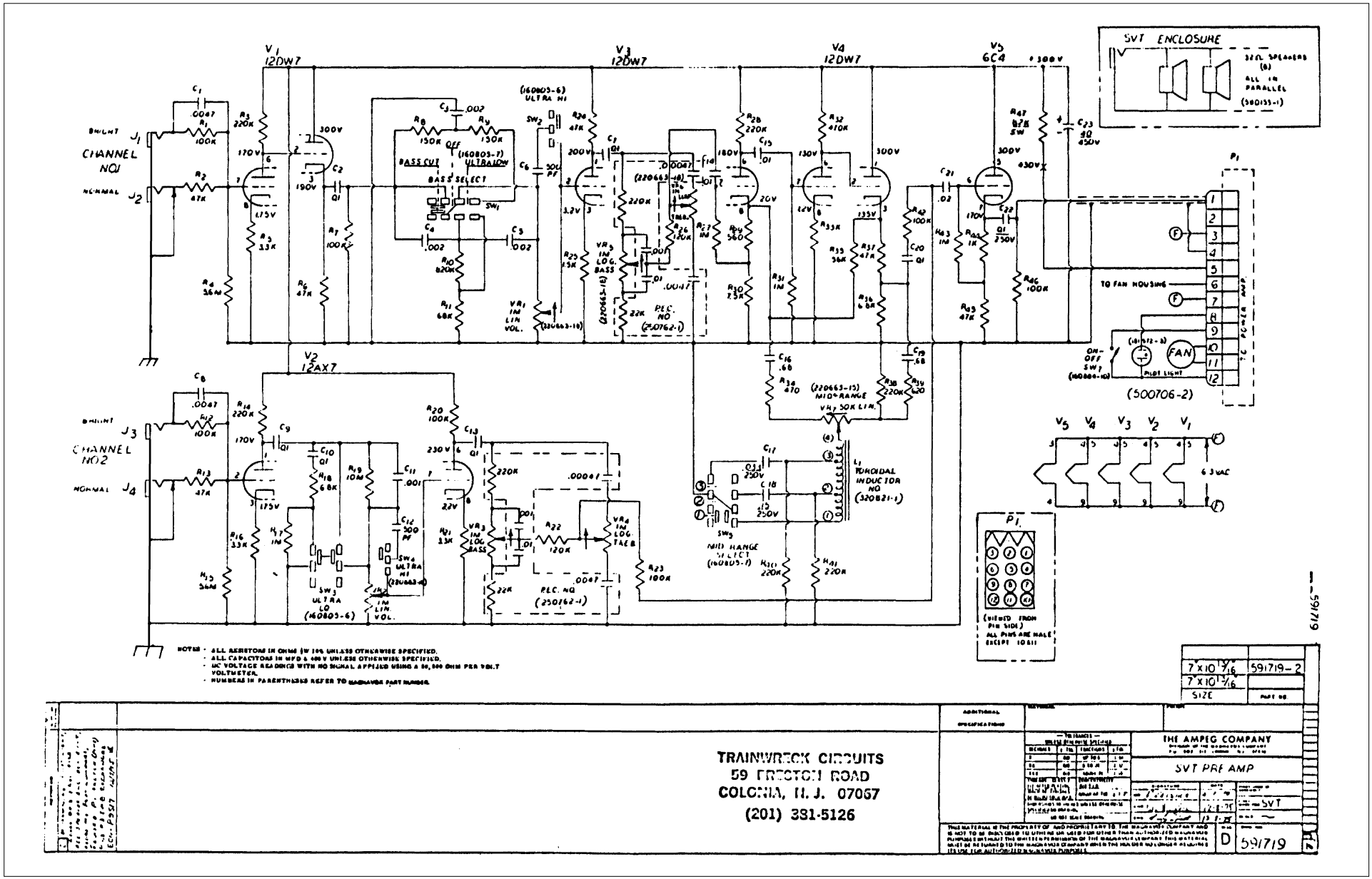

SVT **PREAMP (REV B)**

Ampeg

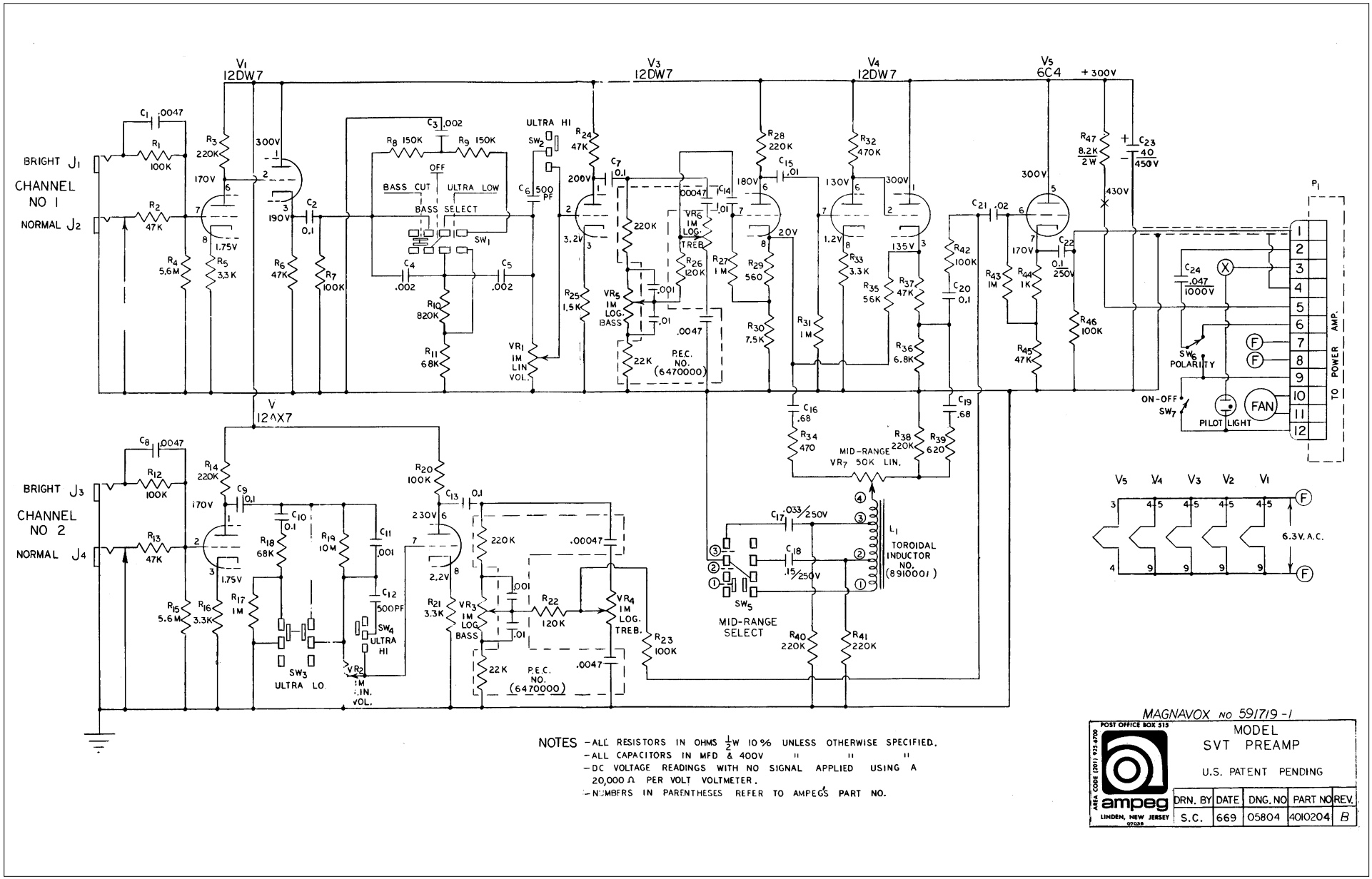

NOTES
- ALL RESISTORS IN OHMS ½W 10% UNLESS OTHERWISE SPECIFIED.
- ALL CAPACITORS IN MFD & 400V " " "
- DC VOLTAGE READINGS WITH NO SIGNAL APPLIED USING A 20,000 Ω PER VOLT VOLTMETER.
- NUMBERS IN PARENTHESES REFER TO AMPEG'S PART NO.

MAGNAVOX no 591719-1

MODEL
SVT PREAMP

U.S. PATENT PENDING

ampeg
LINDEN, NEW JERSEY 07036
POST OFFICE BOX 515
AREA CODE (201) 925-8700

DRN. BY	DATE	DNG. NO	PART NO	REV.
S.C.	669	05804	4010204	B

SVT **PREAMP (REV C)**

Ampeg

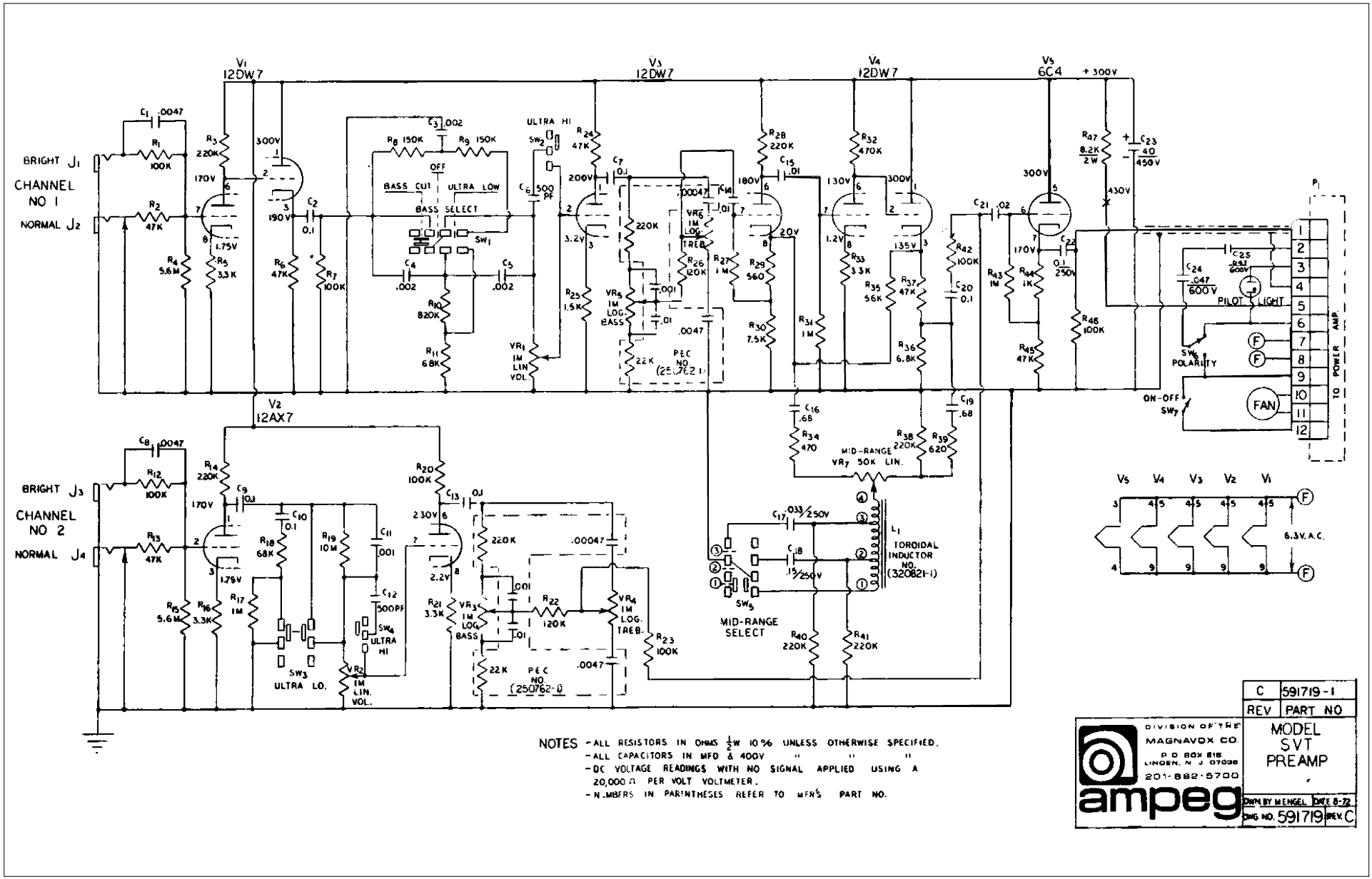

NOTES
- ALL RESISTORS IN OHMS ½W 10% UNLESS OTHERWISE SPECIFIED.
- ALL CAPACITORS IN MFD & 400V " " "
- DC VOLTAGE READINGS WITH NO SIGNAL APPLIED USING A 20,000 Ω PER VOLT VOLTMETER.
- NUMBERS IN PARENTHESES REFER TO MFR'S PART NO.

DIVISION OF THE MAGNAVOX CO.
P O BOX 615
LINDEN, N J 07036
201-882-5700
ampeg

REV	PART NO
C	591719-1

MODEL SVT PREAMP

DWN BY M ENGEL DATE 8-72
DWG NO. 591719 REV. C

SVT **MODEL 6146B**

Ampeg

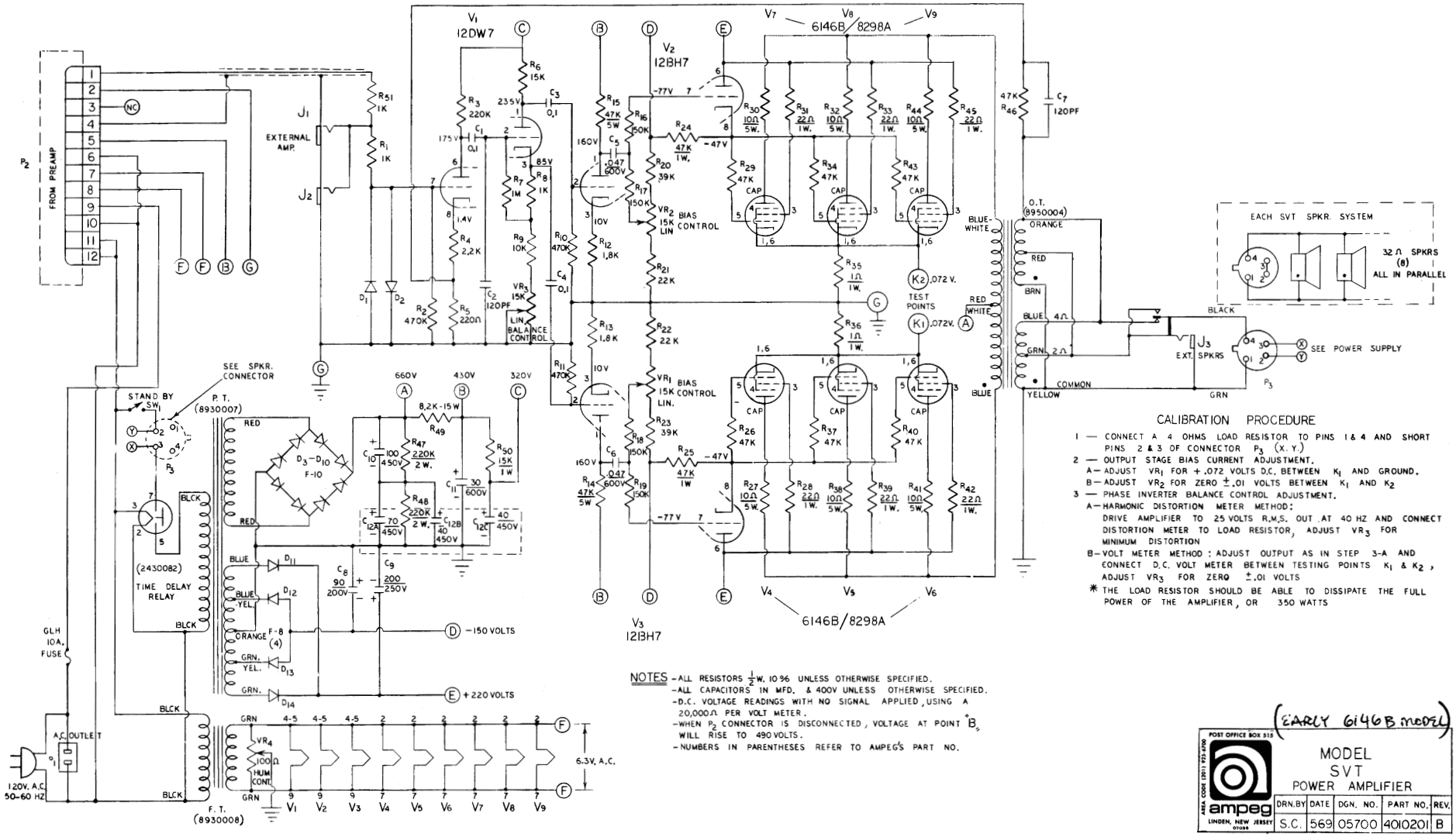

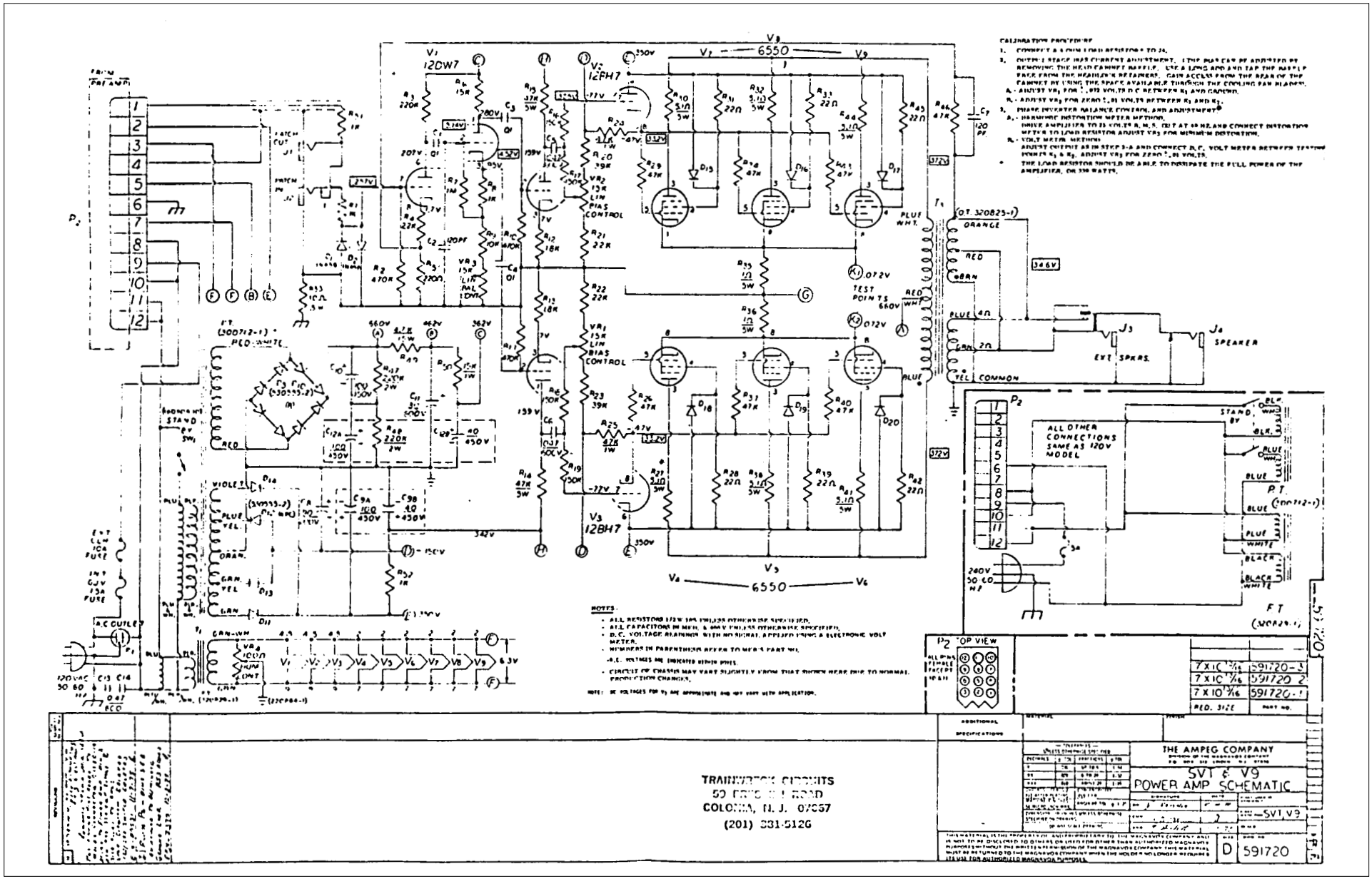
THE AMPEG COMPANY
SVT & V9
POWER AMP SCHEMATIC
591720
TRANSWITCH CIRCUITS
COLONIA, N.J. 07067
(201) 381-5126

SVT-2 **PWR PRE AMP (REV 7)**

Ampeg

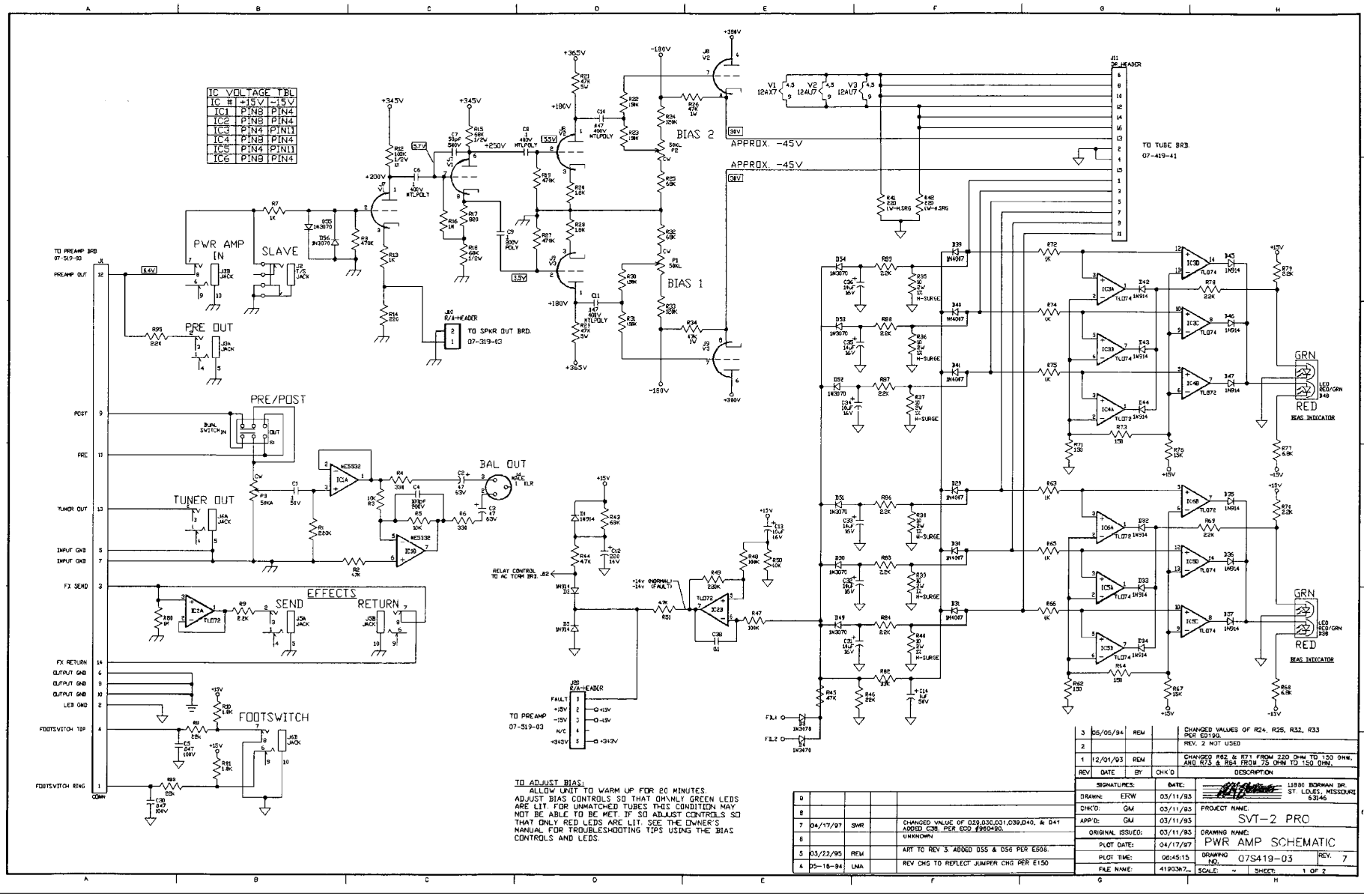

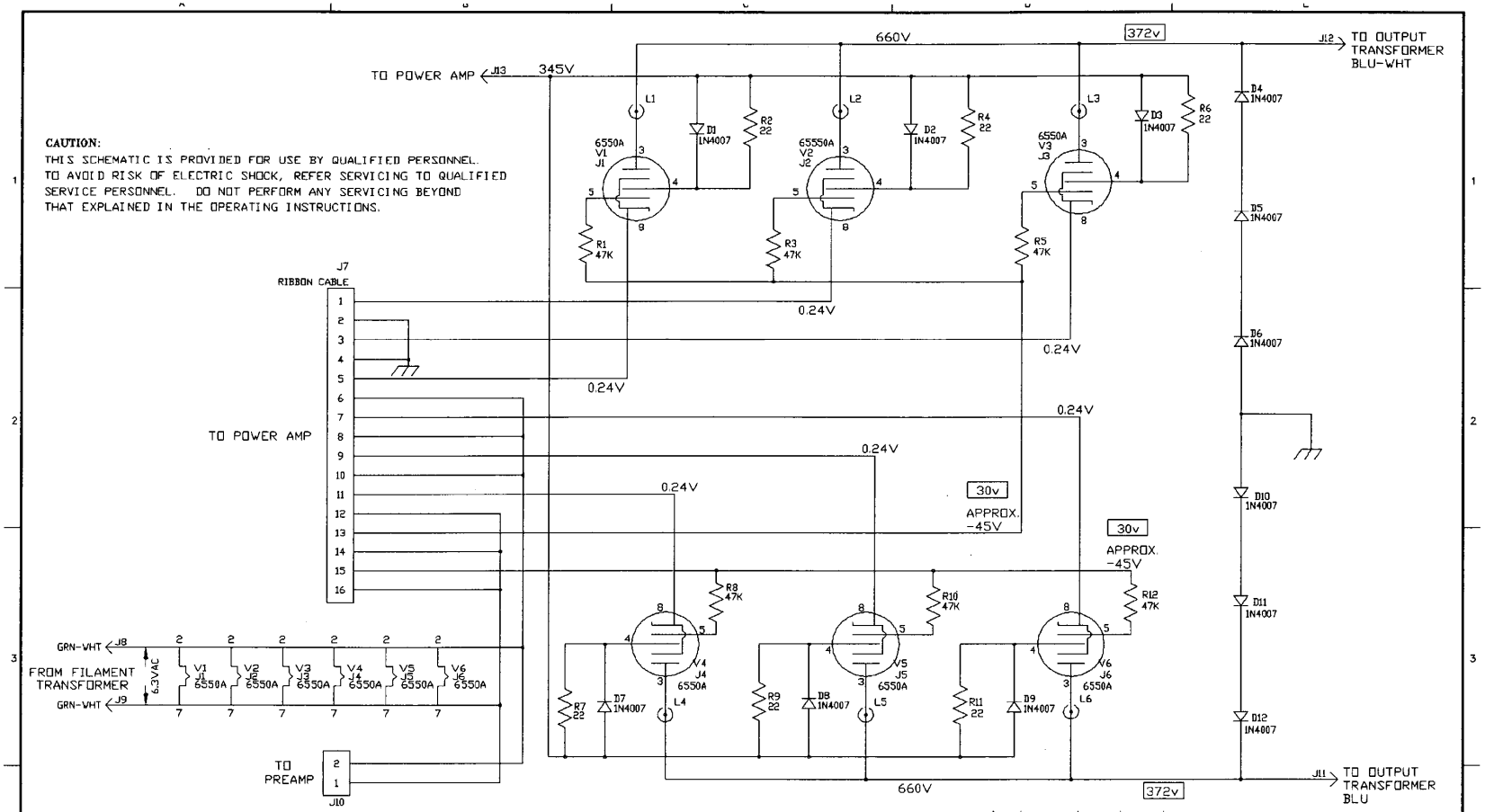

CAUTION:
THIS SCHEMATIC IS PROVIDED FOR USE BY QUALIFIED PERSONNEL.
TO AVOID RISK OF ELECTRIC SHOCK, REFER SERVICING TO QUALIFIED SERVICE PERSONNEL. DO NOT PERFORM ANY SERVICING BEYOND THAT EXPLAINED IN THE OPERATING INSTRUCTIONS.

NOTES

1) CAUTION: SHOCK HAZARD! THIS UNIT CONTAINS HAZARDOUS VOLTAGE. DISCONNECT POWER AND BE SURE POWER SUPPLY IS DISCHARGED BEFORE TOUCHING INTERNAL PARTS.
2) UNLESS NOTED, RESISTOR VALUES IN OHMS, 1/4W-5% TOL. CAPACITOR VALUES IN MICROFARADS, 50V-10% TOL.
3) VOLTAGES ARE MEASURED WITH 1 MEGOHM OSCILLOSCOPE AND 10 MEGOHM DIGITAL VOLTMETER. VOLTAGES IN RECTANGLES ARE RMS SIGNAL VOLTAGES WITH FULL POWER OUTPUT. OTHER VOLTAGES ARE DC WITH NO SIGNAL.

REV	DATE	BY	CHK'D	DESCRIPTION
3	08/30/96	LMA		UPDATED REV TO REFLECT P/C CHANGE E960333
2	05/16/94	LMA		REV CHG TO REFLECT JUMPER CHG PER E150
1				

SIGNATURES:		DATE:
DRAWN:	SWR	03/02/93
CHK'D:		
APP'D:		
ORIGINAL ISSUED:		
PLOT DATE:		09/03/96
PLOT TIME:		07:16:59
FILE NAME:		41941h3z

11880 BORMAN DR.
ST. LOUIS, MISSOURI
63146

PROJECT NAME: SVT-2 PRO

DRAWING NAME: TUBE Bd. SCHEMATIC

DRAWING NO. 07S419-41

SCALE: 1:1 SHEET: 1 OF 1 REV 3

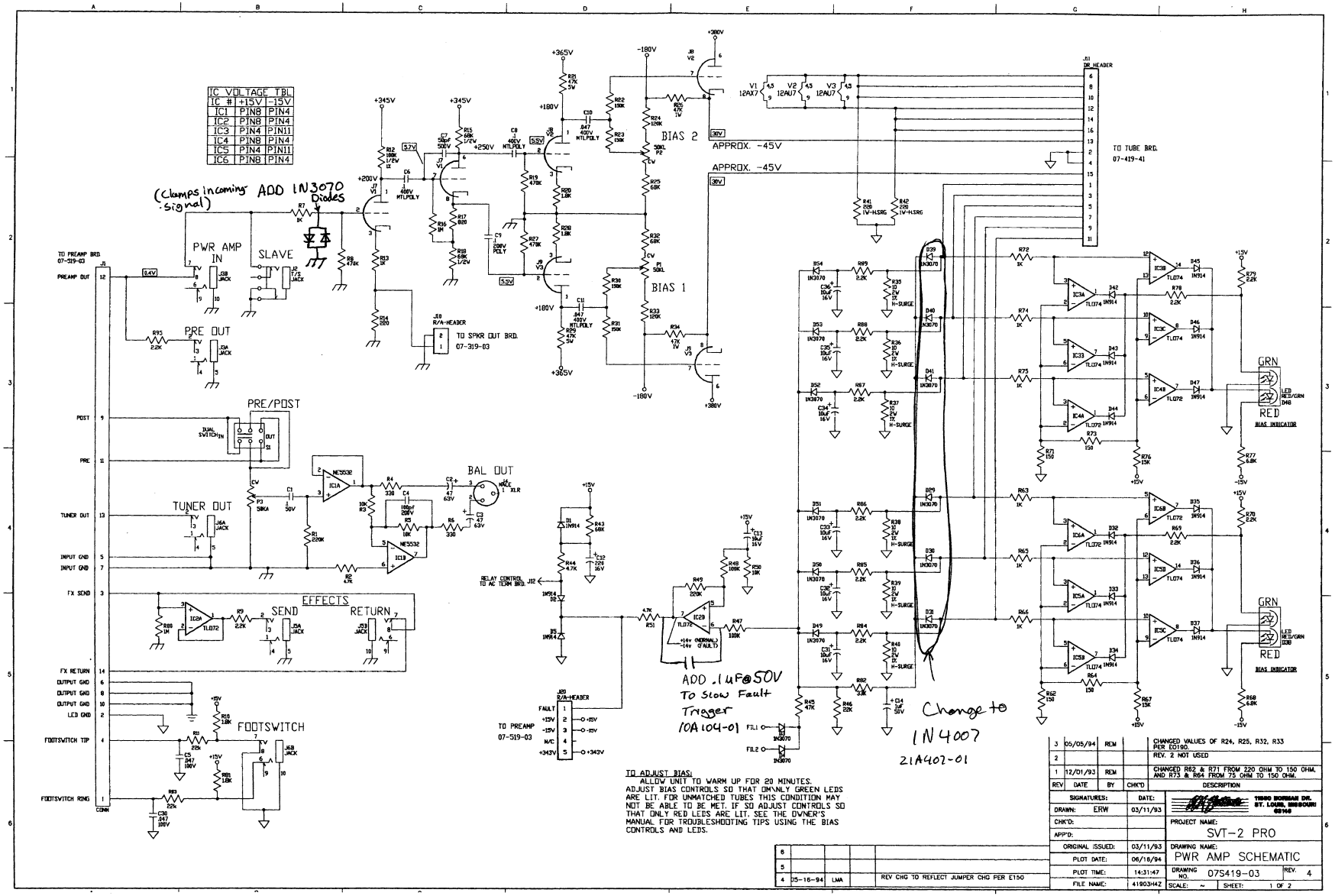
IC VOLTAGE TBL
IC # +15V -15V
IC1 PIN8 PIN4
IC2 PIN8 PIN4
IC3 PIN4 PIN11
IC4 PIN8 PIN4
IC5 PIN4 PIN11
IC6 PIN8 PIN4
(Clamps incoming signal)
ADD 1N3070 Diodes
PWR AMP IN
SLAVE
PRE OUT
PRE/POST
TUNER OUT
BAL OUT
EFFECTS
SEND
RETURN
FOOTSWITCH
BIAS 2
BIAS 1
APPROX. -45V
TO TUBE BRD. 07-419-41
TO SPKR OUT BRD. 07-319-03
TO PREAMP BRD. 07-319-03
TO PREAMP 07-519-03
RELAY CONTROL TO AC TERM BRD. J12
ADD .1uF@50V To Slow Fault Trigger 10A104-01
Change to 1N4007 21A407-01
GRN
RED
BIAS INDICATOR
TO ADJUST BIAS:
ALLOW UNIT TO WARM UP FOR 20 MINUTES.
ADJUST BIAS CONTROLS SO THAT ONLY GREEN LEDS ARE LIT. FOR UNMATCHED TUBES THIS CONDITION MAY NOT BE ABLE TO BE MET. IF SO ADJUST CONTROLS SO THAT ONLY RED LEDS ARE LIT. SEE THE OWNER'S MANUAL FOR TROUBLESHOOTING TIPS USING THE BIAS CONTROLS AND LEDS.
3 05/05/94 REM CHANGED VALUES OF R24, R25, R32, R33 PER EO190.
2 REV. 2 NOT USED
1 12/01/93 REM CHANGED R62 & R71 FROM 220 OHM TO 150 OHM, AND R73 & R64 FROM 75 OHM TO 150 OHM.
REV DATE BY CHK'D DESCRIPTION
4 05-16-94 LMA REV CHG TO REFLECT JUMPER CHG PER E150
SIGNATURES: DATE:
DRAWN: ERW 03/11/93
CHK'D:
APP'D:
ORIGINAL ISSUED: 03/11/93
PLOT DATE: 06/16/94
PLOT TIME: 14:31:47
FILE NAME: 41903H4Z
7800 BONHAM DR. ST. LOUIS, MISSOURI 63140
PROJECT NAME: SVT-2 PRO
DRAWING NAME: PWR AMP SCHEMATIC
DRAWING NO. 07S419-03 REV. 4
SCALE: ~ SHEET: 1 OF 2

SVT **PRO POWER AMP**

Ampeg

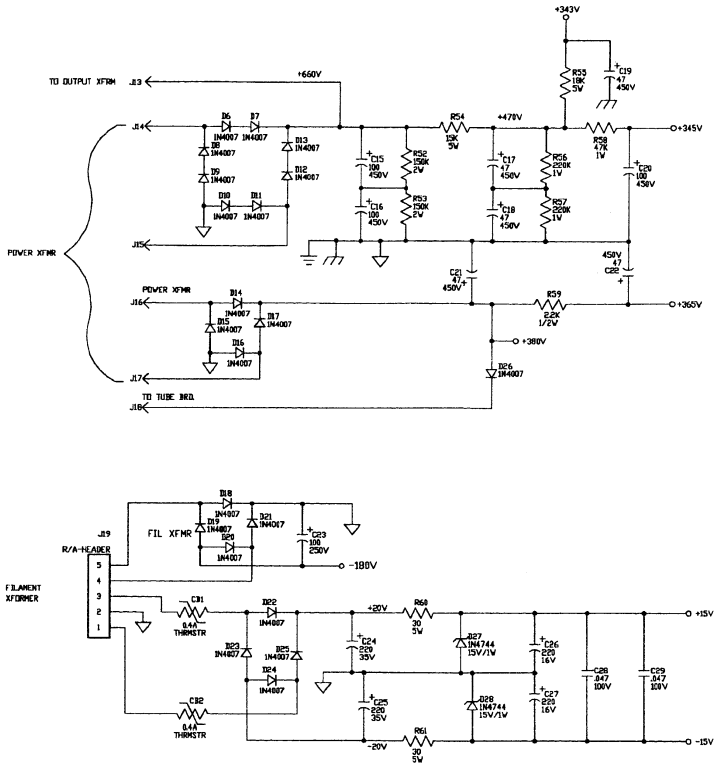

NOTES

1) CAUTION: SHOCK HAZARD!!
THIS UNIT CONTAINS HAZARDOUS VOLTAGE. DISCONNECT POWER AND BE SURE POWER SUPPLY IS DISCHARGED BEFORE TOUCHING INTERNAL PARTS.

2) UNLESS NOTED, RESISTOR VALUES IN OHMS, 1/4W-5% TOL. CAPACITOR VALUES IN MICROFARADS, 50V-10% TOL.

3) VOLTAGES ARE MEASURED WITH 1 MEGOHM OSCILLOSCOPE AND 10 MEGOHM DIGITAL VOLTMETER.

4) VOLTAGES IN RECTANGLES ARE RMS SIGNAL VOLTAGES WITH 0.4v IN. OTHER VOLTAGES ARE D.C. IN CONDITIONS STATED.

5) CIRCUIT GROUND ⏚ DIRTY GROUND ⏚ CHASSIS GROUND ⏚

REV	DATE	BY	CHK'D	DESCRIPTION
4	05/16/94	LMA		REV CHG TO REFLECT JUMPER CHG PER E150
3	05/05/94	REM		CHANGED VALUES OF R24, R25, R32, R33 PER E0190.
2				REV. 2 NOT USED
1	12/01/93	REM		CHANGED R62 & R71 FROM 220 OHM TO 150 OHM, AND R73 & R64 FROM 75 OHM TO 150 OHM.

SIGNATURES:		DATE:
DRAWN:	ERW	03/11/93
CHK'D:	GM	03/11/93
APP'D:	GM	03/11/93
ORIGINAL ISSUED:		03/11/93
PLOT DATE:		06/18/94
PLOT TIME:		14:31:47
FILE NAME:		D:\419\419030

1890 BORMAN DR.
ST. LOUIS, MISSOURI
63146

PROJECT NAME: SVT-2 PRO

DRAWING NAME: PWR AMP SCHEMATIC

DRAWING NO. 07S419-03 REV. 4

SCALE: ~ SHEET: 2 OF 2

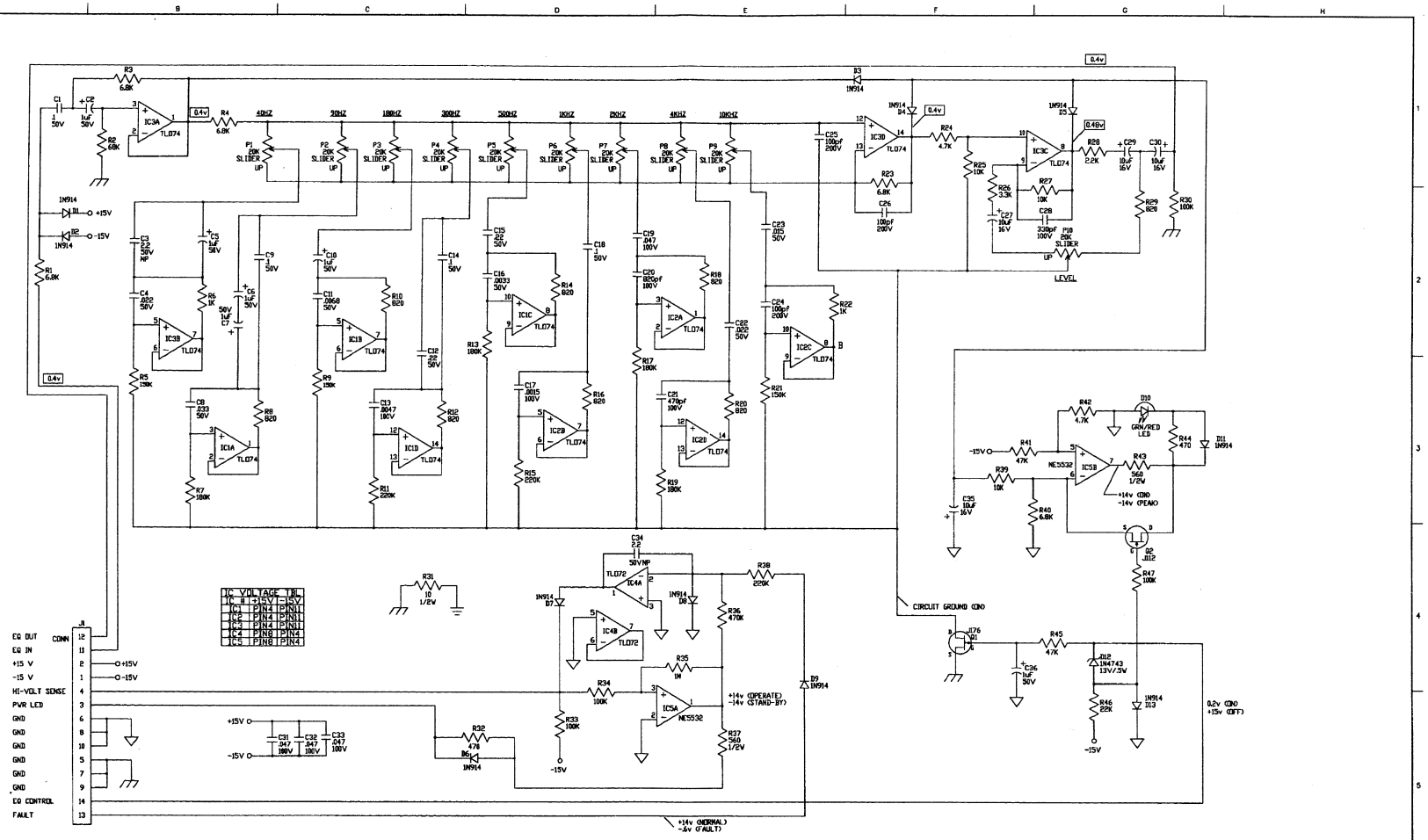

IC #	+15V	-15V
(C)	PIN4	PIN11
IC2	PIN4	PIN11
IC3	PIN4	PIN11
IC4	PIN8	PIN4
IC5	PIN8	PIN4

NOTES

1) CAUTION: SHOCK HAZARD!!
THIS UNIT CONTAINS HAZARDOUS VOLTAGE. DISCONNECT POWER AND BE SURE POWER SUPPLY IS DISCHARGED BEFORE TOUCHING INTERNAL PARTS.
2) UNLESS NOTED, RESISTOR VALUES IN OHMS, 1/4W-5% TOL. CAPACITOR VALUES IN MICROFARADS, 50V-10% TOL.
3) VOLTAGES ARE MEASURED WITH 1 MEGOHM OSCILLOSCOPE AND 10 MEGOHM DIGITAL VOLTMETER. EQ. ON, SLIDERS ARE IN CENTER POSITION.
4) VOLTAGES IN RECTANGLES ARE RMS SIGNAL VOLTAGES WITH 0.4v IN. OTHER VOLTAGES ARE D.C. IN CONDITIONS STATED.
5) CIRCUIT GROUND ⏚ DIRTY GROUND ⏚ CHASSIS GROUND ⏚

REV	DATE	BY	CHK'D	DESCRIPTION
3				
2	05/25/94	LMA		REV CHG TO REFLECT JUMPER CHG PER E150
1				

SIGNATURES:		DATE:
DRAWN:	ERW	3/11/93
CHK'D:		
APP'D:		
ORIGINAL ISSUED:		
PLOT DATE:		05/25/94
PLOT TIME:		13:46:19
FILE NAME:		72802H22

1200 DORMAN DR.
ST. LOUIS, MISSOURI
63146

PROJECT NAME: SVT-2 PRO

DRAWING NAME: GRAPHIC EQ. SCHEMATIC

DRAWING NO. 07S728-02 REV. 2

SCALE: 1:1 SHEET: 1 OF 1

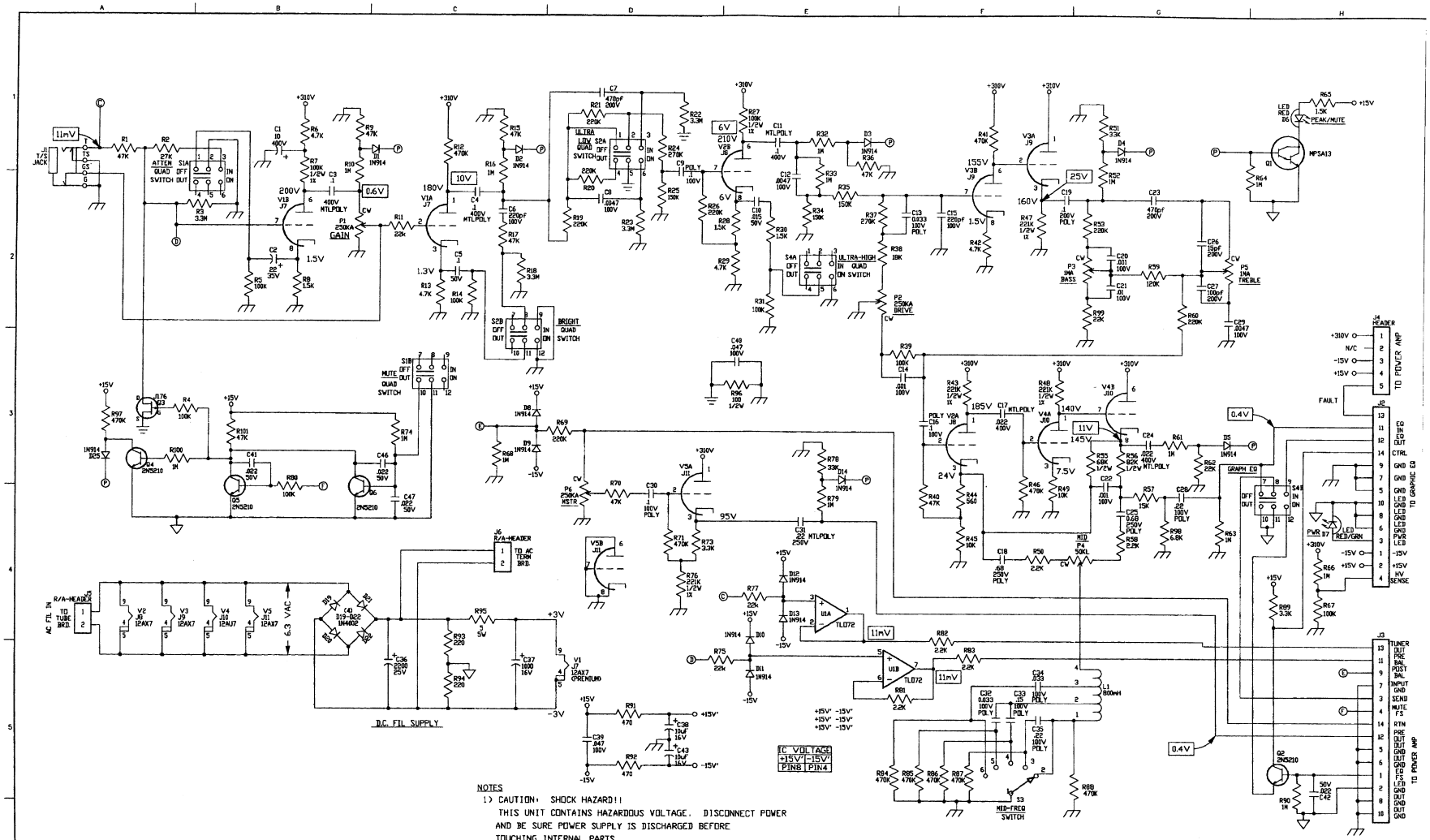
PRE AMP SCHEMATIC
SVT-2 PRO
07S519-03
REV. 3
SCALE: 1:1
SHEET: 1 OF 1
PLOT DATE: 05/18/94
PLOT TIME: 09:42:37
FILE NAME: 51903H3Z
DRAWN: ERW 3/30/93
ORIGINAL ISSUED:
TO POWER AMP
TO GRAPHIC EQ
TO POWER AMP
D.C. FIL SUPPLY
AC FIL IN
6.3 VAC
GAIN
BRIGHT QUAD SWITCH
ULTRA-HIGH IN QUAD ON SWITCH
MID-FREQ SWITCH
GRAPH EQ
PEAK/MUTE
FAULT
DC VOLTAGE
+15V' -15V'
PIN8 PIN4
NOTES
1) CAUTION: SHOCK HAZARD!!
THIS UNIT CONTAINS HAZARDOUS VOLTAGE. DISCONNECT POWER AND BE SURE POWER SUPPLY IS DISCHARGED BEFORE TOUCHING INTERNAL PARTS.
2) UNLESS NOTED, RESISTOR VALUES IN OHMS, 1/4W-5% TOL. CAPACITOR VALUES IN MICROFARADS, 50V-10% TOL.
3) VOLTAGES ARE MEASURED WITH 1 MEGOHM OSCILLOSCOPE AND 10 MEGOHM DIGITAL VOLTMETER.
4) VOLTAGES IN RECTANGLES ARE RMS SIGNAL VOLTAGES. OTHER VOLTAGES ARE D.C. IN CONDITIONS STATED.
5) CIRCUIT GROUND DIRTY GROUND CHASSIS GROUND
REV DATE BY CHK'D DESCRIPTION
3 06/18/94 LMA REV CHG TO REFLECT JUMPER CHG PER E150

MODEL V4/VT22 SCHEMATIC DIAGRAM (REV. G)

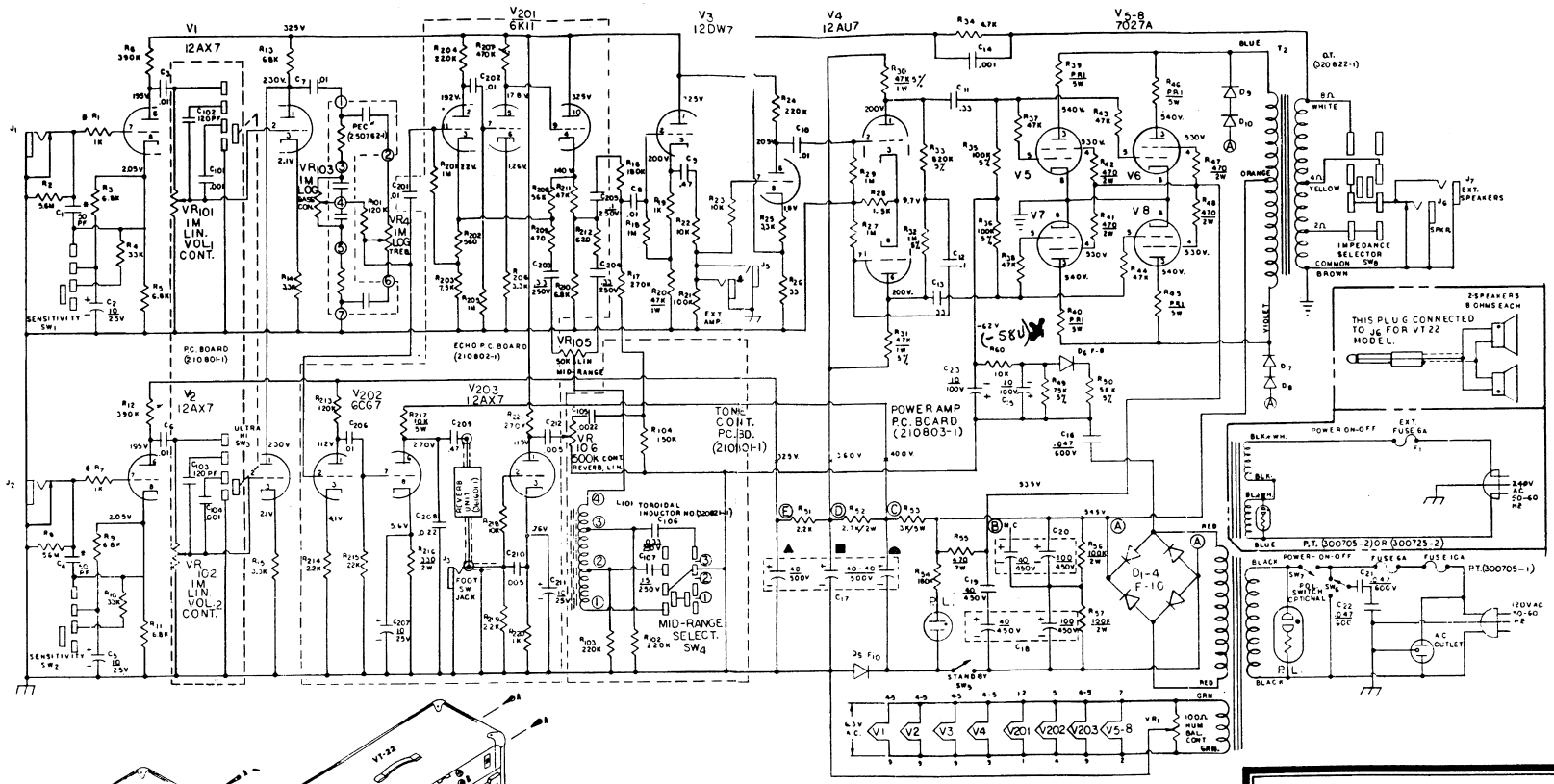

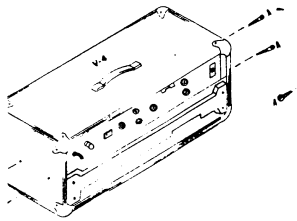

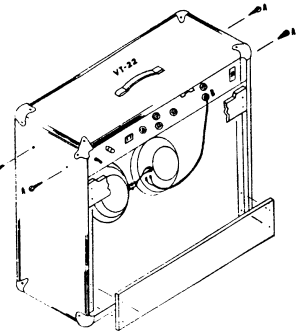

MECHANICAL DISASSEMBLY

To remove amplifier chassis from cabinet for servicing — unfasten the four screws marked "A" and extract the chassis from the rear of the cabinet.

To remove amplifier chassis from cabinet for servicing — unfasten the four screws marked "A" and unplug speaker cable from jack "B" as shown. Then extract the chassis from the rear of the cabinet.

NOTES: UNLESS OTHERWISE SPECIFIED

1. Capacitance values are in microfarads, 10%, 400V.
2. Resistors are ½W, 10%, composition.
3. DC voltages taken with no signal applied using a 20,000 ohm/volt voltmeter.
4. DC voltages are positive with respect to chassis ground.
5. * R1, R7, C1, C4 will not appear in some units.
6. Actual circuit may vary slightly due to normal production changes.
7. If transformer 300725-1 is used no connection is required for Violet / Orange, Green / Yellow, and Blue / Yellow leads.

*When using 6550 outputs reset bias to -58V

WARNING

For maximum safety, reliability and performance, all parts must be replaced by those having identical specifications.

Under no circumstances may the original design be modified or altered without permission from the Ampeg Company.

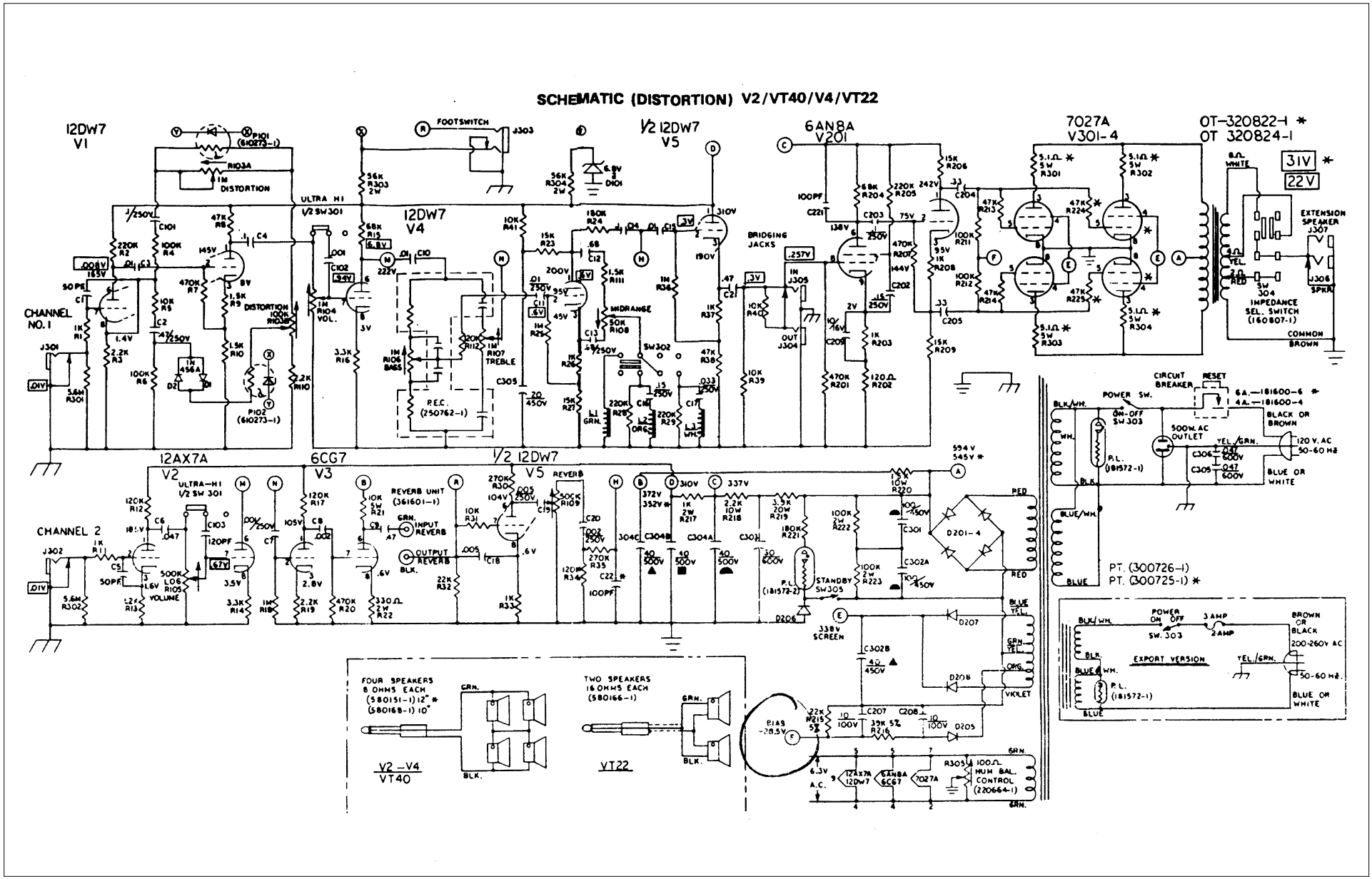
SCHEMATIC (DISTORTION) V2/VT40/V4/VT22
12DW7 V1
CHANNEL NO. 1
DISTORTION
ULTRA HI
FOOTSWITCH
12DW7 V4
P.E.C. (250762-1)
MIDRANGE
TREBLE
BASS
VOL.
1/2 12DW7 V5
6AN8A V201
BRIDGING JACKS
7027A V301-4
OT-320822-1 *
OT 320824-1
31V *
22V
EXTENSION SPEAKER J307
IMPEDANCE SEL. SWITCH (160807-1)
COMMON BROWN
12AX7A V2
CHANNEL 2
VOLUME
6CG7 V3
REVERB UNIT (361601-1)
INPUT REVERB
OUTPUT REVERB
1/2 12DW7 V5
STANDBY SW305
338V SCREEN
D201-4
CIRCUIT BREAKER
RESET
POWER SW.
ON-OFF SW303
500W. AC OUTLET
120 V. AC 50-60 HZ
BLACK OR BROWN
BLUE OR WHITE
PT. (300726-1)
PT. (300725-1) *
POWER ON OFF SW. 303
3 AMP
2 AMP
EXPORT VERSION
200-260V AC
50-60 HZ.
FOUR SPEAKERS 8 OHMS EACH (580151-1) 12" * (580168-1) 10"
TWO SPEAKERS 16 OHMS EACH (580166-1)
V2 – V4 VT40
VT22
BIAS -28.5V
HUM BAL. CONTROL (220664-1)

V2 **(REV B)**

Ampeg

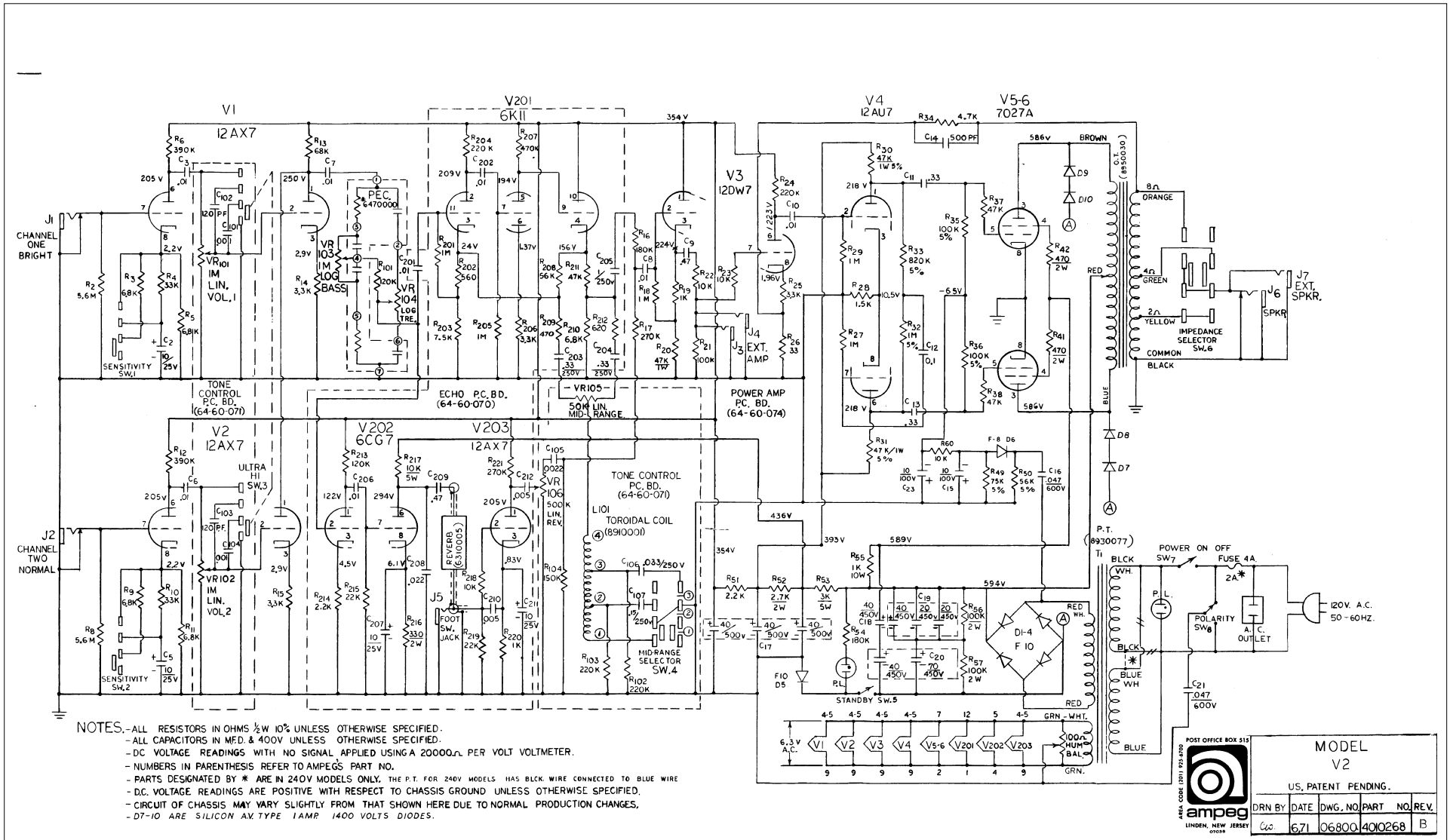

NOTES.- ALL RESISTORS IN OHMS ½W 10% UNLESS OTHERWISE SPECIFIED.
- ALL CAPACITORS IN MFD. & 400V UNLESS OTHERWISE SPECIFIED.
- DC VOLTAGE READINGS WITH NO SIGNAL APPLIED USING A 20000Ω PER VOLT VOLTMETER.
- NUMBERS IN PARENTHESIS REFER TO AMPEG'S PART NO.
- PARTS DESIGNATED BY * ARE IN 240V MODELS ONLY. THE P.T. FOR 240V MODELS HAS BLCK. WIRE CONNECTED TO BLUE WIRE
- D.C. VOLTAGE READINGS ARE POSITIVE WITH RESPECT TO CHASSIS GROUND UNLESS OTHERWISE SPECIFIED.
- CIRCUIT OF CHASSIS MAY VARY SLIGHTLY FROM THAT SHOWN HERE DUE TO NORMAL PRODUCTION CHANGES.
- D7-10 ARE SILICON A.V. TYPE 1AMP 1400 VOLTS DIODES.

POST OFFICE BOX 515
AREA CODE (201) 925-6700
ampeg
LINDEN, NEW JERSEY 07036

MODEL
V2

US. PATENT PENDING.

DRN BY	DATE	DWG. NO.	PART NO.	REV.
Co.	6,71	06800	4010268	B

V2/V4/VT22/VT40 **(REV D)**

Ampeg

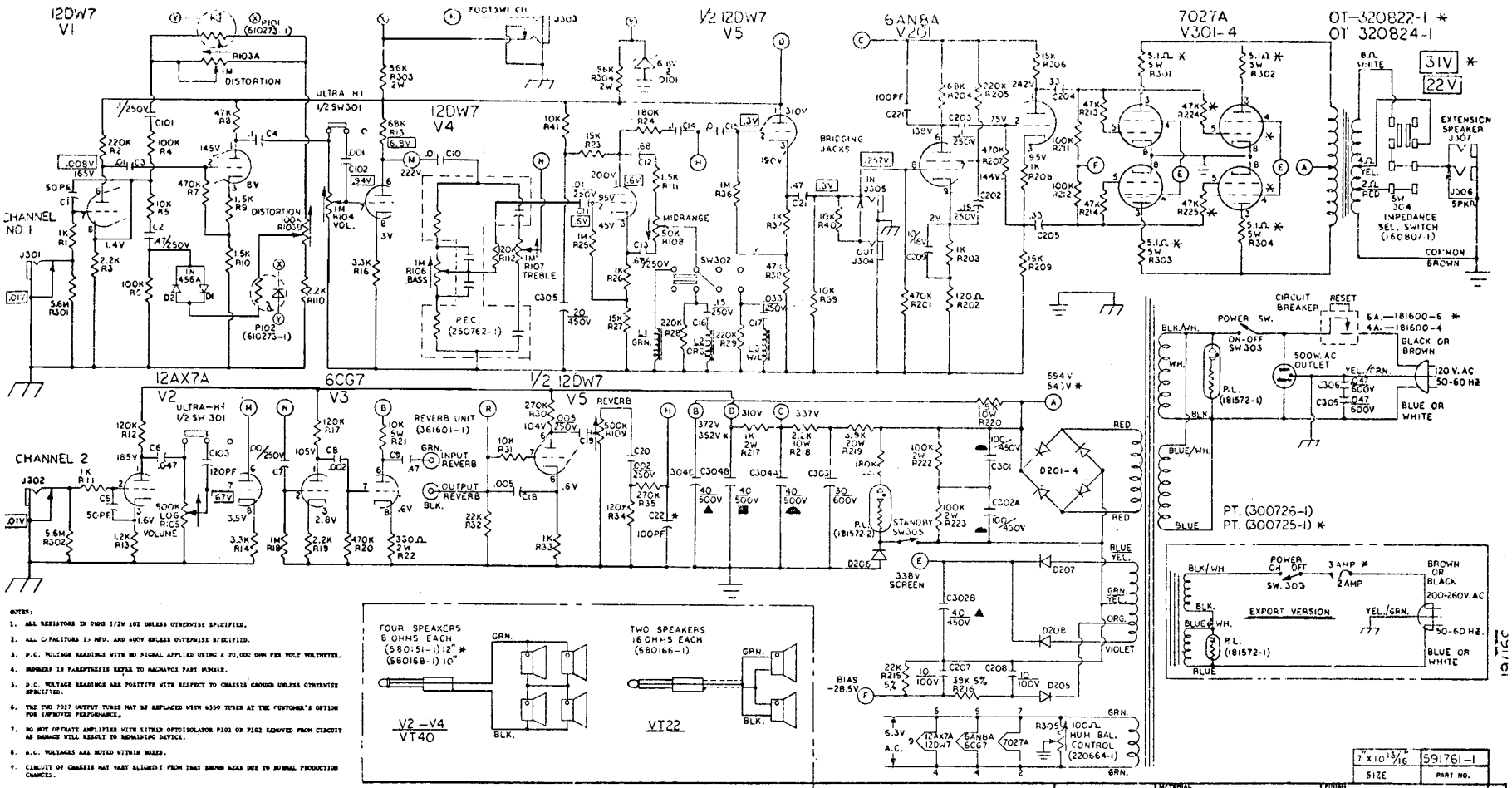

SCHEMATIC (DISTORTION) V2/VT40/V4/VT22

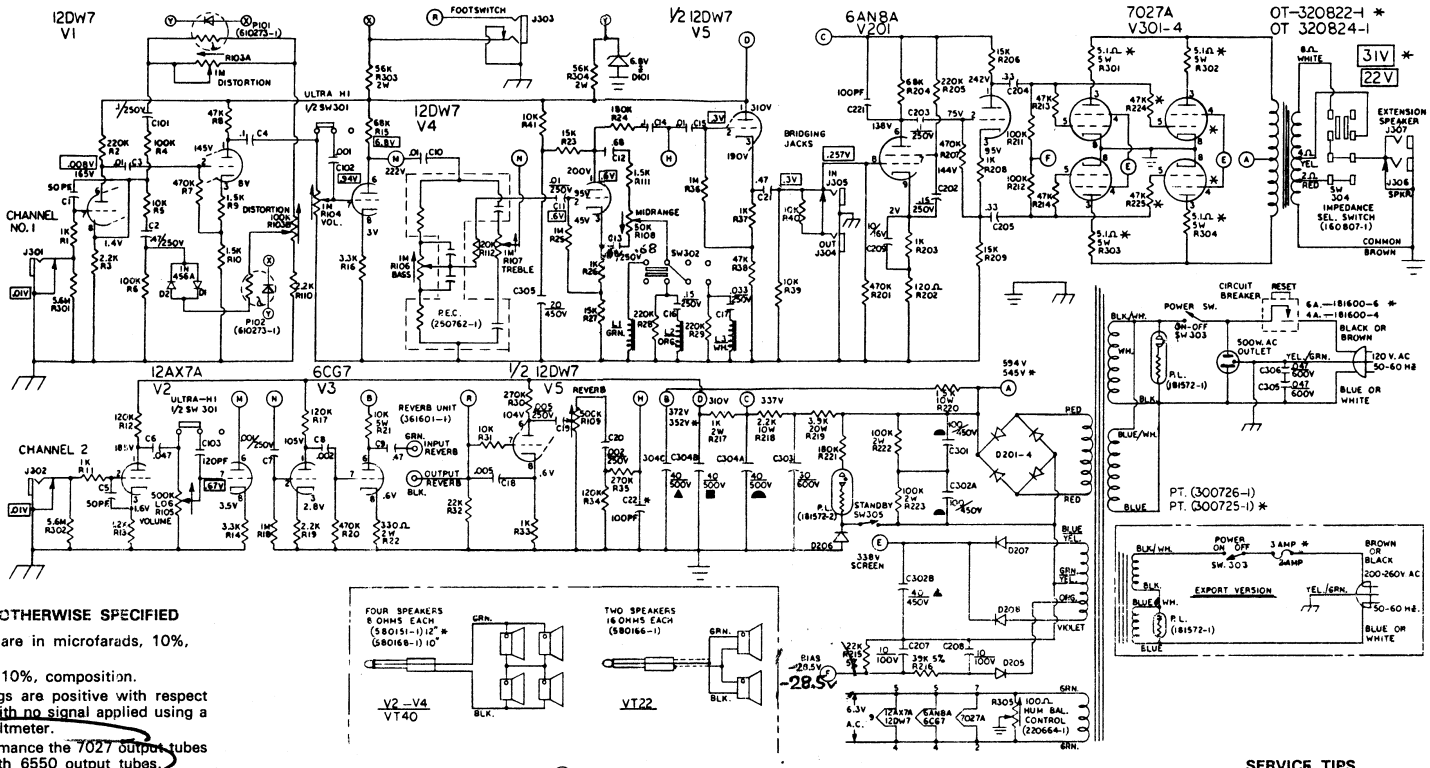

NOTES — UNLESS OTHERWISE SPECIFIED

1. Capacitance values are in microfarads, 10%, 400V.
2. Resistors are ½W, 10%, composition.
3. D.C. voltage readings are positive with respect to chassis ground with no signal applied using a 20,000 ohm/volt voltmeter.
4. For improved performance the 7027 output tubes can be replaced with 6550 output tubes.
5. Do not operate amplifier with either optoisolator P101 or P102 removed from circuit as damage will result to remaining device.
6. Typical AC voltages are shown in boxes.
*7. Parts indicated with asterisk are used on V4 and VT22 models only.
8. Actual circuit may vary slightly due to normal production changes.

WARNING

For maximum safety, reliability and performance, all parts must be replaced by those having identical specifications.

Under no circumstances may the original design be modified or altered without permission from the Ampeg Company.

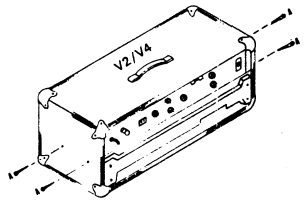

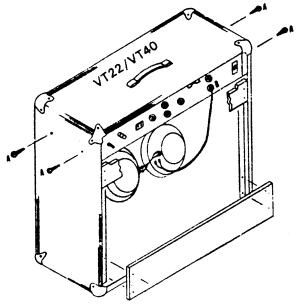

DISASSEMBLY INSTRUCTIONS:

V2/V4: To remove amplifier chassis from cabinet for servicing — unfasten the four screws marked "A" and extract the chassis from the rear of the cabinet.

VT22/VT40: To remove amplifier chassis from cabinet for servicing — unfasten the four screws marked "A" and unplug speaker cable from jack "B" as shown. Then extract the chassis from the rear of the cabinet.

SERVICE TIPS

SYMPTOM	• POSSIBLE CAUSE
Hum	0.47 MFD capacitors at the screen supply.
	Improper phasing of filament wires connected to the preamp P.C. board.
	Improper shielding of wire connecting the ultra hi switch to the tone P.C. board.
	Placement of ground wire connecting C302 to the power P.C. board.
	Placement of wires connecting the reverb control to the preamp P.C. board.
	Reverb cables improperly wired or reversed.
Oscillation	Change R7 to 47K resistor.
	Change R32 to 4.7K resistor.
	Change C103 to 220 pf capacitor.
	Change C102 to 120 pf capacitor.
	Placement of output transformer leads.
	In channel 1 only, tube shield on VI not fully extended or improperly grounded.
	Lack of shielding between the input and output tubes.

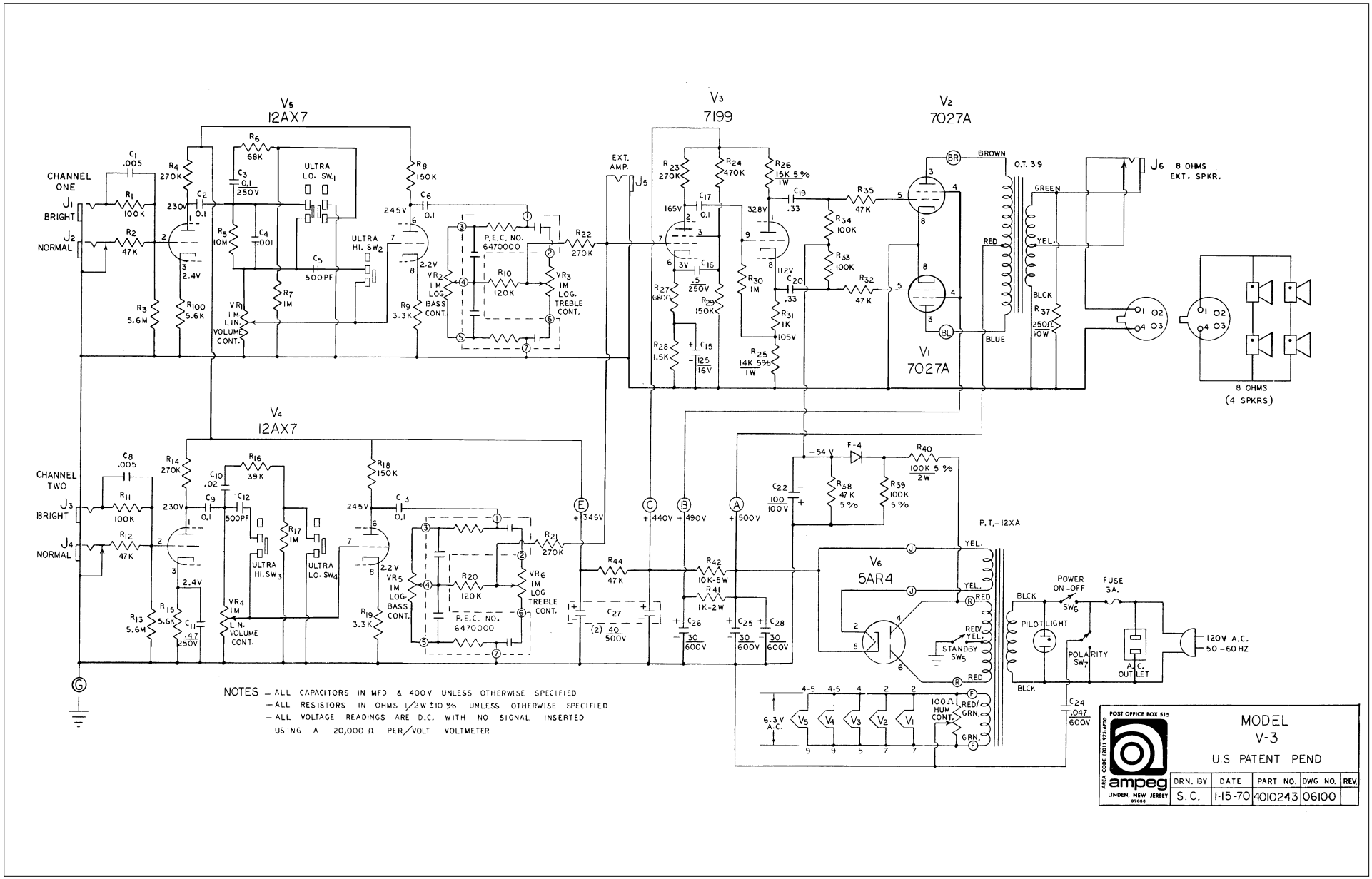
V5
12AX7
V3
7199
V2
7027A
V1
7027A
V4
12AX7
V6
5AR4
CHANNEL ONE
J1 BRIGHT
J2 NORMAL
CHANNEL TWO
J3 BRIGHT
J4 NORMAL
ULTRA LO. SW1
ULTRA HI. SW2
ULTRA HI. SW3
ULTRA LO. SW4
P.E.C. NO. 6470000
VR1 1M LIN. VOLUME CONT.
VR2 1M LOG BASS CONT.
VR3 1M LOG. TREBLE CONT.
VR4 1M LIN. VOLUME CONT.
VR5 1M LOG. BASS CONT.
VR6 1M LOG TREBLE CONT.
EXT. AMP.
J5
J6 8 OHMS EXT. SPKR.
O.T. 319
8 OHMS (4 SPKRS)
P.T.-12XA
POWER ON-OFF SW6
FUSE 3A.
PILOT LIGHT
POLARITY SW7
A.C. OUTLET
120V A.C. 50-60 HZ
STANDBY SW5
100Ω HUM CONT.
6.3V A.C.
NOTES – ALL CAPACITORS IN MFD & 400V UNLESS OTHERWISE SPECIFIED
– ALL RESISTORS IN OHMS 1/2W ±10 % UNLESS OTHERWISE SPECIFIED
– ALL VOLTAGE READINGS ARE D.C. WITH NO SIGNAL INSERTED
USING A 20,000 Ω PER/VOLT VOLTMETER
POST OFFICE BOX 515
AREA CODE (201) 925-8200
ampeg
LINDEN, NEW JERSEY 07036
MODEL
V-3
U.S PATENT PEND
DRN. BY S.C.
DATE 1-15-70
PART NO. 4010243
DWG NO. 06100
REV.

V4 PREAMP & POWER AMP

Ampeg

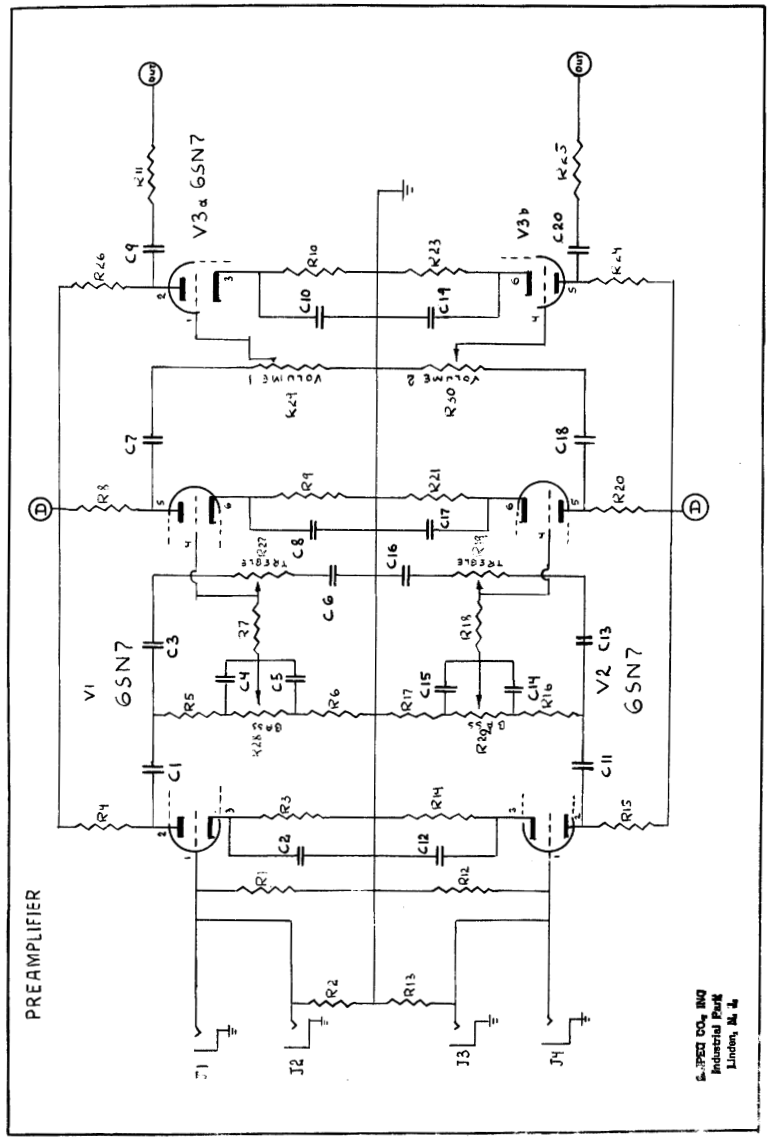

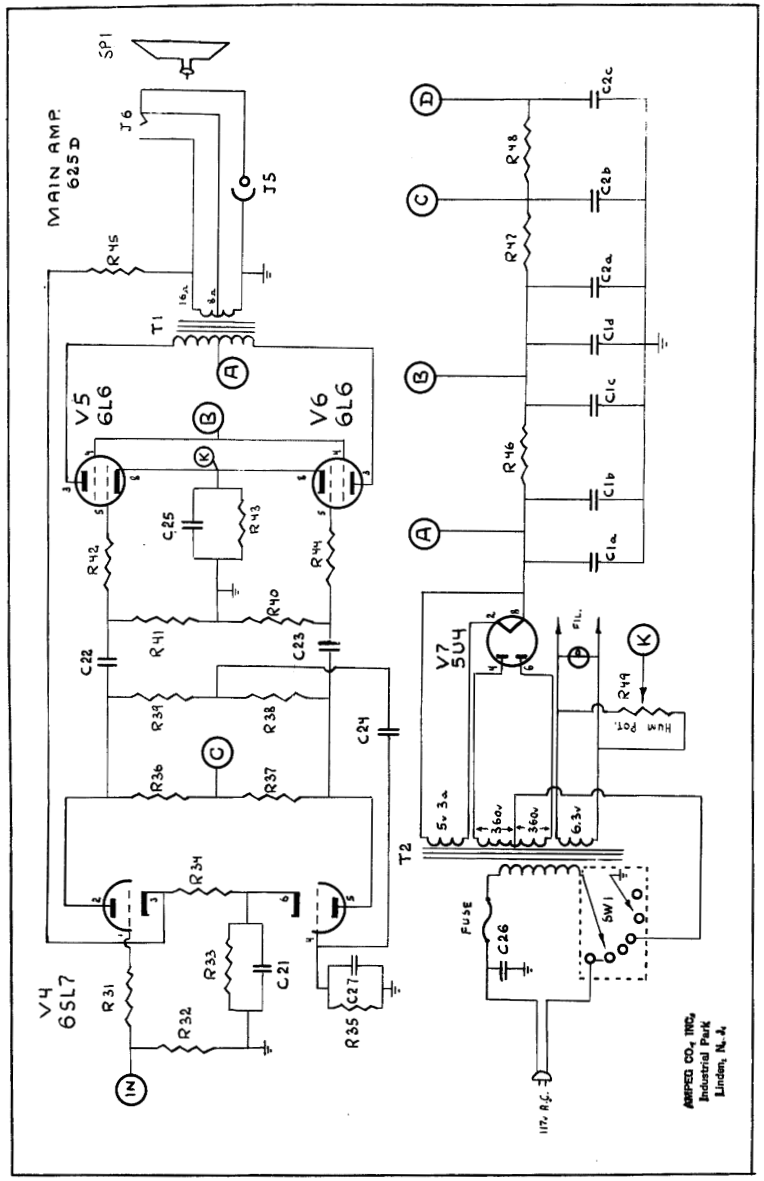

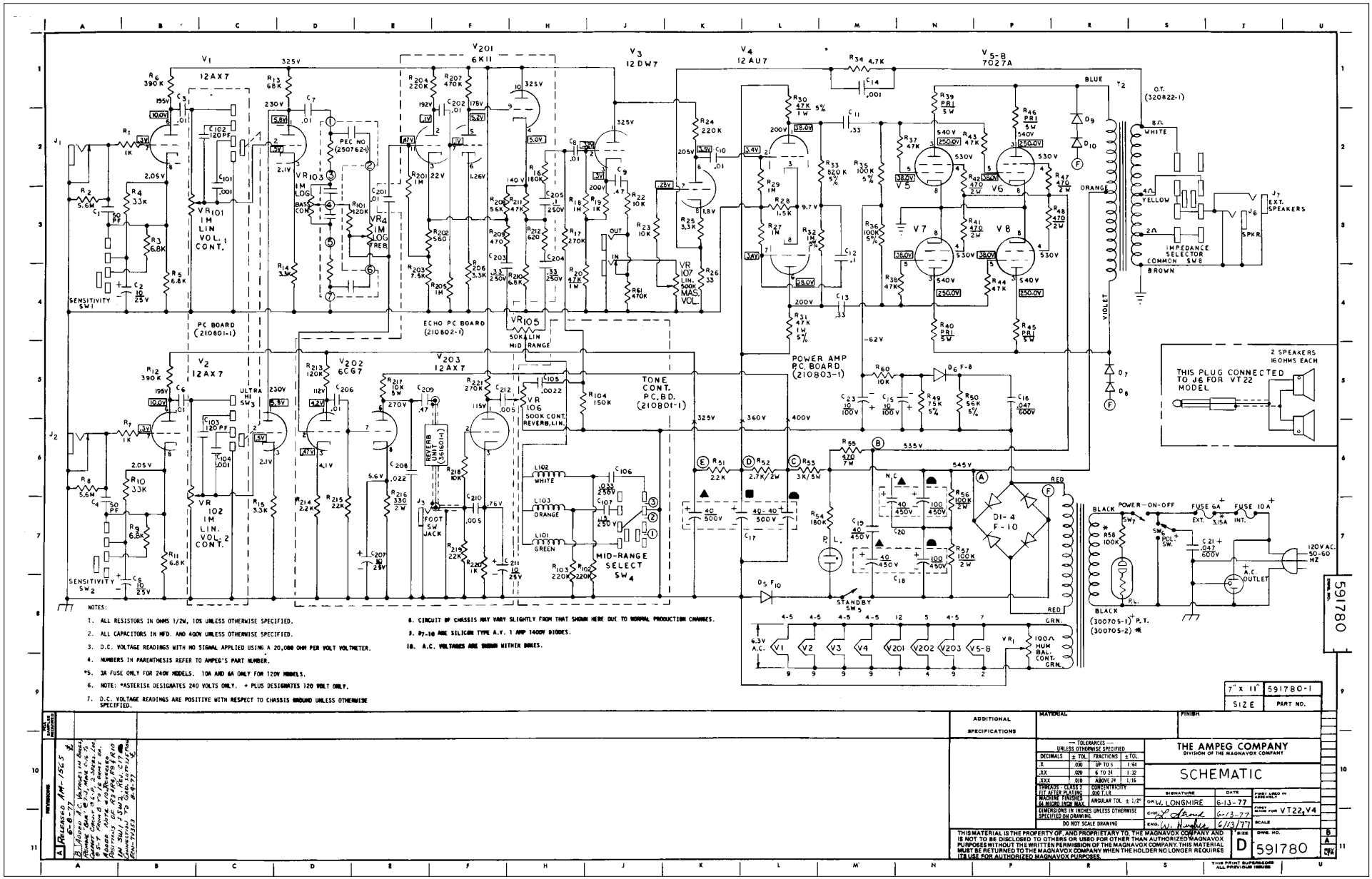

NOTES:

1. ALL RESISTORS IN OHMS 1/2W, 10% UNLESS OTHERWISE SPECIFIED.
2. ALL CAPACITORS IN MFD. AND 400V UNLESS OTHERWISE SPECIFIED.
3. D.C. VOLTAGE READINGS WITH NO SIGNAL APPLIED USING A 20,000 OHM PER VOLT VOLTMETER.
4. NUMBERS IN PARENTHESIS REFER TO AMPEG'S PART NUMBER.
*5. 3A FUSE ONLY FOR 240V MODELS. 10A AND 6A ONLY FOR 120V MODELS.
6. NOTE: *ASTERISK DESIGNATES 240 VOLTS ONLY. + PLUS DESIGNATES 120 VOLT ONLY.
7. D.C. VOLTAGE READINGS ARE POSITIVE WITH RESPECT TO CHASSIS GROUND UNLESS OTHERWISE SPECIFIED.
8. CIRCUIT OF CHASSIS MAY VARY SLIGHTLY FROM THAT SHOWN HERE DUE TO NORMAL PRODUCTION CHANGES.
9. D7-10 ARE SILICON TYPE A.V. 1 AMP 1400V DIODES.
10. A.C. VOLTAGES ARE SHOWN WITHIN BOXES.

SIZE	PART NO.
7" x 11"	591780-1

REVISIONS	
A	RELEASED AM-1965 6-8-77
B	ADDED A.C. VARIAGES IN BOXES. CHANGE CONN. OF C.T. TO PIN 2 OF V5-8. CHANGE R.C. VALUES TO 8.5-7 FROM 8 TO 16 OHMS ON. ADDED NOTE 10 REVISED NOTE 8 ADDED NOTE 9 ADDED NOTE 10 ADDED R1 ON SW1, SW2, R14, C17 CONNECTED TO GND. ON PIN 4 OF CONNECTOR J3 6-13-77

ADDITIONAL SPECIFICATIONS

MATERIAL

FINISH

— TOLERANCES — UNLESS OTHERWISE SPECIFIED

DECIMALS	± TOL.	FRACTIONS	± TOL.
.X	.030	UP TO 6	1/64
.XX	.020	6 TO 24	1/32
.XXX	.010	ABOVE 24	1/16

THREADS - CLASS 2 FIT AFTER PLATING
MACHINE FINISHES 64 MICRO INCH MAX.
CONCENTRICITY .010 T.I.R.
ANGULAR TOL. ± 1/2°
DIMENSIONS IN INCHES UNLESS OTHERWISE SPECIFIED ON DRAWING.
DO NOT SCALE DRAWING

THE AMPEG COMPANY
DIVISION OF THE MAGNAVOX COMPANY

SCHEMATIC

	SIGNATURE	DATE
DR. W. LONGMIRE		6-13-77
CHK.		6-13-77
ENG.		6/13/77

FIRST USED IN ASSEMBLY
FIRST USED FOR VT22, V4
SCALE

SIZE D — DWG. NO. 591780 — REV. B

THIS MATERIAL IS THE PROPERTY OF, AND PROPRIETARY TO, THE MAGNAVOX COMPANY AND IS NOT TO BE DISCLOSED TO OTHERS OR USED FOR OTHER THAN AUTHORIZED MAGNAVOX PURPOSES WITHOUT THE WRITTEN PERMISSION OF THE MAGNAVOX COMPANY. THIS MATERIAL MUST BE RETURNED TO THE MAGNAVOX COMPANY WHEN THE HOLDER NO LONGER REQUIRES IT FOR USE FOR AUTHORIZED MAGNAVOX PURPOSES.

THIS PRINT SUPERSEDES ALL PREVIOUS ISSUES

VT22 & V4 **(REV A)**

Ampeg

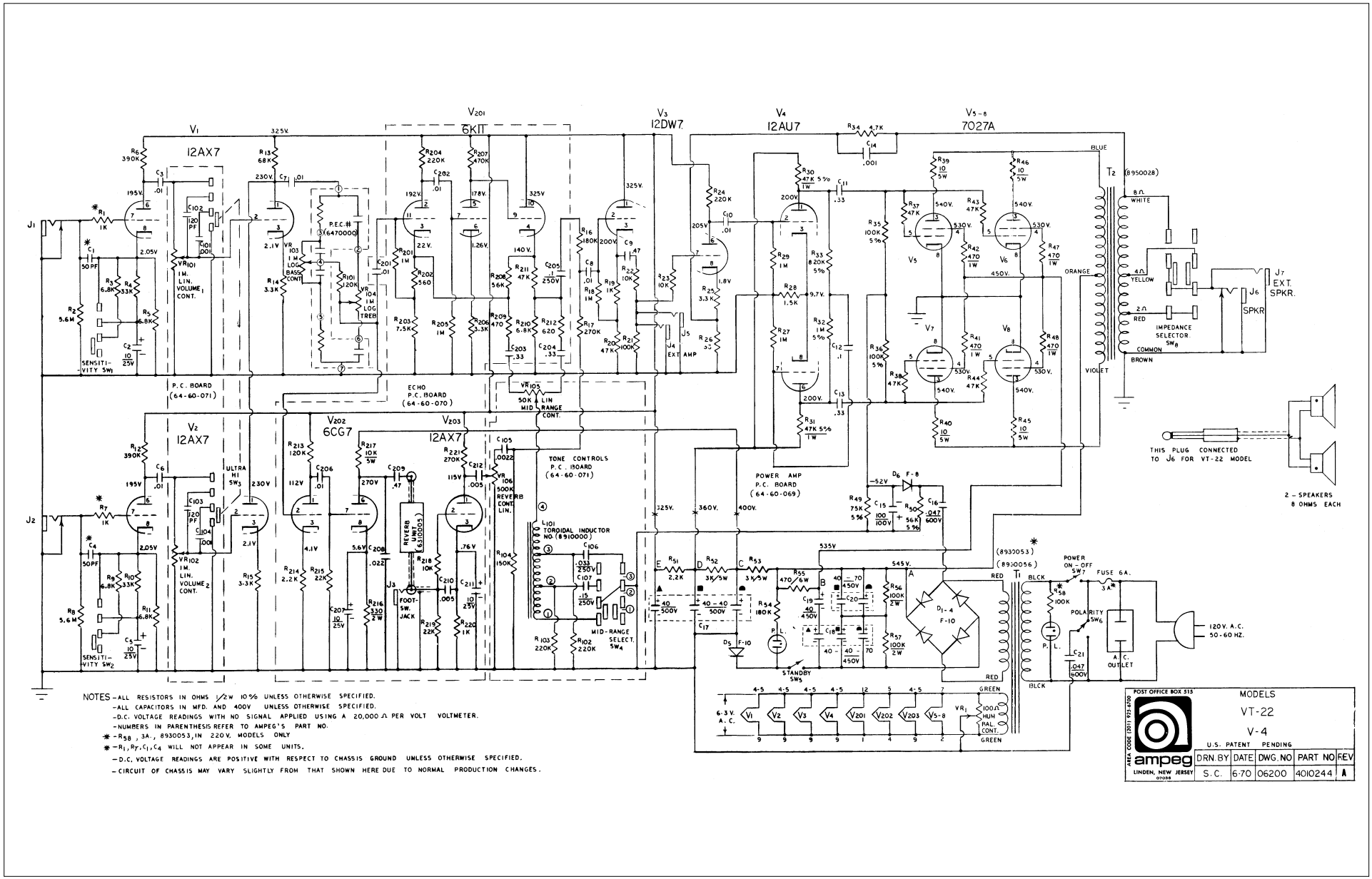

NOTES - ALL RESISTORS IN OHMS 1/2W 10% UNLESS OTHERWISE SPECIFIED.
- ALL CAPACITORS IN MFD. AND 400V UNLESS OTHERWISE SPECIFIED.
- D.C. VOLTAGE READINGS WITH NO SIGNAL APPLIED USING A 20,000 Ω PER VOLT VOLTMETER.
- NUMBERS IN PARENTHESIS REFER TO AMPEG'S PART NO.

* - R_{58}, 3A., 8930053, IN 220V. MODELS ONLY

* - R_1, R_7, C_1, C_4 WILL NOT APPEAR IN SOME UNITS.

- D.C. VOLTAGE READINGS ARE POSITIVE WITH RESPECT TO CHASSIS GROUND UNLESS OTHERWISE SPECIFIED.
- CIRCUIT OF CHASSIS MAY VARY SLIGHTLY FROM THAT SHOWN HERE DUE TO NORMAL PRODUCTION CHANGES.

POST OFFICE BOX 515 AREA CODE (201) 925-8700 ampeg LINDEN, NEW JERSEY 07036

MODELS VT-22 V-4

U.S. PATENT PENDING

DRN. BY	DATE	DWG. NO	PART NO	REV
S.C.	6-70	06200	4010244	A

V9 PREAMP

Ampeg

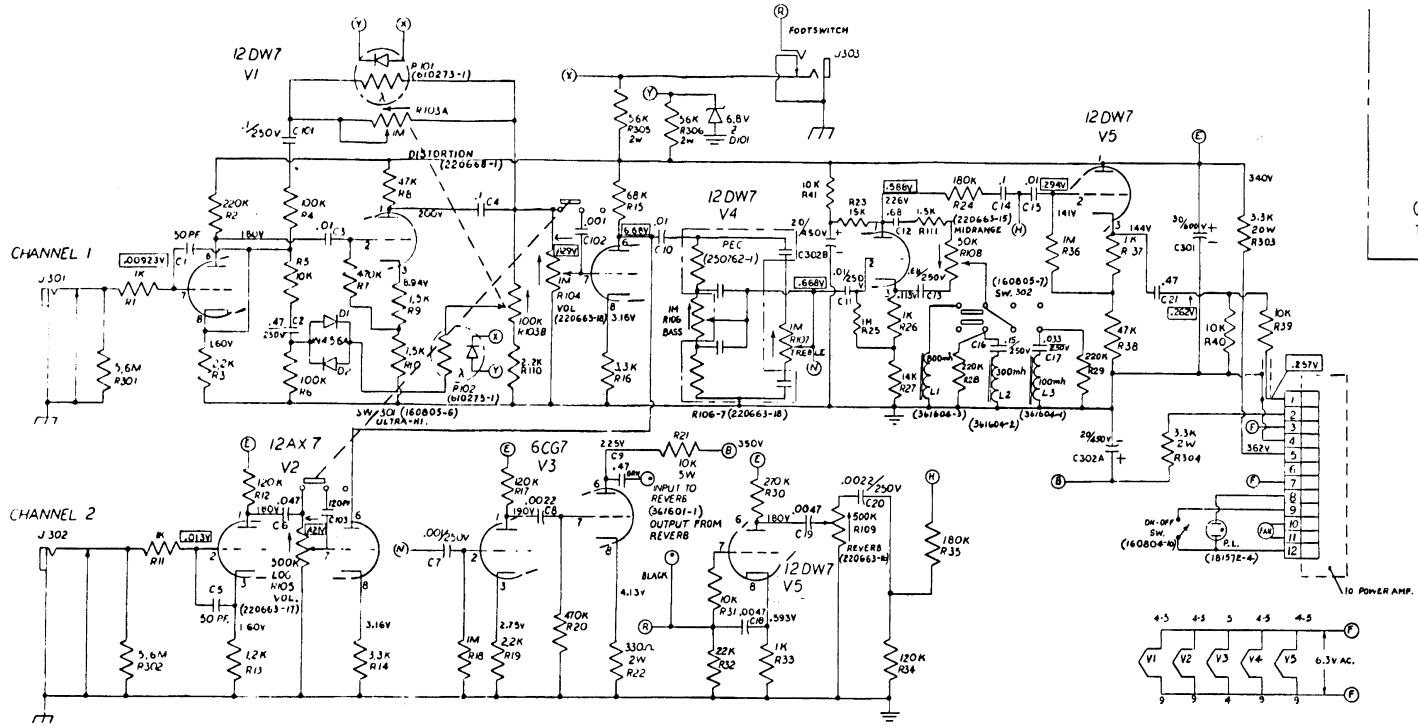

NOTES.

1. ALL RESISTORS IN OHMS 1/2W 10% UNLESS OTHERWISE SPECIFIED.
2. ALL CAPACITORS IN MFD. AND 400V UNLESS OTHERWISE SPECIFIED.
3. D.C. VOLTAGE READINGS WITH NO SIGNAL APPLIED USING A 20,000 OHM PER VOLT VOLTMETER.
4. NUMBERS IN PARENTHESIS REFER TO AMPEG'S PART NO.
5.
6. D.C. VOLTAGE READINGS ARE POSITIVE WITH RESPECT TO CHASSIS GROUND UNLESS OTHERWISE SPECIFIED.
7. CIRCUIT OF CHASSIS MAY VARY SLIGHTLY FROM THAT SHOWN HERE DUE TO NORMAL PRODUCTION CHANGES.
8. ALL VOLTAGES IN BOXES ARE A.C. AND ARE TAKEN WITH BASS, TREBLE AND MIDRANGE AT MID POSITION, ALL FRONT PANEL ROCKER SWITCHES TO THE LEFT.

591760-1

7" X 10 1/16"	591760-1
REQ. SIZE	PART NO.

ADDITIONAL SPECIFICATIONS

MATERIAL

FINISH

TRANSWITCH CIRCUITS
59 PRISTOR ROAD
COLONIA, N. J. 07067
(201) 381-5126

— TOLERANCES — UNLESS OTHERWISE SPECIFIED

DECIMALS	± TOL	FRACTIONS	± TOL
X	.030	UP TO 6	1/64
XX	.020	6 TO 24	1/32
XXX	.010	ABOVE 24	1/16

THREADS - CLASS 2
CONCENTRICITY .010 T.I.R.
MACHINE FINISHES ANGULAR TOL. ± 1°
SURFACE FINISH 64 M.R.S. OR IN MAX
DIMENSIONS IN INCHES UNLESS OTHERWISE SPECIFIED ON DRAWING
DO NOT SCALE DRAWING

THE AMPEG COMPANY
DIVISION OF THE MAGNAVOX COMPANY
P.O. BOX 311 LONDON N.J. 07036

SCHEMATIC
V9 PRE-AMP

	SIGNATURE	DATE
DR.	[illegible]	3/13/75
CHK.	[illegible]	3/13/75
ENG.	[illegible]	[illegible]

FIRST USED ON MODEL(S)
FIRST MADE FOR V9
SCALE —

THIS MATERIAL IS THE PROPERTY OF AND PROPRIETARY TO THE MAGNAVOX COMPANY AND IS NOT TO BE DISCLOSED TO OTHERS OR USED FOR OTHER THAN AUTHORIZED MAGNAVOX PURPOSES WITHOUT THE WRITTEN PERMISSION OF THE MAGNAVOX COMPANY. THIS MATERIAL MUST BE RETURNED TO THE MAGNAVOX COMPANY WHEN THE HOLDER NO LONGER REQUIRES ITS USE FOR AUTHORIZED MAGNAVOX PURPOSES.

SIZE D — DWG NO 591760 — REV A

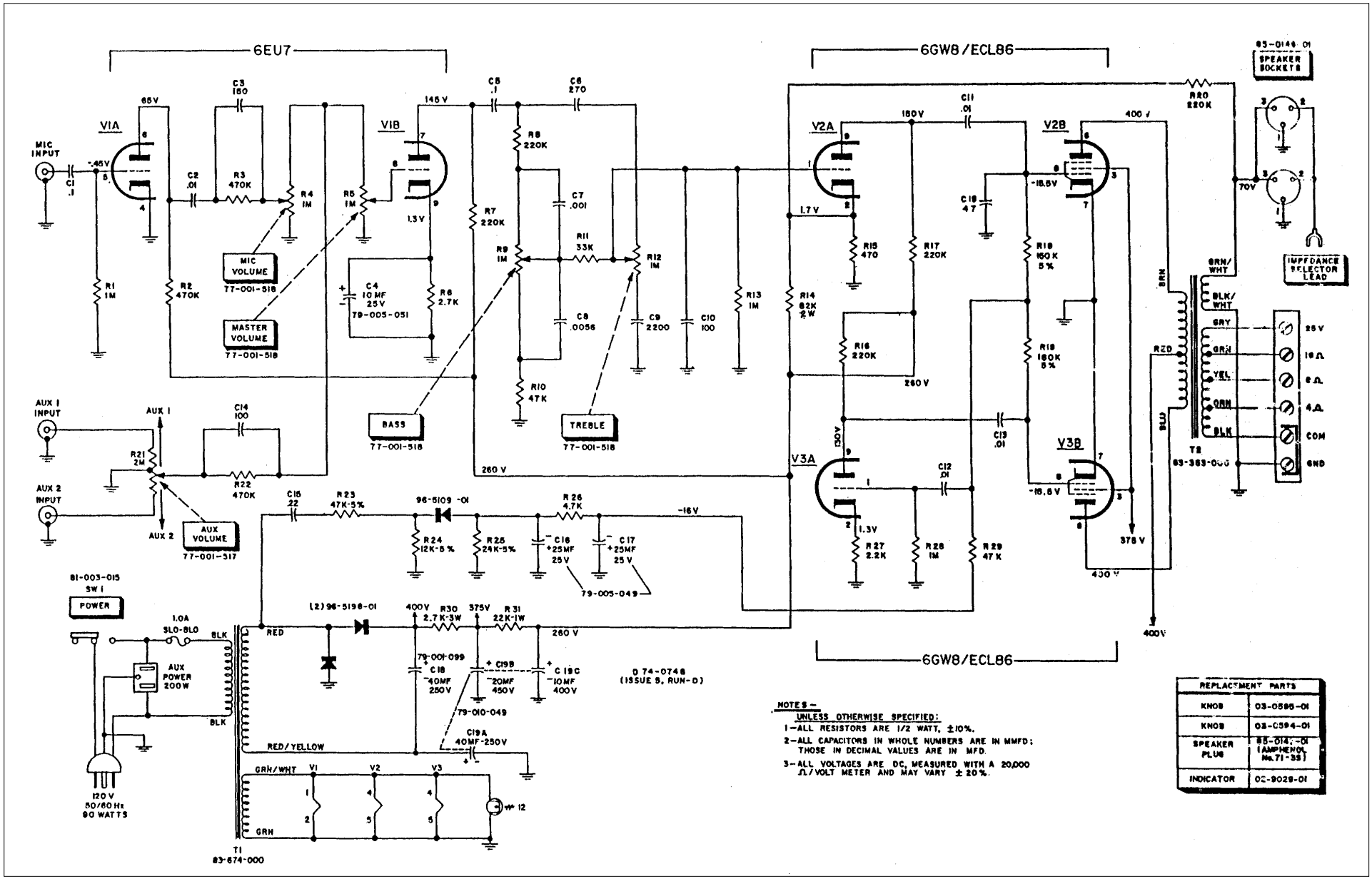
6EU7
6GW8/ECL86
V1A
V1B
V2A
V2B
V3A
V3B
MIC INPUT
AUX 1 INPUT
AUX 2 INPUT
MIC VOLUME
77-001-518
MASTER VOLUME
77-001-518
BASS
77-001-518
TREBLE
77-001-518
AUX VOLUME
77-001-517
SPEAKER SOCKETS
IMPEDANCE SELECTOR LEAD
POWER
AUX POWER 200W
120 V 50/60 Hz 90 WATTS
T1
83-674-000
T2
D 74-0748
(ISSUE 5, RUN-D)
NOTES –
UNLESS OTHERWISE SPECIFIED:
1 – ALL RESISTORS ARE 1/2 WATT, ±10%.
2 – ALL CAPACITORS IN WHOLE NUMBERS ARE IN MMFD; THOSE IN DECIMAL VALUES ARE IN MFD.
3 – ALL VOLTAGES ARE DC, MEASURED WITH A 20,000 Ω/VOLT METER AND MAY VARY ± 20%.
REPLACEMENT PARTS
KNOB 03-0595-01
KNOB 03-0594-01
SPEAKER PLUG 85-014-01 (AMPHENOL No. 71-35)
INDICATOR 02-9029-01

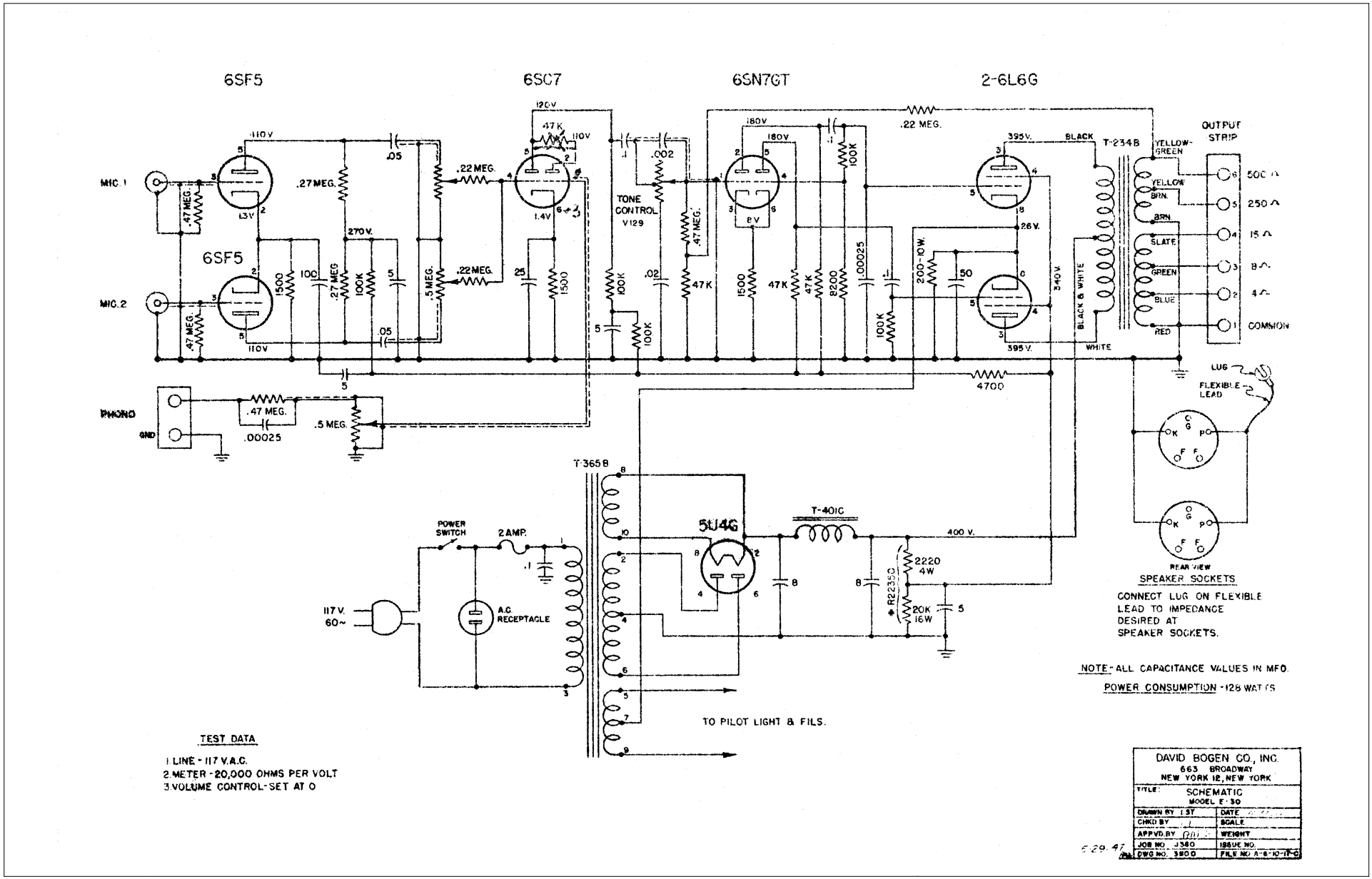
6SF5
6SC7
6SN7GT
2-6L6G
MIC. 1
MIC. 2
PHONO
GND
TONE CONTROL V129
T-234B
OUTPUT STRIP
500 Ω
250 Ω
15 Ω
8 Ω
4 Ω
COMMON
YELLOW-GREEN
YELLOW
BRN.
SLATE
GREEN
BLUE
RED
BLACK
WHITE
BLACK & WHITE
LUG
FLEXIBLE LEAD
REAR VIEW
SPEAKER SOCKETS
CONNECT LUG ON FLEXIBLE LEAD TO IMPEDANCE DESIRED AT SPEAKER SOCKETS.
NOTE-ALL CAPACITANCE VALUES IN MFD.
POWER CONSUMPTION-128 WATTS
T-365B
T-401C
5U4G
POWER SWITCH
2 AMP.
117 V. 60~
A.C. RECEPTACLE
TO PILOT LIGHT & FILS.
TEST DATA
1. LINE - 117 V.A.C.
2. METER - 20,000 OHMS PER VOLT
3. VOLUME CONTROL-SET AT 0
DAVID BOGEN CO., INC.
663 BROADWAY
NEW YORK 12, NEW YORK
TITLE: SCHEMATIC
MODEL E-30
DRAWN BY I.ST
CHKD BY
APPVD BY
JOB NO. J380
DWG NO. 3800
DATE
SCALE
WEIGHT
ISSUE NO.
FILE NO. A-6-10-15-C
E 29-47

40 WATTS Hi-Fi AMPLIFIER

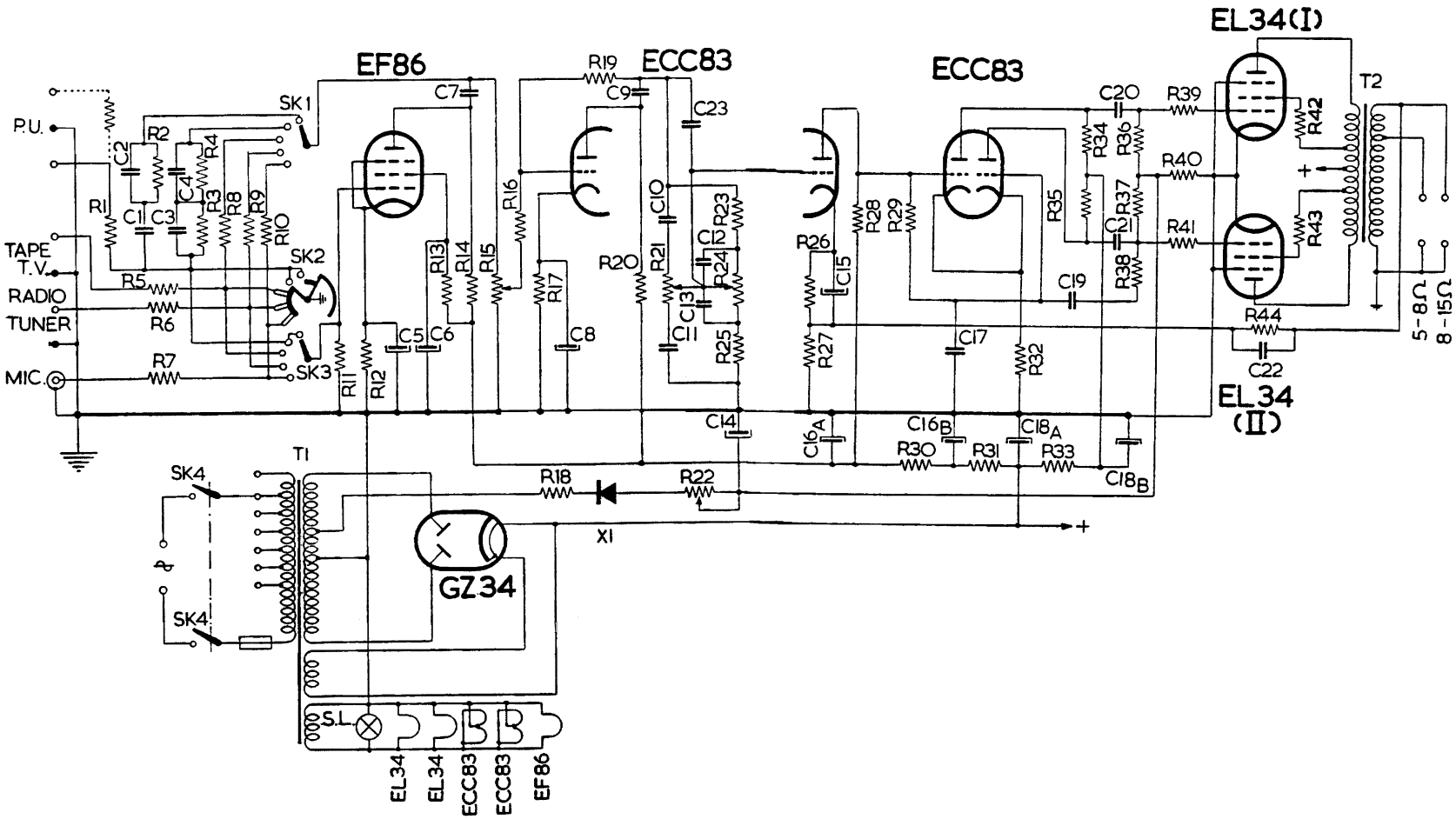

CONTENTS AND CIRCUIT DIAGRAM WITHOUT ANY GUARANTEE TO PATENT RIGHTS

VARICOMP-I

BTE

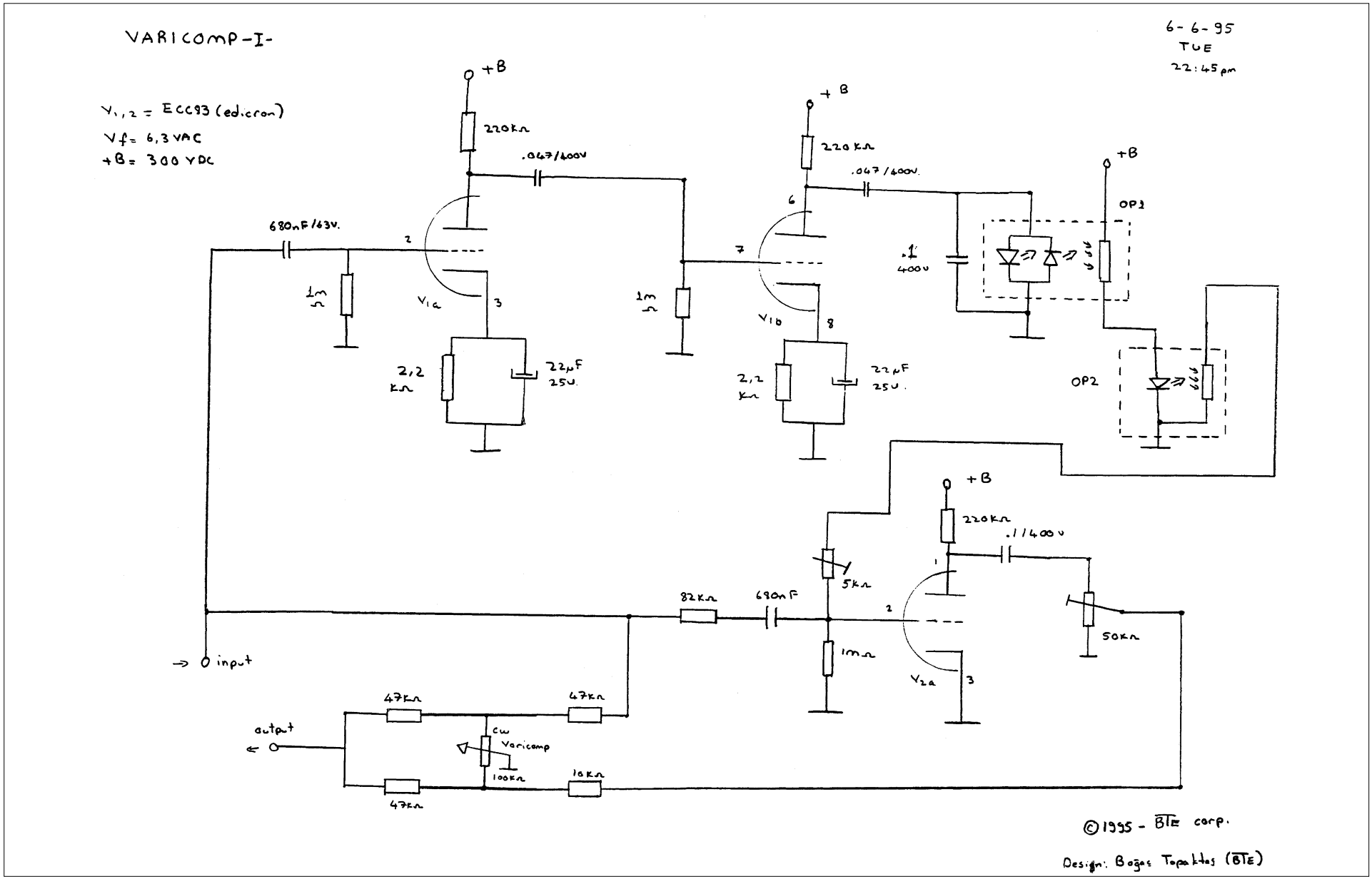

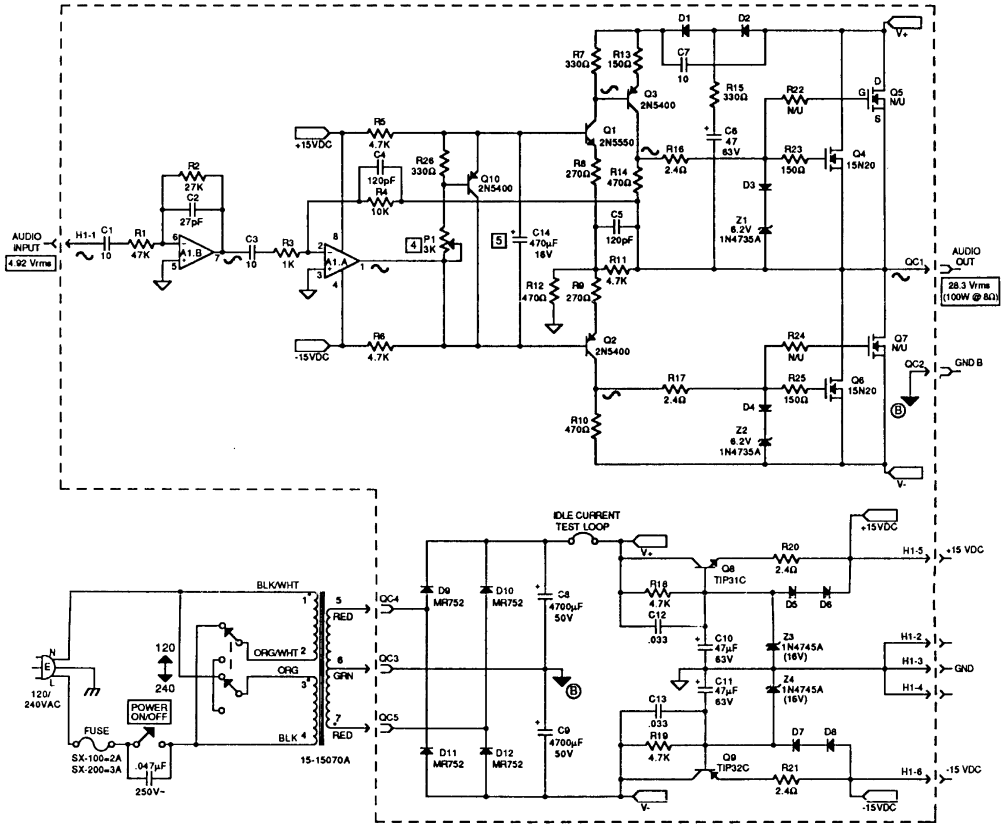

5. ADDED AS SECONDARY.
4. ADJUST P1 FOR 200mA AT IDLE CURRENT TEST LOOP.
3. A1 IS A 4558 TYPE OP AMP.
2. ALL CAPACITORS IN MICROFARADS (EXCEPT AS NOTED).
1. ALL DIODES ARE 1N4003 (EXPECT AS NOTED).

NOTES: UNLESS OTHERWISE SPECIFIED.

LAST USED LIST			
SYM			
A	1		
C	14		
D	12		
H	1		
P	1		
Q	10		
R	26		
Z	4		

CARVIN
1155 INDUSTRIAL AVE.
ESCONDIDO, CA 92029
(619) 747-1710
FAX 747-9065

FET100
POWER MODULE
(USED IN SX-100, SX-200)

DRAWN BY:	C. McEUEN	DATE:	10JAN91
APPROVED:		DATE:	
PCB NO:	30-FET100-8	REV:	A
ASSY. NO:	80-01018	REV:	C
REVISED BY:	C. McEUEN	DATE:	14JAN91

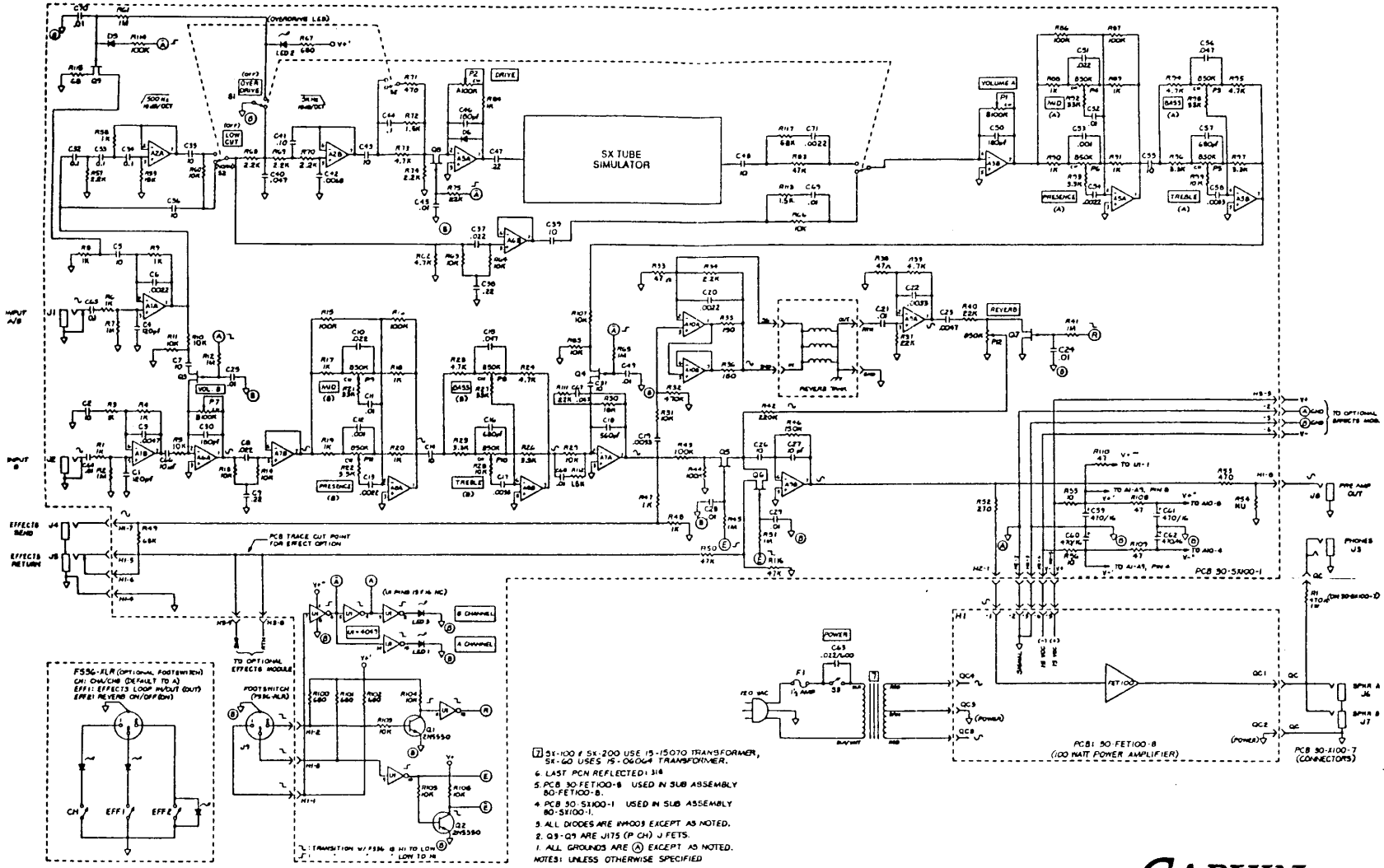

CARVIN

SCHEMATIC
PRE-AMP
Section of SX Series

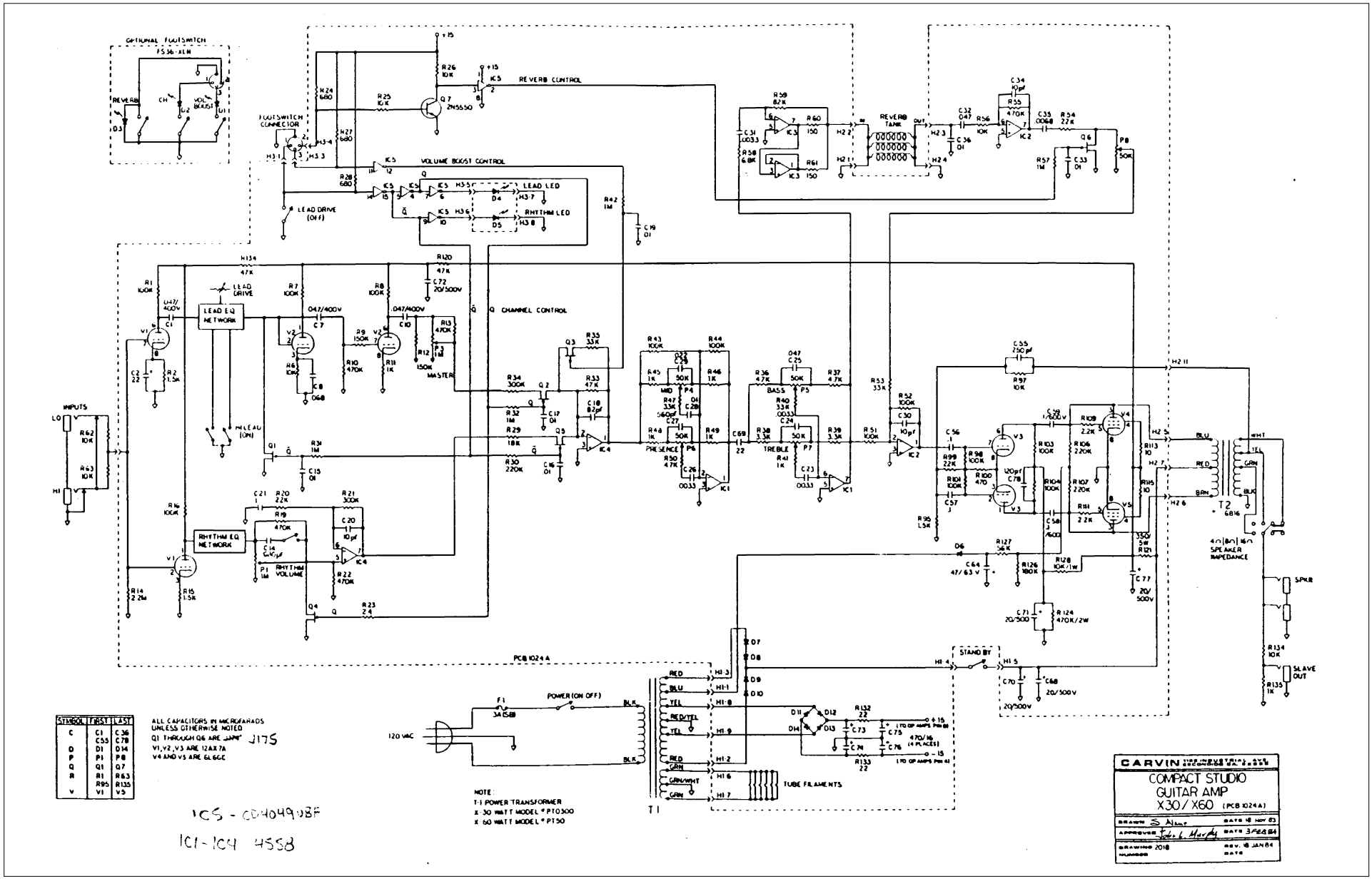
OPTIONAL FOOTSWITCH
FS36-XLR
REVERB
CH
VOL BOOST
FOOTSWITCH CONNECTOR
REVERB CONTROL
VOLUME BOOST CONTROL
LEAD LED
RHYTHM LED
LEAD DRIVE (OFF)
REVERB TANK
LEAD DRIVE
LEAD EQ NETWORK
Q CHANNEL CONTROL
MASTER
INPUTS
LEAD (ON)
RHYTHM EQ NETWORK
RHYTHM VOLUME
BASS
TREBLE
PRESENCE
SPEAKER IMPEDANCE
SPKR
SLAVE OUT
STAND BY
POWER (ON OFF)
120 VAC
TUBE FILAMENTS
PCB 1024A
T1
T2
NOTE:
T-1 POWER TRANSFORMER
X-30 WATT MODEL # PT0300
X-60 WATT MODEL # PT50
ALL CAPACITORS IN MICROFARADS UNLESS OTHERWISE NOTED
Q1 THROUGH Q6 ARE 2N5550
V1,V2,V3 ARE 12AX7A
V4 AND V5 ARE 6L6GC
CARVIN
COMPACT STUDIO GUITAR AMP
X30/X60 (PCB 1024A)
DRAWING 2018

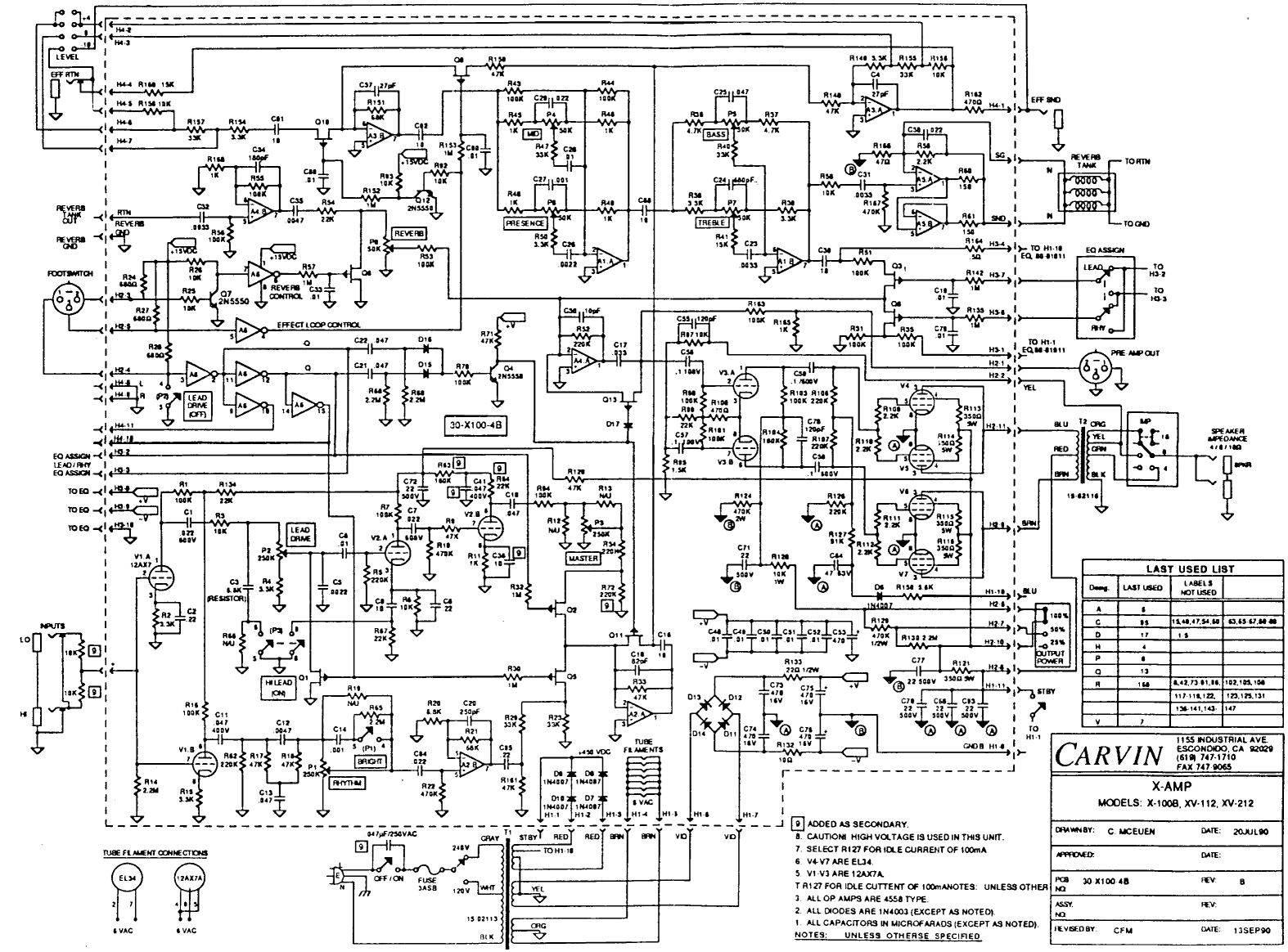

LAST USED LIST			
Desig.	LAST USED	LABELS NOT USED	
A	8		
C	85	13,46,47,54,60	63,65 67,80 86
D	17	1-5	
H	4		
P	8		
Q	13		
R	168		8,42,73 91,98, 102,105,108
		117-119,122,	123,125,131
		136-141,143-	147
V	7		

CARVIN
1155 INDUSTRIAL AVE.
ESCONDIDO, CA 92029
(619) 747-1710
FAX 747 9065

X-AMP

MODELS: X-100B, XV-112, XV-212

DRAWN BY:	C. MCEUEN	DATE:	20JUL90
APPROVED:		DATE:	
PCB NO.	30-X100-4B	REV:	B
ASSY. NO.		REV:	
REVISED BY:	CFM	DATE:	13SEP90

9 ADDED AS SECONDARY.
8. CAUTION! HIGH VOLTAGE IS USED IN THIS UNIT.
7. SELECT R127 FOR IDLE CURRENT OF 100mA
6. V4-V7 ARE EL34.
5. V1-V3 ARE 12AX7A.
T R127 FOR IDLE CUTTENT OF 100mANOTES: UNLESS OTHER
3. ALL OP AMPS ARE 4558 TYPE.
2. ALL DIODES ARE 1N4003 (EXCEPT AS NOTED).
1. ALL CAPACITORS IN MICROFARADS (EXCEPT AS NOTED).
NOTES: UNLESS OTHERSE SPECIFIED

REVERB BOX 9100

Danelectro

NOTES:

1. VALUES OF CAPACITORS IN MFD.
2. ALL RESISTORS ARE ½ WATT UNLESS OTHERWISE NOTED.
3. VOLTAGES MEASURED FROM POINTS INDICATED TO CHASSIS WITH 20,000 OHM/VOLT METER.

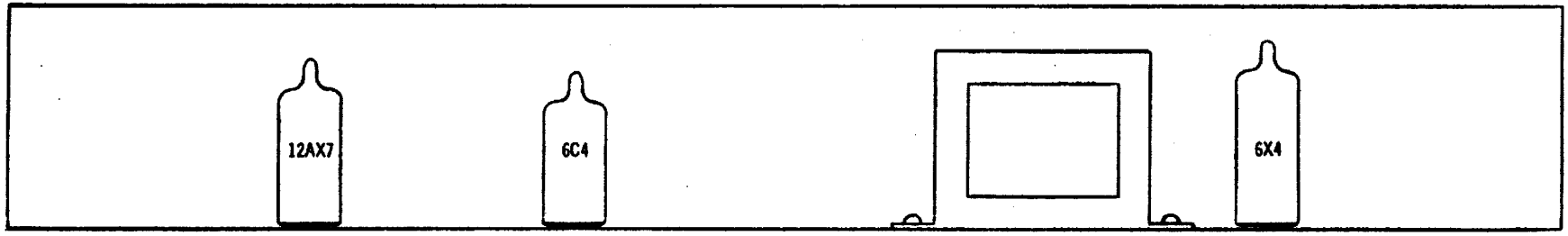

TUBE LAYOUT

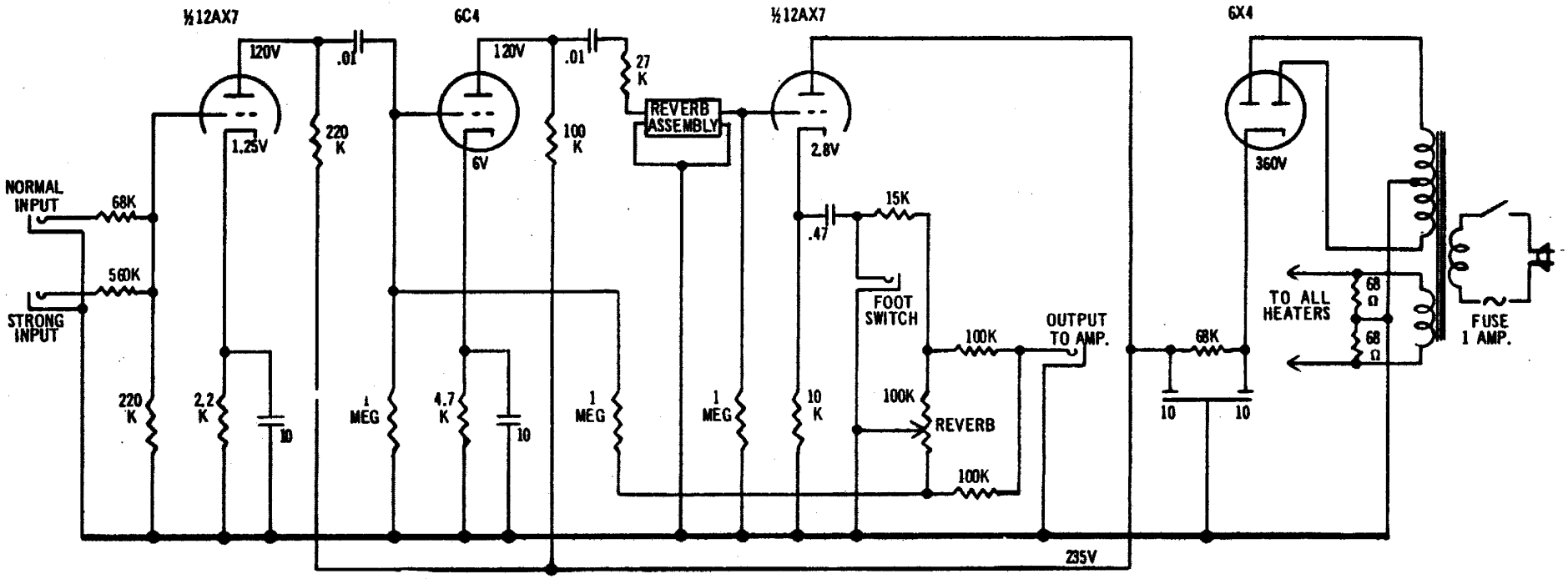

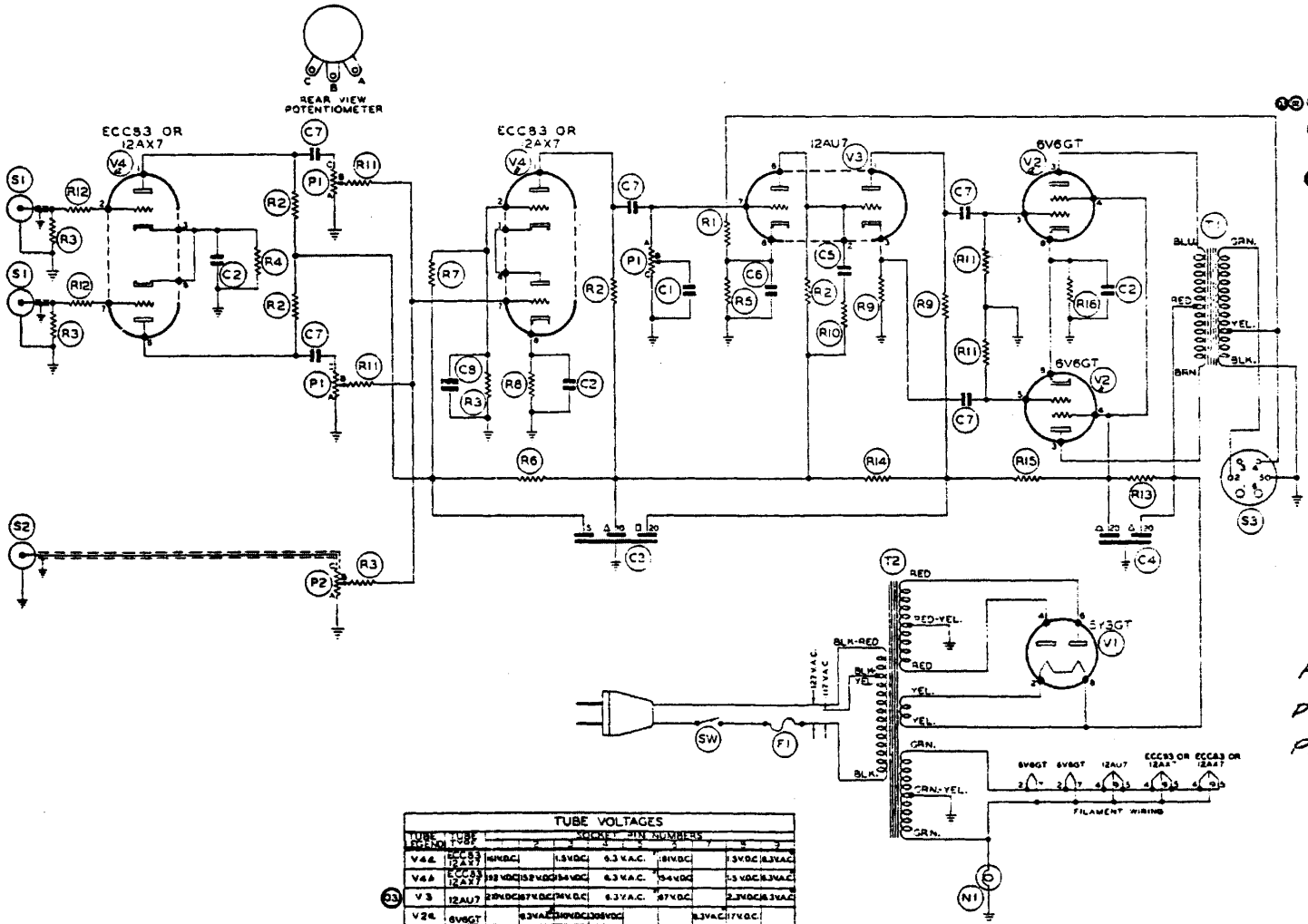

LIST OF ELECTRICAL PARTS

LEGEND	DESCRIPTION	QTY.	PART NO.
C1	CAPACITOR .0022 MFD. 500 V.	1	199-1002-222
C2	" 25 " 25 V.	3	199-2001-256
C3	" 5-10-20 "	1	199-2904
C4	" 20-20 " 500 V.	1	199-2914
C5	" .00025 " 500 V.	1	199-3001-251
C6	" .01 " 400 V.	1	199-4025-103
C7	" .047 " 400 V.	5	199-4025-473
C8	" .10 " 400 V.	1	199-4025-104
V1	ELECTRON TUBE 5Y3GT	1	282-5Y3GT
V2	" " 6V6GT	2	282-6V6GT
V3	" " 12AU7	1	282-12AU7
V4	" " 12AX7 OR ECC83	2	282-12AX7/ECC83
F1	FUSE 2 AMPERE TYPE 3AG2	1	320-935-0200
N1	LAMP PILOT MAZDA #47	1	456-1
S1	RECEPTACLE MICROPHONE	2	597-7299
S2	" AUX.	1	597-12692-01
S3	" OUTPUT	1	635-03-09651
R1	RESISTOR 6800 OHM ½ WATT	1	600-0080-682
R2	" 100K " " "	4	600-0080-104
R3	" 1 MEG. " " "	4	600-0080-105
R4	" 1200 " " "	1	600-0080-122
R5	" 1500 " " "	1	600-0080-152
R6	" 15K " " "	1	600-0080-153
R7	" 330K " " "	1	600-0080-334
R8	" 2700 " " "	1	600-0080-272
R9	" 33K " " "	2	600-0080-333
R10	" 4700 " " "	1	600-0080-472
R11	" 470K " " "	4	600-0080-474
R12	" 68K " " "	2	600-0080-683
R13	" 1K " 1 WATT	1	600-0116-102
R14	" 10K " 1 "	1	600-0116-103
R15	" 4700 " " "	1	600-0116-472
R16	" 200 " 5 "	1	600-1008-201
P1	POTENTIOMETER 500K	3	601-61
P2	" 2.5 MEG.	1	601-94
SW	SWITCH - A.C.	1	680-192
T1	TRANSFORMER - OUTPUT	1	710-2054
T2	" - POWER	1	710-4097

TUBE VOLTAGES

TUBE LEGEND	TUBE TYPE	SOCKET PIN NUMBERS 1	2	3	4	5	6	7	8	9
V4a	ECC83 12AX7	41VDC		1.5VDC		6.3 V.A.C.	81VDC		1.3VDC	6.3VAC
V4b	ECC83 12AX7	192 VDC	152 VDC	1.5VDC	54VDC	6.3 V.A.C.	54VDC		1.3 VDC	6.3VAC
V3	12AU7	216VDC	187 VDC	74V.D.C.		6.3 V.A.C.	87VDC		2.3VDC	6.3VAC
V2a	6V6GT		6.3VAC	310VDC	305VDC			6.3VAC	17V.D.C.	
V2b	6V6GT		6.3VAC	310VDC	305VDC			6.3VAC	17V.D.C.	
V1	5Y3GT		320VDC		305VAC		305VAC		320VDC	

USE A 10 MEGOHM INPUT V.T.V.M. FOR VOLTAGE MEASUREMENTS TO GROUND.

NOTE: ALL FILAMENT VOLTAGES MEASURED BETWEEN PINS MARKED 9 AND 4

ALSO USED ON THE FOLLOWING: 1B385, C385, 1A385A, 1B385A, 1C385A.

05	ADD "A" MOD. NOS.	12-4-57	
04	ADD ECC83 TUBE	1-28-56	
03	[illegible]	[illegible]	
02	ADD 1 CAP. [illegible]	12-23-55	
01	[illegible]	[illegible]	
REV.	MOD.	DATE	APPD.

DUKANE CORPORATION — ESTABLISHED AS "DEPARTMENT 428" ST. CHARLES, ILLINOIS, U.S.A.

SCHEMATIC DIAGRAM MODEL 1A385 10 WATT AMPLIFIER

SCALE — DATE 10-3-55 — DRAWN — APPD. — CHECKED — ENGR. — C

NO. 190-625

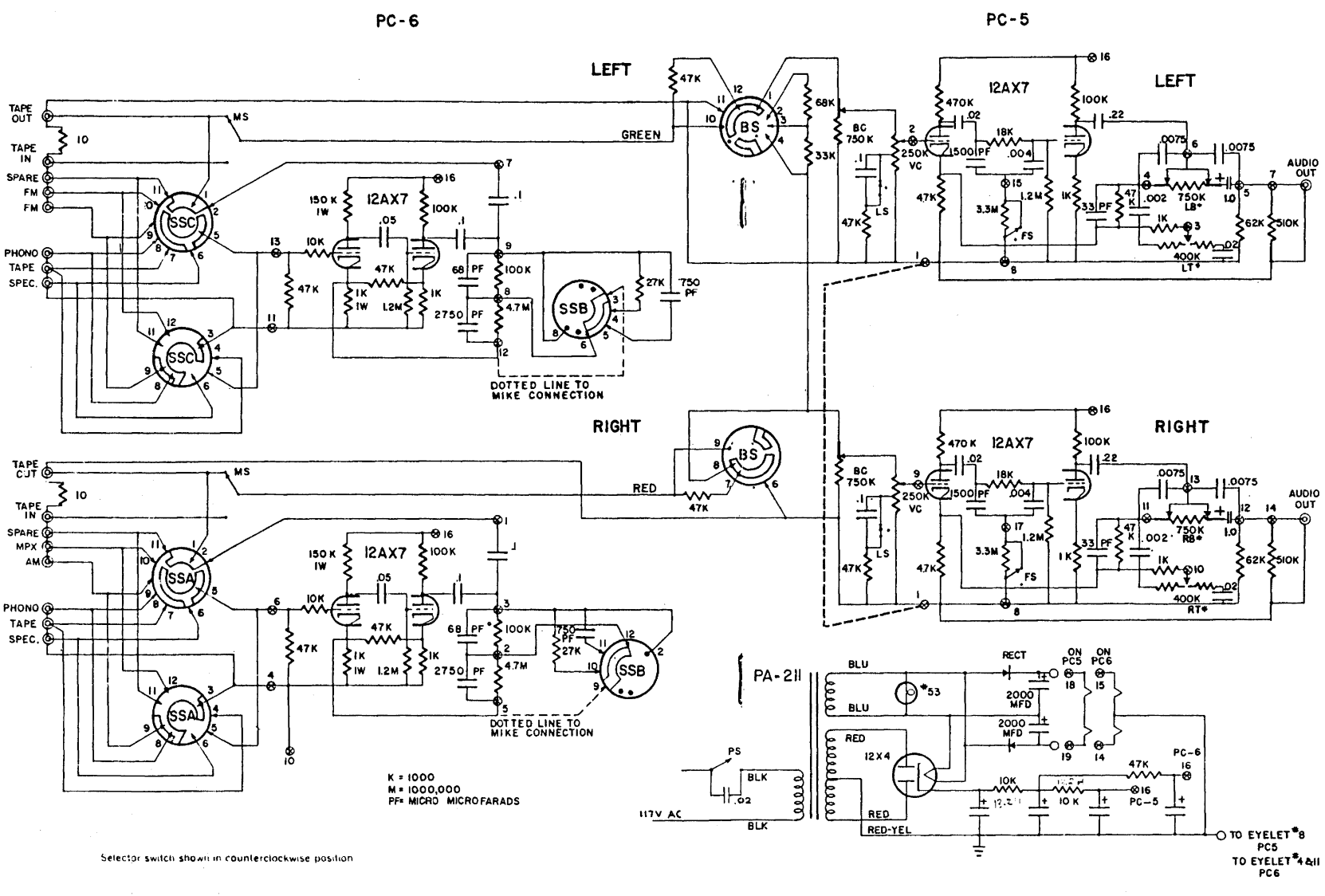

VOLTAGE CHART

Tube pins numbered clockwise viewed from the bottom.

All readings taken from pin to chassis (except #3 and #4 of 12X4) using a vacuum tube voltmeter.

Either tube PC-6

1 115 V DC
2 0
3 .7 V DC
4 0
5 ± 11 V DC
6 135 V DC
7 0
8 .8 V DC
9 ± 5.5 V DC

Either tube PC-5

1 175 V DC
2 0
3 1.45 V DC
4 Less than 1 volt
5 ± 11 V DC
6 200 V DC
7 0
8 1.25 V DC
9 ± 5.5 V DC

12X4

1 335 V AC
2 0
3 ┐ 10.5 V AC
4 ┘
5 0
6 335 V AC
7 405 V DC

Quad Filter Capacitor

■ 405 V DC
▲ 355 V DC
— 330 V DC
◠ 210 V DC

SCHEMATIC DIAGRAM

DYNACO SCA-35

All resistors are ½ watt, 10% unless otherwise noted.

R 1	1.2 megohms	R 18	1.2 megohms	R 35	470,000 ohms	C 9	330 pf mica 5%
R 2	150,000 ohms 1 watt 5%	R 19	47,000 ohms	R 36	470,000 ohms	C 10	3.3 nf 10%
R 3	5,600 ohms 5%	R 20	390 ohms	R 37	82,000 ohms 5%	C 11	10 nf 10%
R 4	120 ohms 1 watt 5%	R 21	18,000 ohms 5%	R 38	22,000 ohms	C 12	10 nf 10%
R 5	120 ohms 1 watt 5%	R 22	100,000 ohms 5%	R 39	2200 ohms 1 watt	C 13	3.3 nf 10%
R 6	1.2 megohms	R 23	47,000 ohms	R 40	2200 ohms 1 watt	C 14	3.3 nf 10%
R 7	47,000 ohms	R 24	1.5 megohms	R 41	50 ohms 5 watts	C 15	22 nf 10%
R 8	390 ohms	R 25	10,000 ohms	R 42	95 ohms 5 watts 5%	C 16	22 nf 10%
R 9	18,000 ohms 5%	R 26	10,000 ohms	C 1	.1 mfd @ 16 v.	C 17	.1 mfd @ 16 v.
R 10	100,000 ohms 5%	R 27	18,000 ohms	C 2	22 nf @ 400 v.	C 18	1 mfd @ 250 v.
R 11	47,000 ohms	R 28	18,000 ohms	C 3	.1 mfd @ 400 v.	C 19	.1 mfd @ 400 v.
R 12	1.5 megohms	R 29	4.7 megohms	C 4	330 pf mica 5%	C 20	.1 mfd @ 400 v.
R 13	1.2 megohms	R 30	270,000 ohms 1 watt 5%	C 5	3.3 nf 10%	C 21	12 pf @ 600 v. 5%
R 14	150,000 ohms 1 watt 5%	R 31	560 ohms 5%	C 6	.1 mfd @ 16 v.	C 22	.02 mfd @ 500 v.
R 15	5,600 ohms 5%	R 32	22,000 ohms 1 watt 5%	C 7	22 nf @ 400 v.	C 23	50/50 mfd @ 450 v.
R 16	120 ohms 1 watt 5%	R 33	120,000 ohms 5%	C 8	.1 mfd @ 400 v.	C 24	60/40/20 @ 450 v.; 100 @ 25 v.
R 17	120 ohms 1 watt 5%	R 34	27,000 ohms 1 watt 5%				

D 1	Silicon rectifier, 500 ma, 1000 PIV
D 2	Silicon rectifier, 500 ma, 1000 PIV
volume control	250,000 ohms
balance control	750,000 ohms
bass control	2 megohms
treble control	500,000 ohms
hum control	1,000 ohms
V 1	12AX7/ECC-83
V 2	12AX7/ECC-83
V 3	7199
V 4	7199
V 5	6BQ5/EL-84
V 6	6BQ5/EL-84
V 7	6BQ5/EL-84
V 8	6BQ5/EL-84

VOLTAGE CHART

PIN	1	2	3	4	5	6	7	8	9
V1 & V2 (12AX7)	180	-2	.5	6.3 AC		105	0	25	
V3 & V4 (7199)	255	55	32	6.3 AC		7	0	70	55
V-5-6-7-8 (6BQ5)	0*	0	16	6.3 AC		0*	360	0*	365
TS-1 LUG	0	380	0	315 AC		315 AC			
C24 LUG	380	370	350	14					
C23 LUG	320	350							

* UNUSED PINS MAY HAVE INTERNAL CONNECTIONS, THEREFORE SOME TUBES (DEPENDING ON BRAND) VOLTAGES APPEAR AT THESE POINTS.

VOLTAGES MEASURED WITH V.T.V.M.

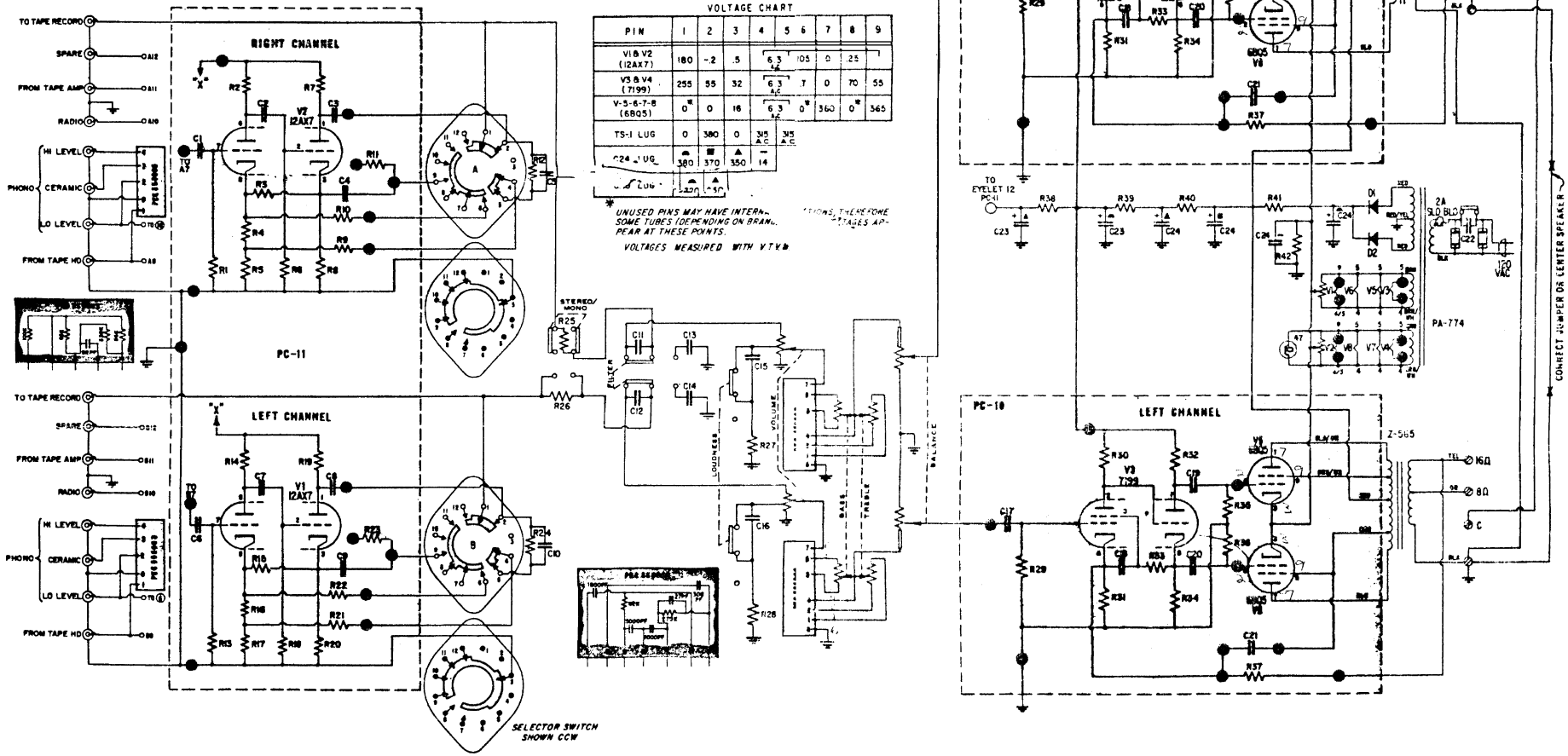

Bass-King T

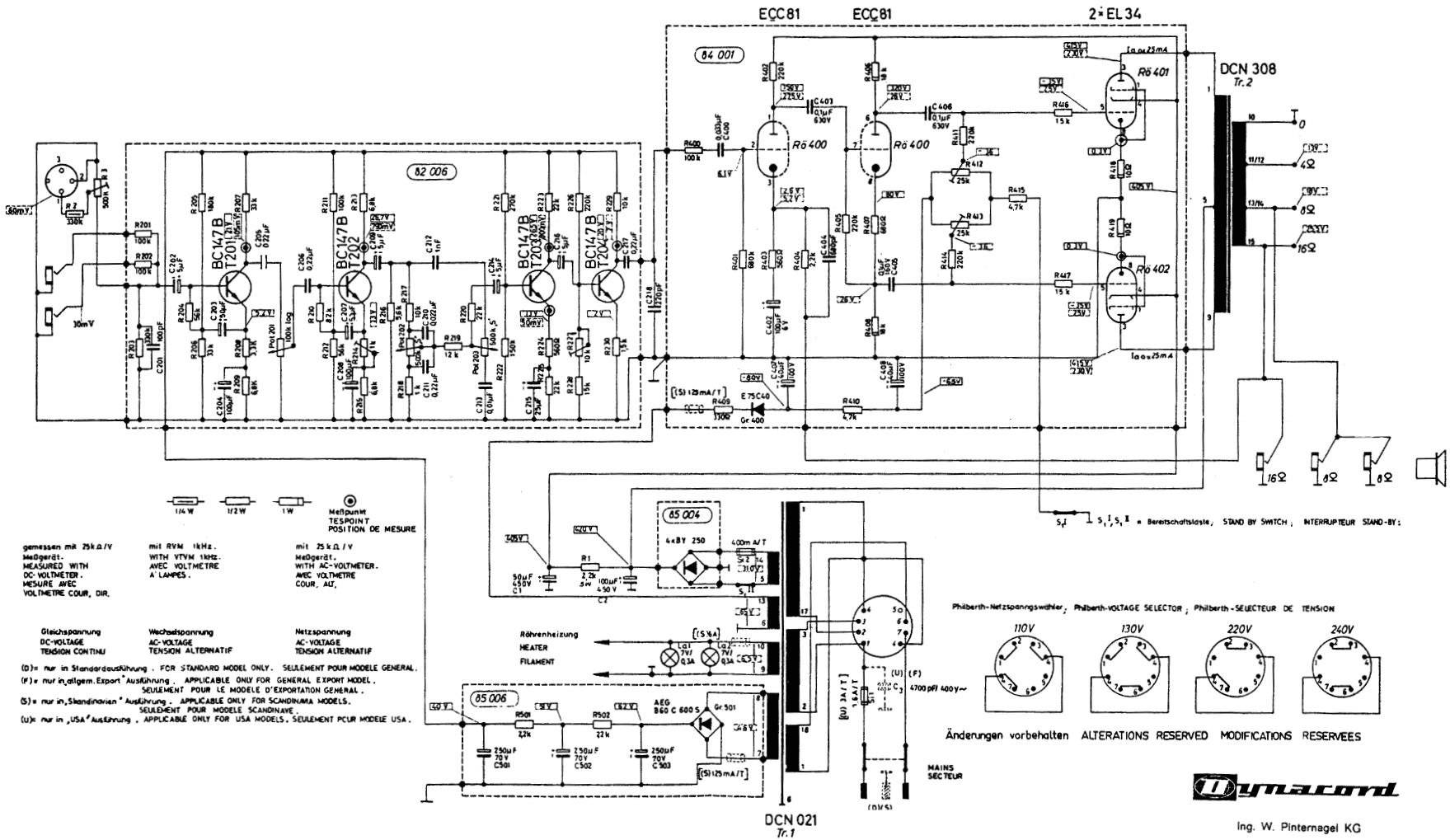
ECC81
ECC81
2×EL 34
84 001
82 006
85 004
85 006
DCN 308
Tr. 2
DCN 021
Tr. 1
BC147B
Rö 400
Rö 401
Rö 402
E 75C40
4×BY 250
AEG
B60 C 600 S
Röhrenheizung
HEATER
FILAMENT
MAINS
SECTEUR
Meßpunkt
TESPOINT
POSITION DE MESURE
gemessen mit 25 kΩ/V
Meßgerät.
MEASURED WITH
DC-VOLTMETER.
MESURE AVEC
VOLTMETRE COUR. DIR.
mit RVM 1kHz.
WITH VTVM 1kHz.
AVEC VOLTMETRE
A LAMPES.
mit 25 kΩ/V
Meßgerät.
WITH AC-VOLTMETER.
AVEC VOLTMETRE
COUR. ALT.
Gleichspannung
DC-VOLTAGE
TENSION CONTINU
Wechselspannung
AC-VOLTAGE
TENSION ALTERNATIF
Netzspannung
AC-VOLTAGE
TENSION ALTERNATIF
(D)= nur in Standardausführung. FOR STANDARD MODEL ONLY. SEULEMENT POUR MODELE GENERAL.
(F)= nur in „allgem. Export" Ausführung. APPLICABLE ONLY FOR GENERAL EXPORT MODEL.
SEULEMENT POUR LE MODELE D'EXPORTATION GENERAL.
(S)= nur in „Skandinavien" Ausführung. APPLICABLE ONLY FOR SCANDINAVIA MODELS.
SEULEMENT POUR MODELE SCANDINAVE.
(U)= nur in „USA" Ausführung. APPLICABLE ONLY FOR USA MODELS. SEULEMENT POUR MODELE USA.
Philberth-Netzspannungswähler; Philberth-VOLTAGE SELECTOR; Philberth-SELECTEUR DE TENSION
110V
130V
220V
240V
Änderungen vorbehalten ALTERATIONS RESERVED MODIFICATIONS RESERVEES
Dynacord
Ing. W. Pinternagel KG

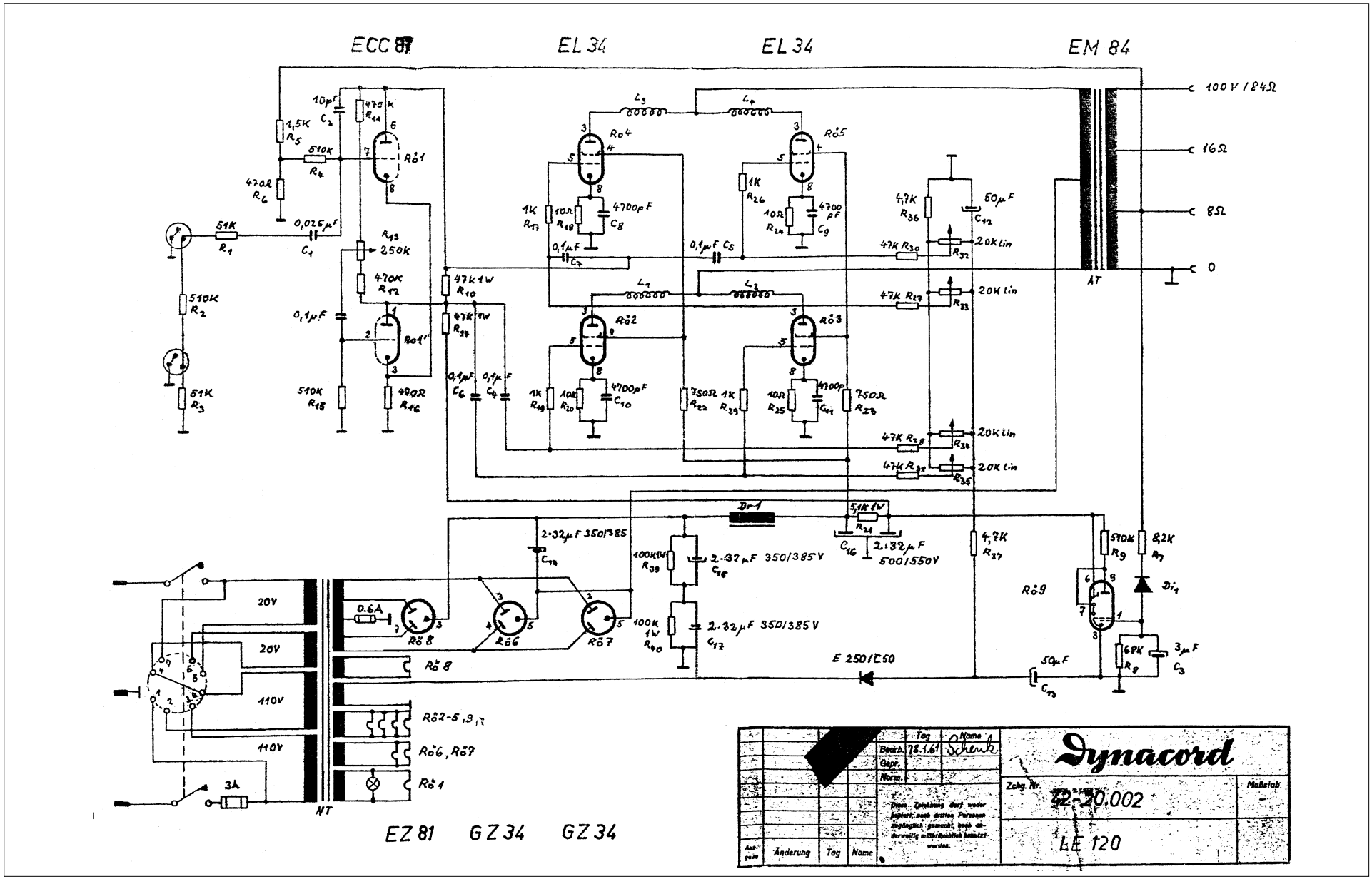
ECC 81
EL 34
EL 34
EM 84
100 V / 8,4Ω
16Ω
8Ω
0
AT
NT
EZ 81
GZ 34
GZ 34
20V
20V
110V
110V
3A
0.6A
E 250/C50
Dr 1
Di 1
Röhre 1
Röhre 2
Röhre 3
Röhre 4
Röhre 5
Röhre 6
Röhre 7
Röhre 8
Röhre 9
Röhre 1'
Röhre 2-5, 9, 17
Röhre 6, Röhre 7
Röhre 8
Tag
Name
Bearb. 28.1.61
Schenk
Gepr.
Norm.
Änderung
Tag
Name
Dynacord
Zchg. Nr. 22-20.002
Maßstab
LE 120

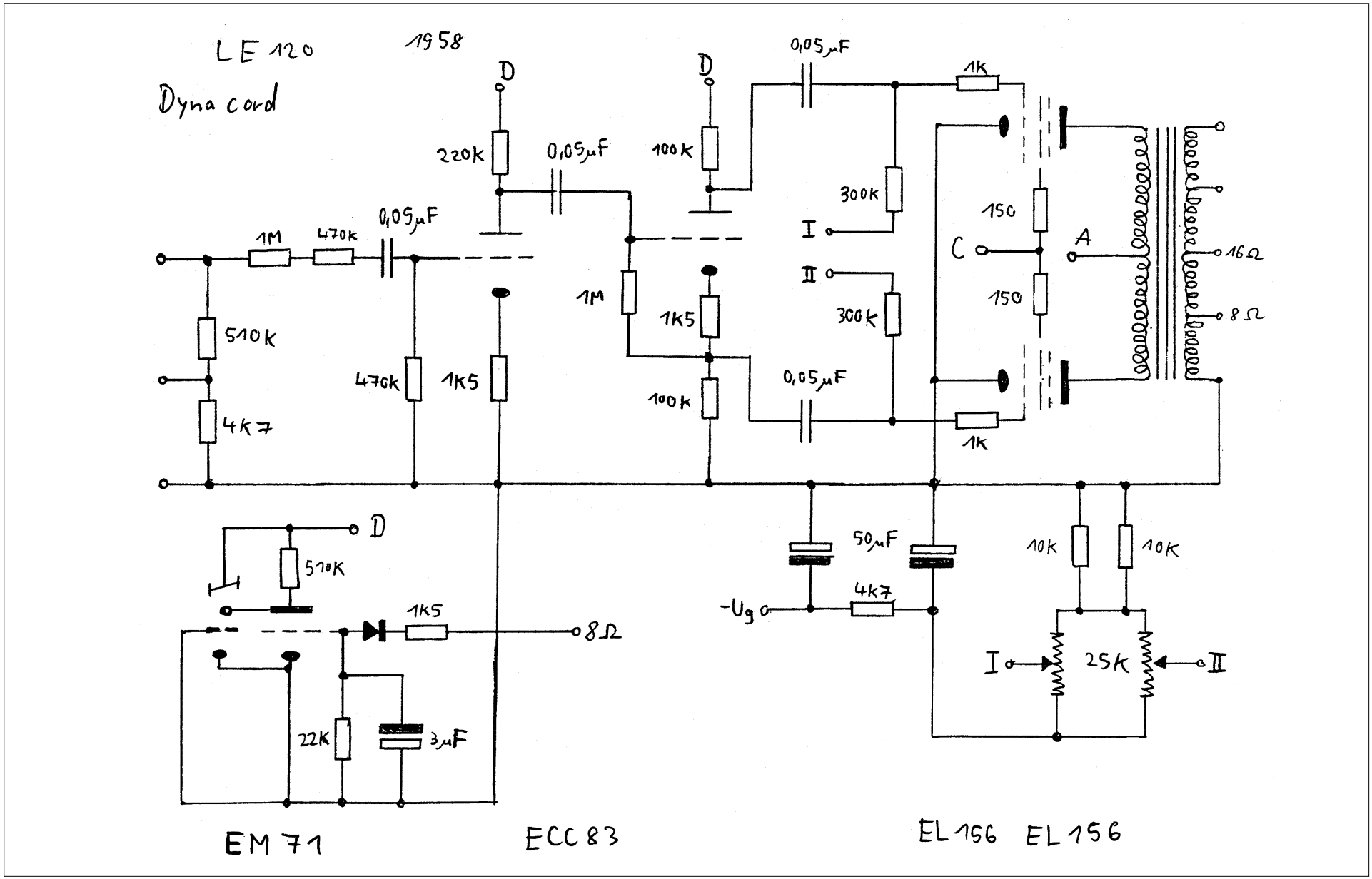
LE 120
1958
Dyna cord
D
220K
0,05µF
1M
470K
0,05µF
510K
4K7
470K
1K5
1M
1K5
100K
D
100K
0,05µF
300K
I
II
300K
0,05µF
1K
150
C
A
150
1K
16Ω
8Ω
D
510K
1K5
8Ω
22K
3µF
50µF
-Ug
4K7
10K
10K
I
25K
II
EM 71
ECC 83
EL 156
EL 156

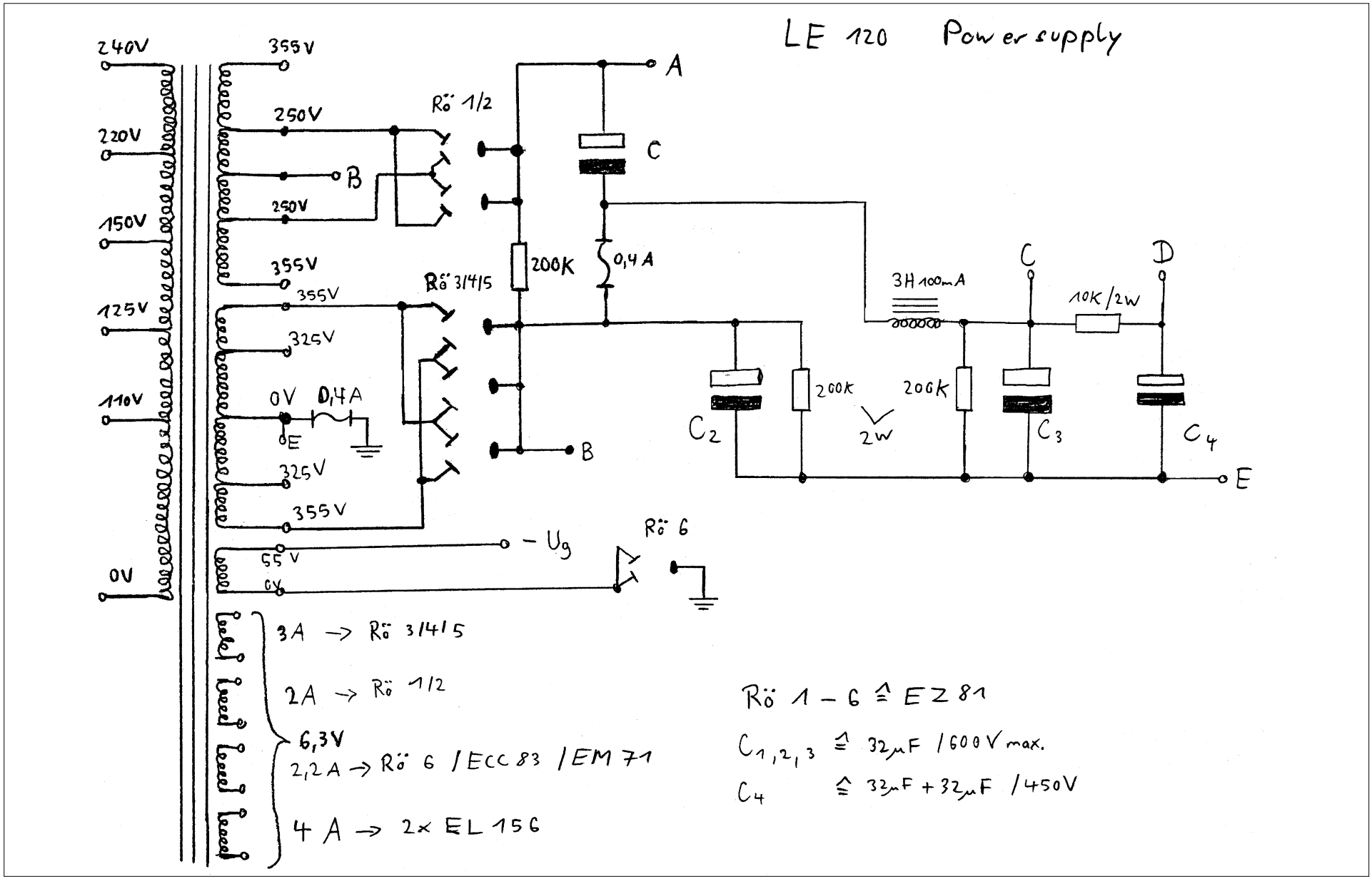
LE 120 Power supply
240V
220V
150V
125V
110V
0V
355V
250V
B
250V
355V
355V
325V
0V
0,4A
E
325V
355V
55V
0V
Rö 1/2
Rö 3/4/5
200K
0,4A
A
C
B
3H 100mA
C
D
10K/2W
200K
200K
2W
C2
C3
C4
E
- Ug
Rö 6
3A → Rö 3/4/5
2A → Rö 1/2
6,3V
2,2A → Rö 6 / ECC 83 / EM 71
4 A → 2x EL 156
Rö 1 – 6 ≙ EZ 81
C1,2,3 ≙ 32µF / 600V max.
C4 ≙ 32µF + 32µF / 450V

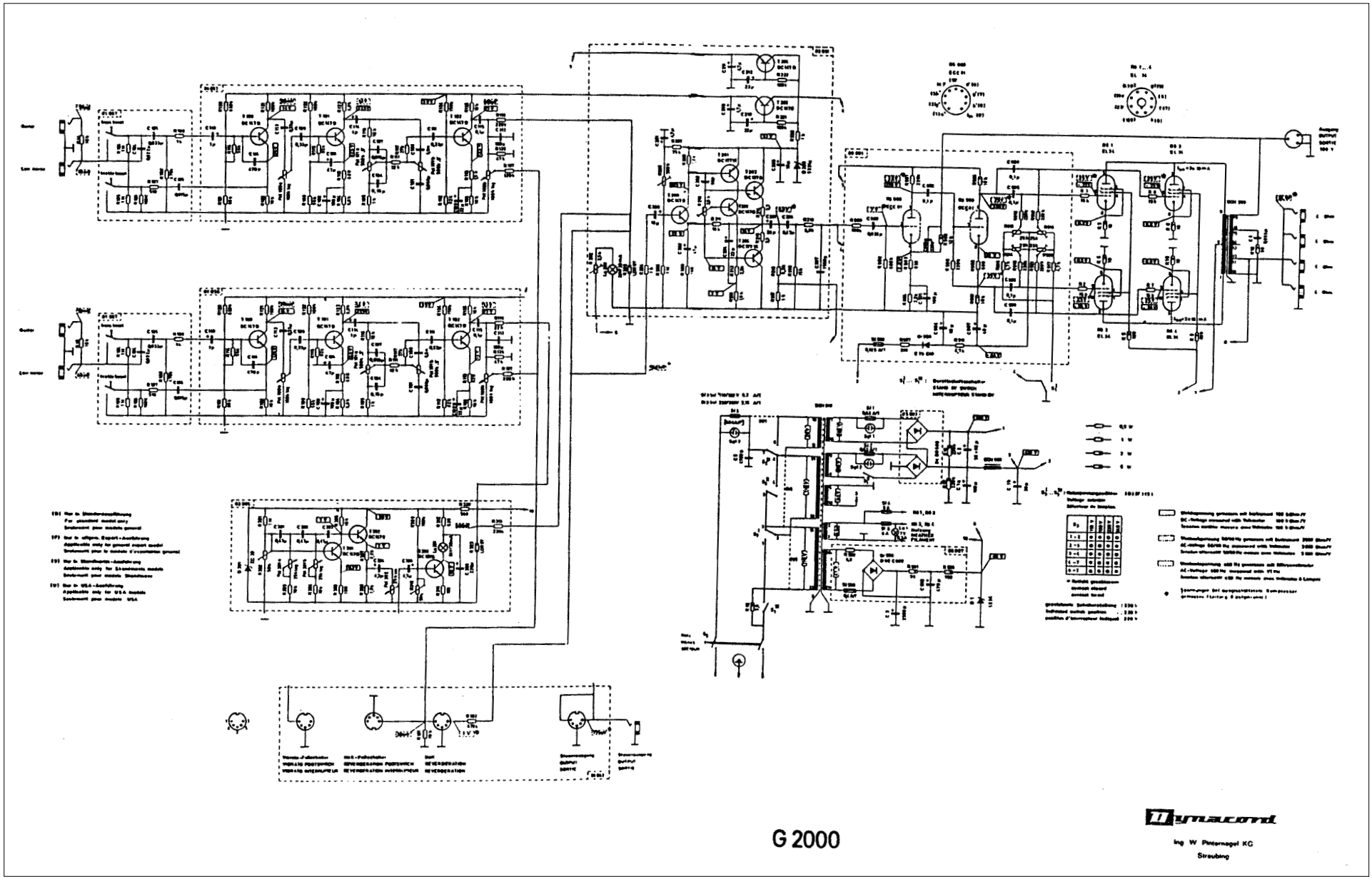
G 2000
Dynacord
Ing. W. Pintarnagel KG
Straubing

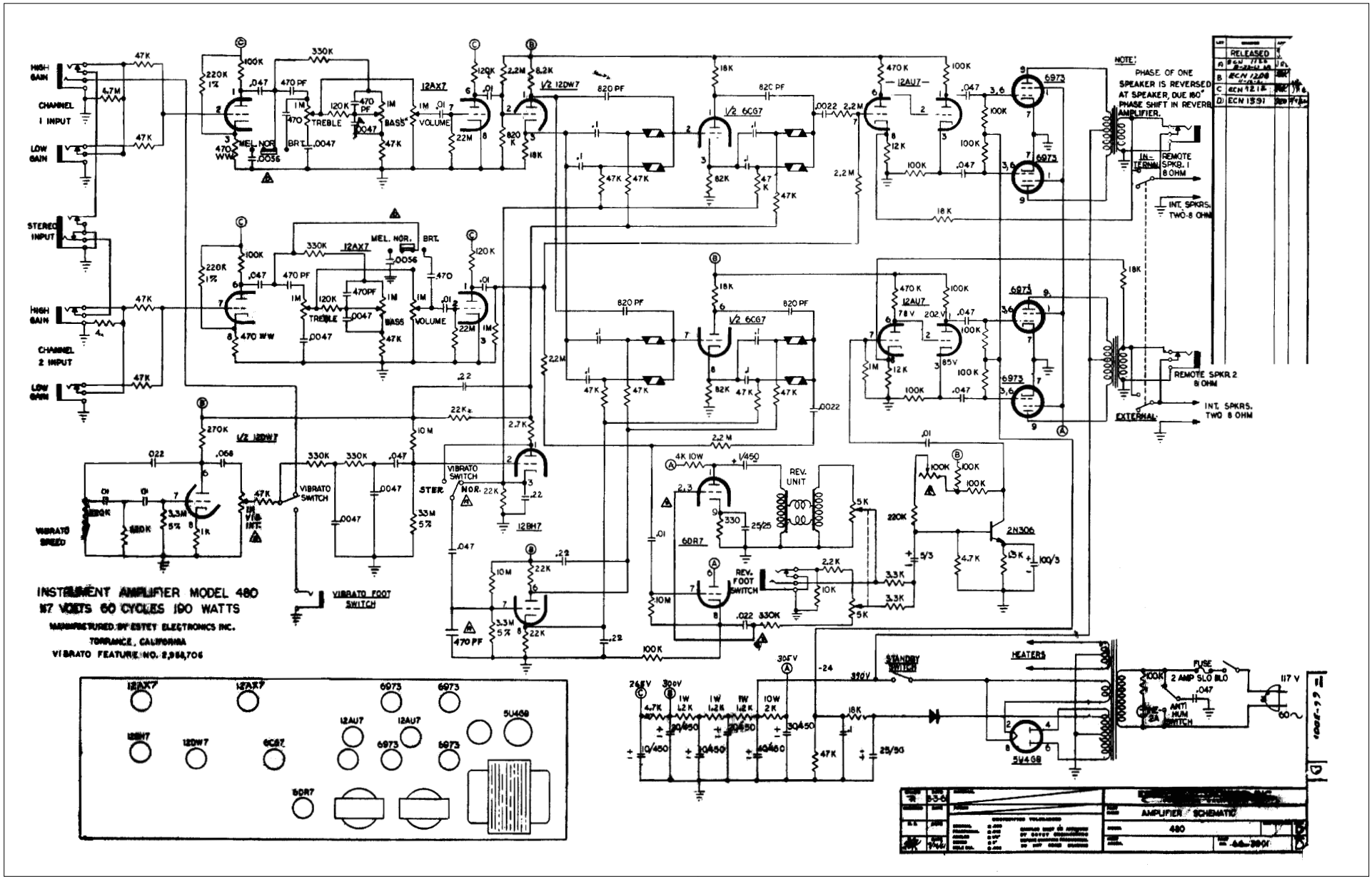
INSTRUMENT AMPLIFIER MODEL 480
117 VOLTS 60 CYCLES 190 WATTS
MANUFACTURED BY ESTEY ELECTRONICS INC.
TORRANCE, CALIFORNIA
VIBRATO FEATURE NO. 2,958,706
HIGH GAIN
CHANNEL 1 INPUT
LOW GAIN
STEREO INPUT
CHANNEL 2 INPUT
VIBRATO SPEED
VIBRATO SWITCH
VIBRATO FOOT SWITCH
TREBLE
BASS
VOLUME
MEL. NOR.
BRT.
REV. UNIT
REV. FOOT SWITCH
STANDBY SWITCH
HEATERS
FUSE
2 AMP SLO BLO
ANTI HUM SWITCH
117 V
INTERNAL
REMOTE SPKR. 1 8 OHM
INT. SPKRS. TWO-8 OHM
REMOTE SPKR. 2 8 OHM
EXTERNAL
NOTE:
PHASE OF ONE SPEAKER IS REVERSED AT SPEAKER, DUE 180° PHASE SHIFT IN REVERB AMPLIFIER.
RELEASED
AMPLIFIER SCHEMATIC
480

CONTROL CIRCUIT BOARD

Engl

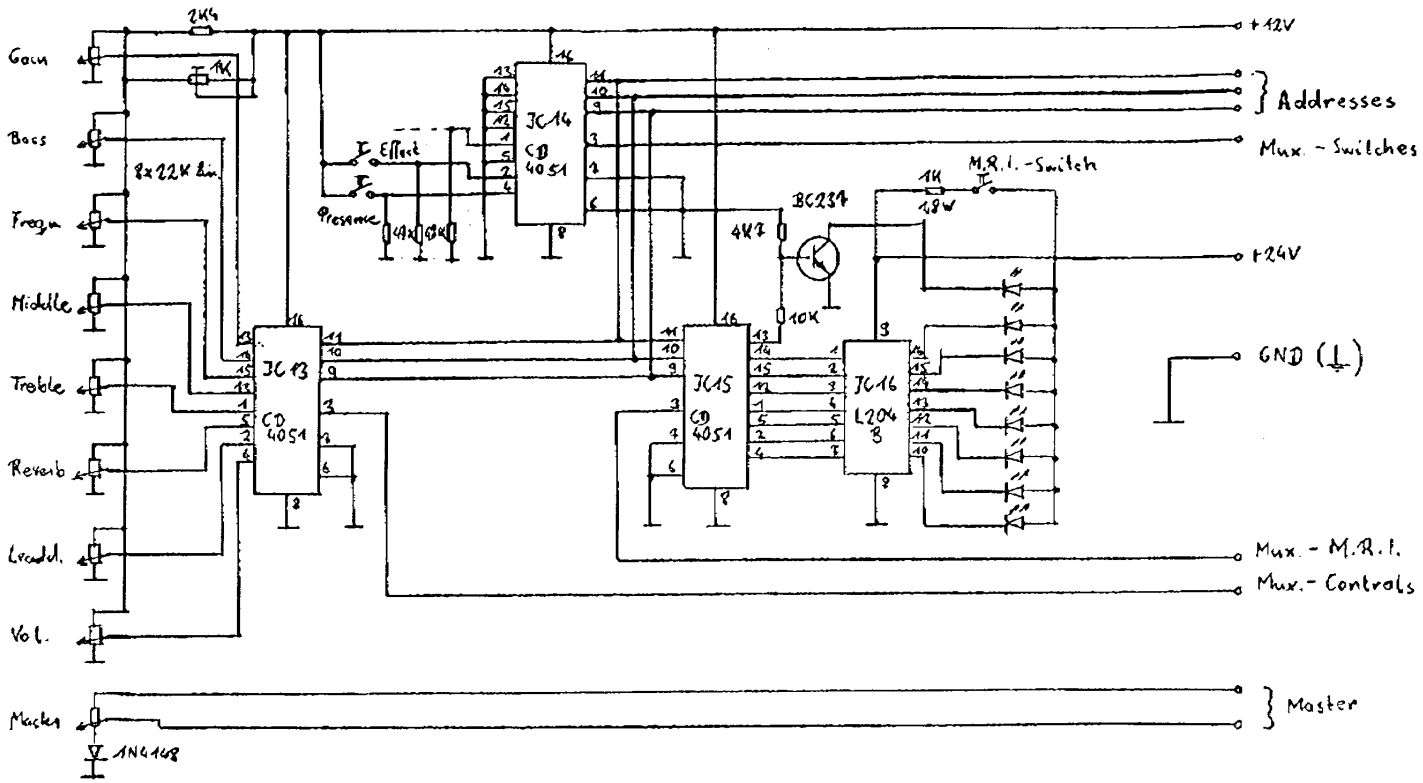

ENGL DIGITALAMPS

Developed:	
Drawn:	
Checked:	

Programmierbarer Röhrenamp, Pol.-Platt.

Programmable Tube-Amplifier, Contr.-Circ.-Board

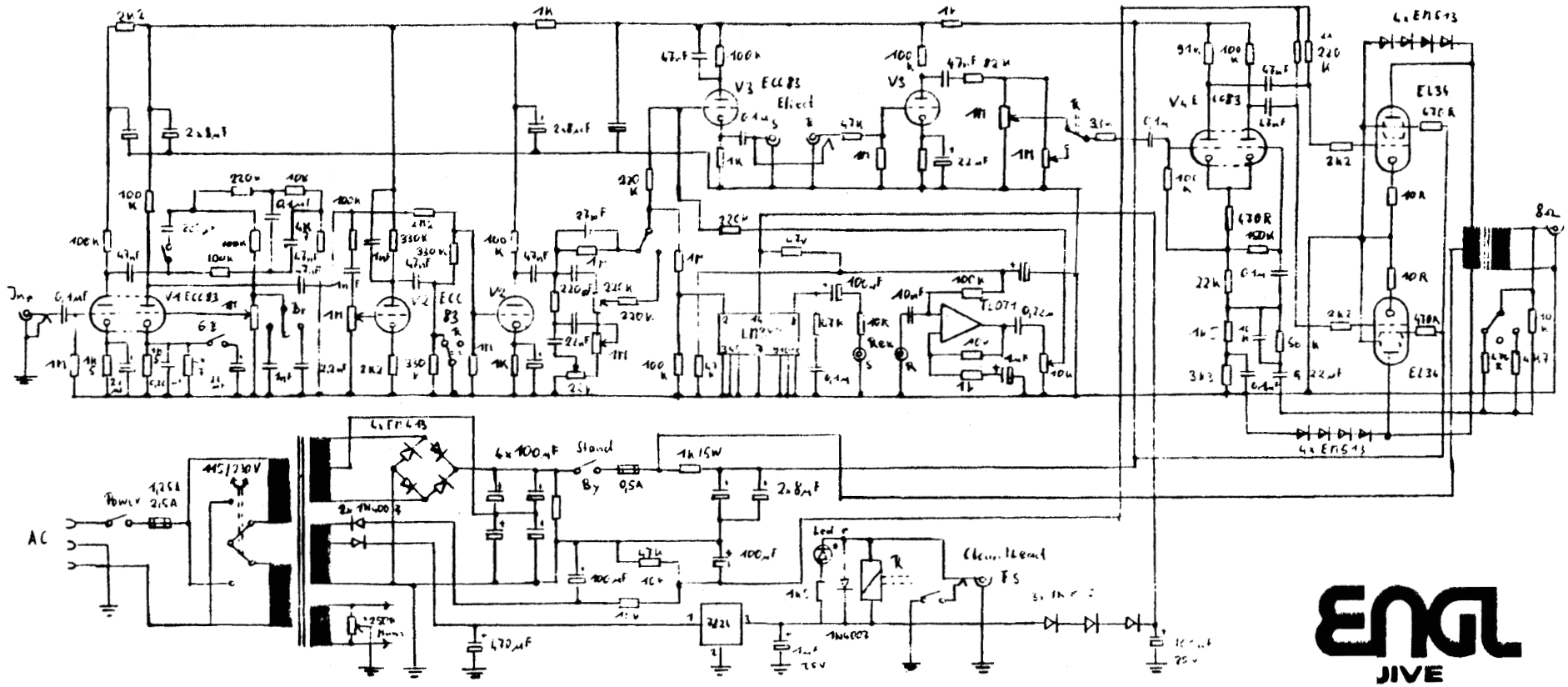

Technische Änderungen vorbehalten!

PCB LAYOUT

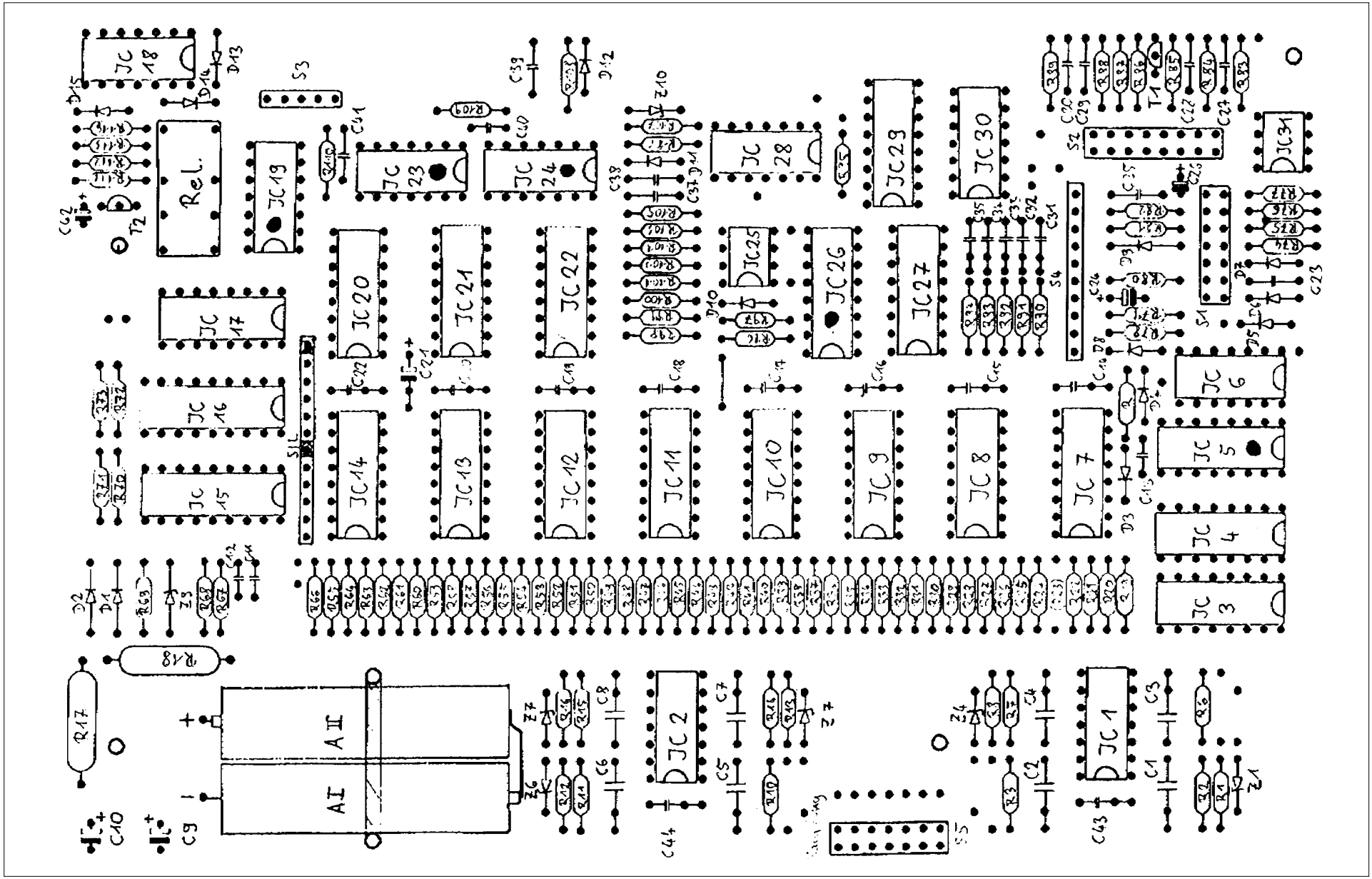
Rel.
JC 1
JC 2
JC 3
JC 4
JC 5
JC 6
JC 7
JC 8
JC 9
JC 10
JC 11
JC 12
JC 13
JC 14
JC 15
JC 16
JC 17
JC 18
JC 19
JC 20
JC 21
JC 22
JC 23
JC 24
JC 25
JC 26
JC 27
JC 28
JC 29
JC 30
JC 31
AI
AII
R17
R18
S1
S2
S3
S4
S5
T1
T2

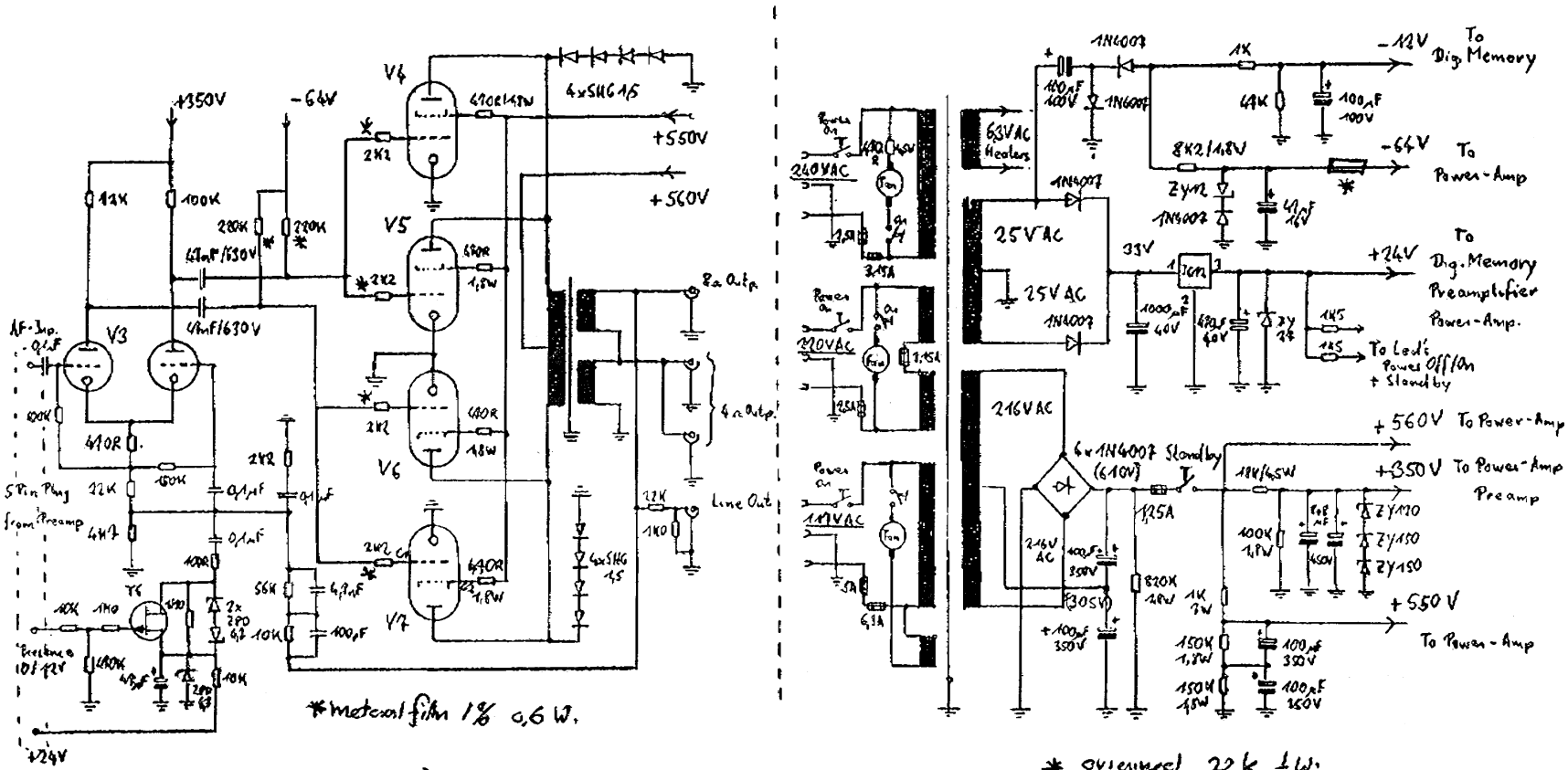

*metalfilm 1% 0,6 W.

T6 ⇒ BF245 (siehe BC264C!) (like BC264C!)

V3 ⇒ ECC83 (Preamp!)

V4-7 ⇒ 6L6GC

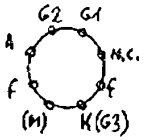

IC 12 ⇒ 7824 (siehe 7815! / like 7815!)

Fan ⇒ 230V 0,1A

Sicherungen/Fuses:

	extern	intern
240V	2,5AT	3,15AT
220V	2,5AT	3,15AT
117V	5AT	6,3AT

* original 22k. 1/4 W
inc. 18k 1/2 W

	Developed:	Engl + Langer
	Drawn:	Langer
	Checked:	Engl

Programmierbarer Röhrenverstärker, Endstufe + Netzteil
Programmable Tube-Amp, Power-Amp + Power-Supply

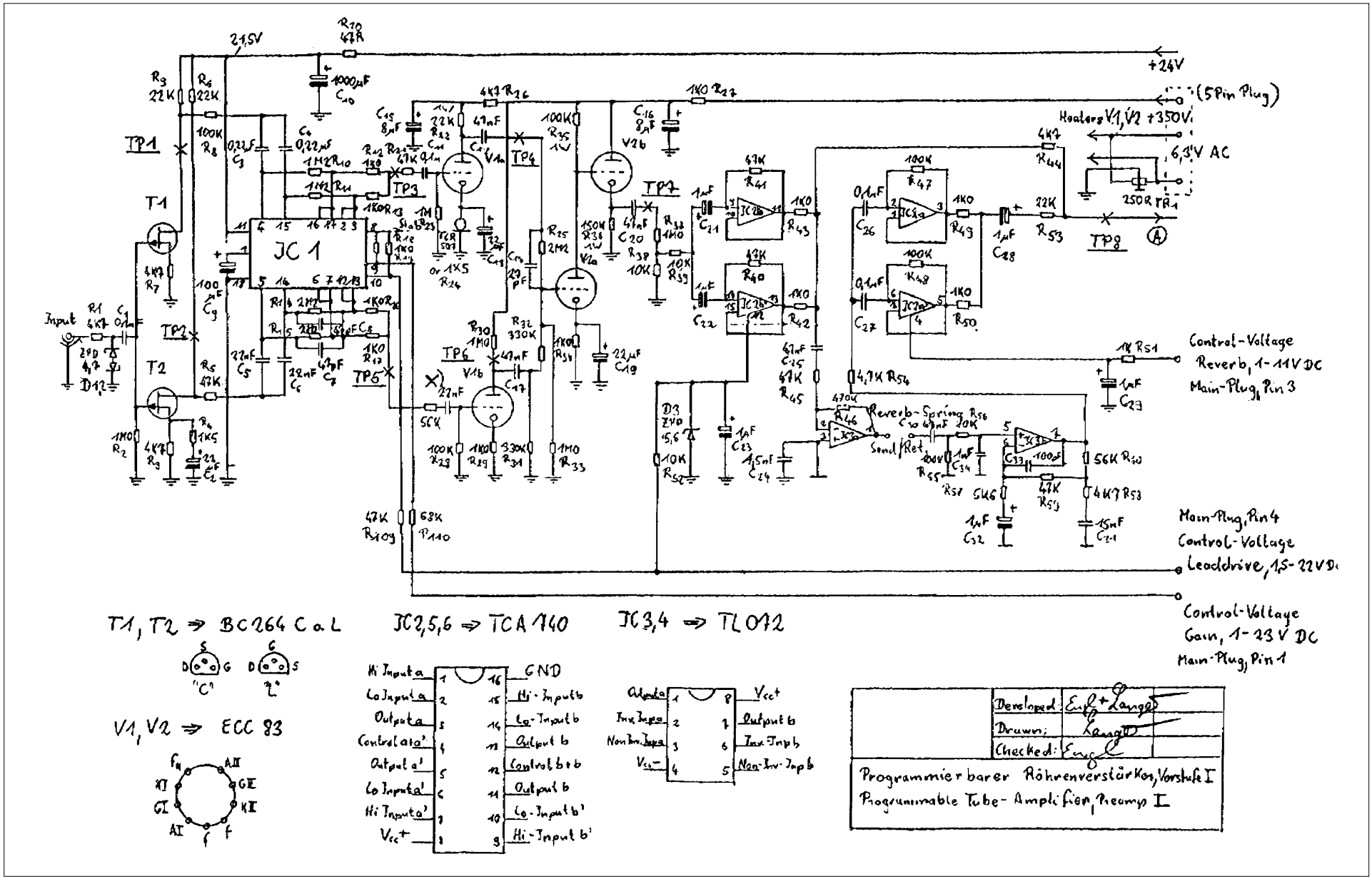
21,5V
+24V
(5Pin Plug)
Heaters V1, V2 +350V
6,3V AC
Input
JC 1
Control-Voltage
Reverb, 1-11V DC
Main-Plug, Pin 3
Reverb-Spring
Send/Ret
Main-Plug, Pin 4
Control-Voltage
Leaddrive, 1,5-22V DC
Control-Voltage
Gain, 1-23V DC
Main-Plug, Pin 1
T1, T2 ⇒ BC264 C a L
JC2,5,6 ⇒ TCA 140
JC3,4 ⇒ TL072
V1, V2 ⇒ ECC 83
GND
Vcc+
Vcc−
Developed:
Drawn:
Checked:
Programmierbarer Röhrenverstärker, Vorstufe I
Programmable Tube-Amplifier, Preamp I

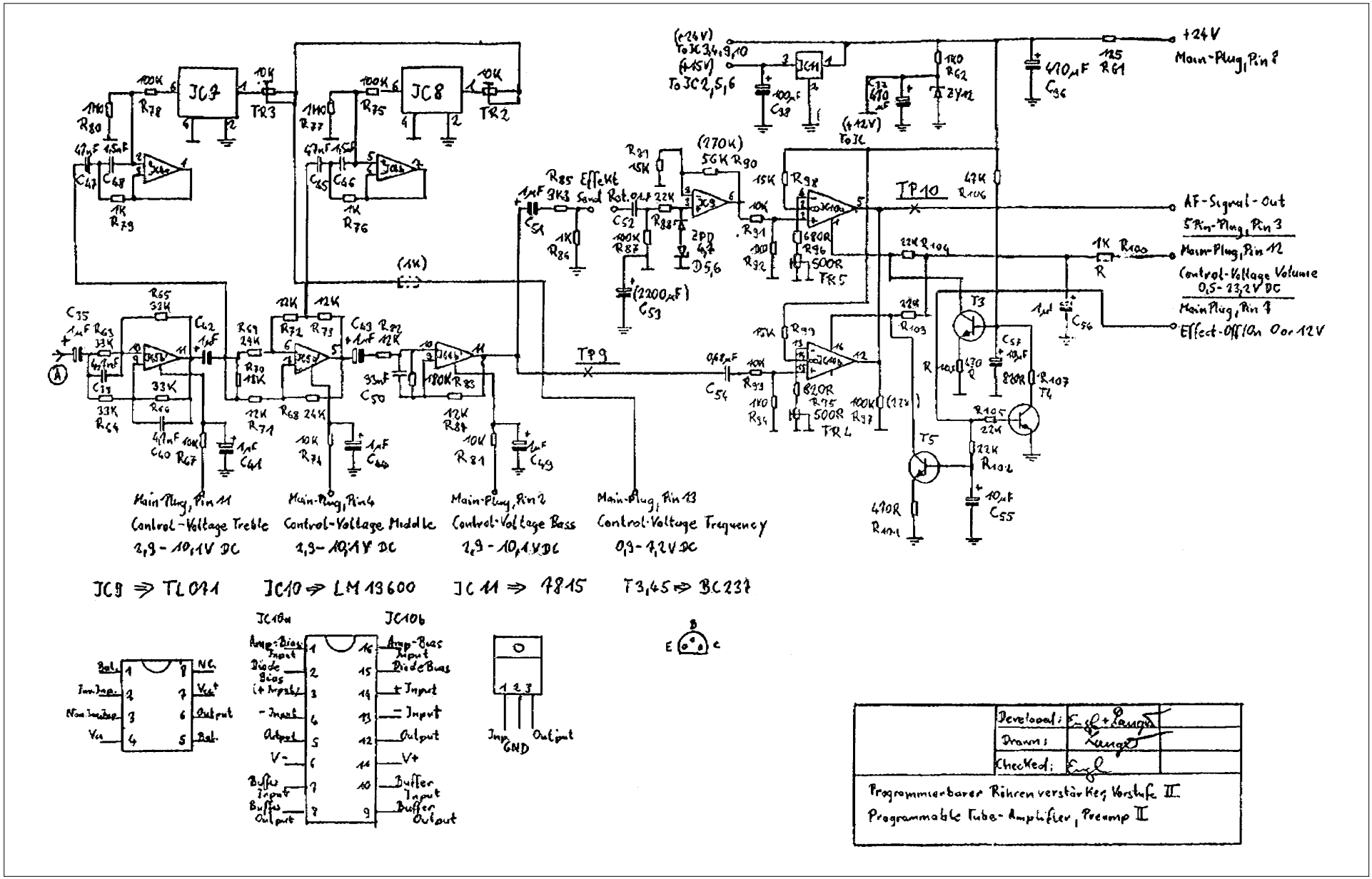
+24V
Main-Plug, Pin 8
AF-Signal-Out
5 Pin-Plug, Pin 3
Main-Plug, Pin 12
Control-Voltage Volume
0,5-23,2V DC
Main Plug, Pin 4
Effect-Off/On 0 or 12V
Main-Plug, Pin 11
Control-Voltage Treble
2,9-10,1V DC
Main-Plug, Pin 4
Control-Voltage Middle
2,9-10,1V DC
Main-Plug, Pin 2
Control-Voltage Bass
2,9-10,1V DC
Main-Plug, Pin 13
Control-Voltage Frequency
0,9-4,2V DC
JC9 ⇒ TL071
JC10 ⇒ LM 13600
JC11 ⇒ 7815
T3,4,5 ⇒ BC237
JC10a
JC10b
Bal.
Inv. Inp.
Non Inv. Inp.
Vcc
NC
Vcc+
Output
Bal.
Amp-Bias Input
Diode Bias (+ Input)
- Input
Output
V-
Buffer Input
Buffer Output
Amp-Bias Input
Diode Bias
+ Input
- Input
Output
V+
Buffer Input
Buffer Output
Inp
GND
Output
B
E
C
Developed:
Drawn:
Checked:
Programmierbarer Röhrenverstärker Vorstufe II
Programmable Tube-Amplifier, Preamp II

EA-4T, 4TL, & 6T

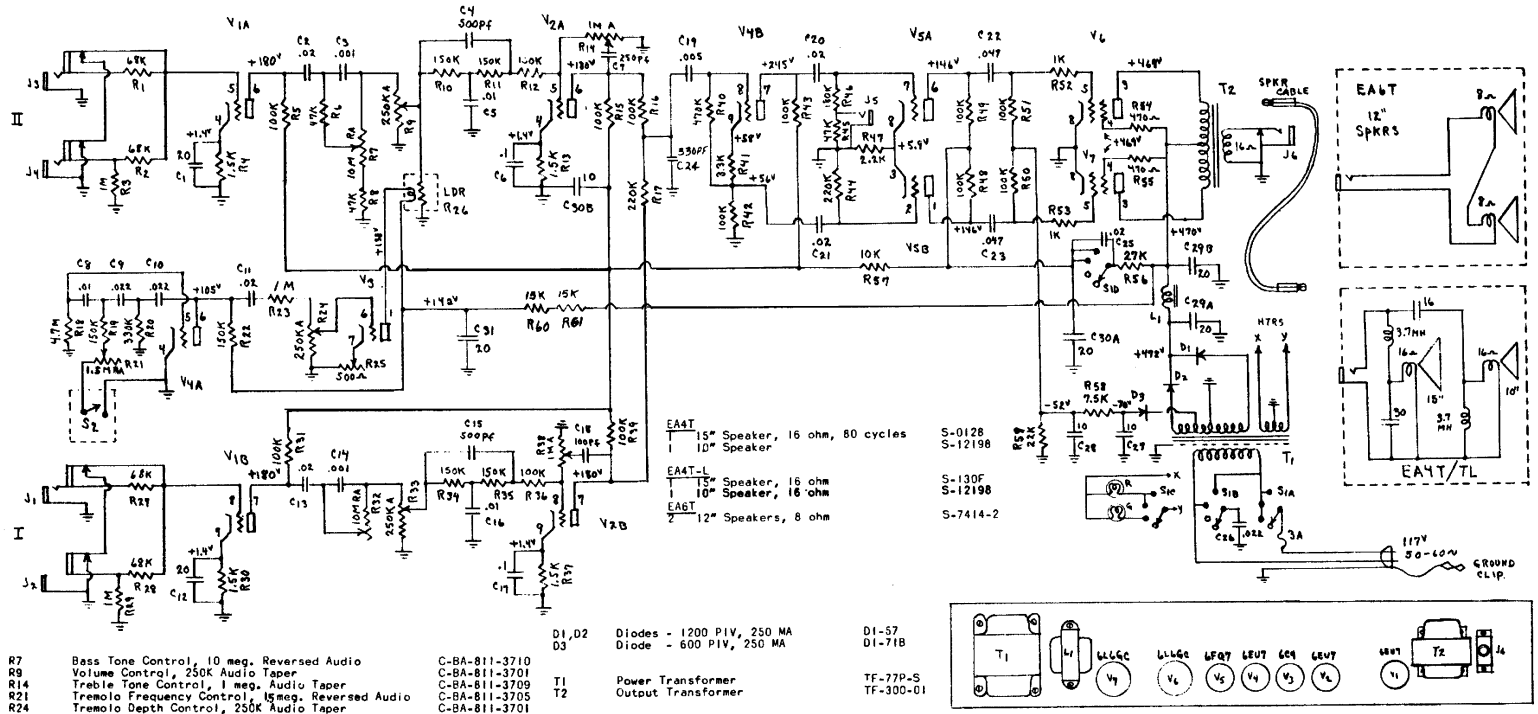

R7	Bass Tone Control, 10 meg. Reversed Audio	C-BA-811-3710	D1,D2	Diodes - 1200 PIV, 250 MA	D1-57
R9	Volume Control, 250K Audio Taper	C-BA-811-3701	D3	Diode - 600 PIV, 250 MA	D1-71B
R14	Treble Tone Control, 1 meg. Audio Taper	C-BA-811-3709	T1	Power Transformer	TF-77P-S
R21	Tremolo Frequency Control, 15meg. Reversed Audio	C-BA-811-3705	T2	Output Transformer	TF-300-01
R24	Tremolo Depth Control, 250K Audio Taper	C-BA-811-3701			
R25	LDR Gain Control, 500 ohm/200 ohm min.	C-B-23391	L1	Filter Choke	TF-3021H
R32	Bass Tone Control, 10 meg. Reversed Audio	C-BA-811-3710			
R33	Volume Control, 250K Audio Taper	C-BA-811-3701	S1	Switch, Power, Standby, Polarity	SW-78
R38	Treble Tone Control, 1 meg. Audio Taper	C-BA-811-3709	S2	Switch, Tremolo	
R26	Light Dependent Resistor Lamp Assembly	RE-LDR-430G			

FUSE

The fuse used in this Amplifier is a type 3AG of three amperes rating.

DO NOT USE FUSES OF HIGHER RATING

SERVICE

If the amplifier is in need of servicing, it should be taken to a reliable radio man. The electrical diagram in this folder should be shown the repairman to assist him in servicing the amplifier.

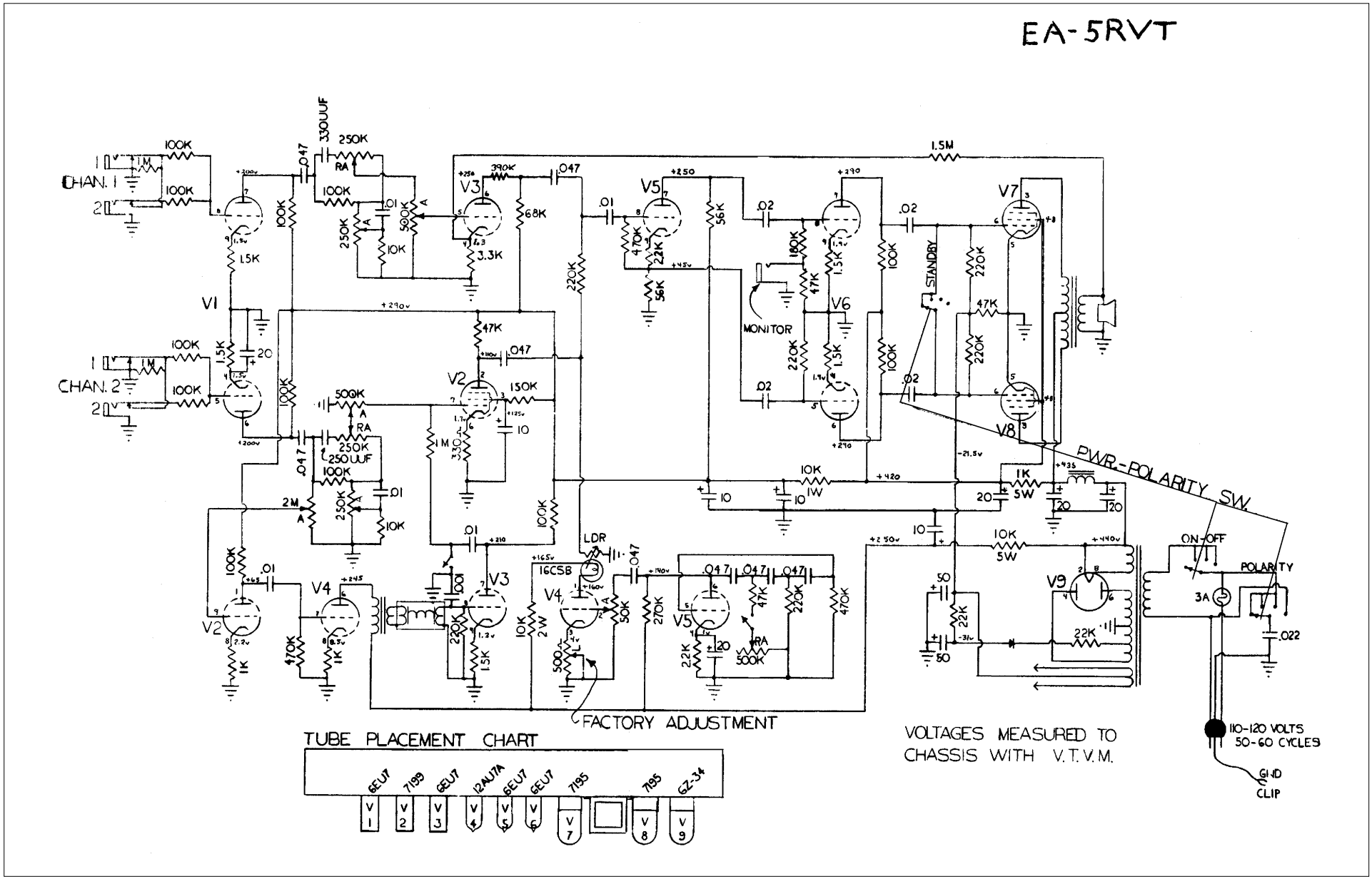
EA-5RVT
CHAN. 1
CHAN. 2
V1
V2
V3
V4
V5
V6
V7
V8
V9
MONITOR
STANDBY
PWR.-POLARITY SW.
ON-OFF
POLARITY
3A
LDR
16CSB
FACTORY ADJUSTMENT
TUBE PLACEMENT CHART
6EU7
7199
6EU7
12AU7A
6EU7
6EU7
7195
7195
GZ-34
VOLTAGES MEASURED TO CHASSIS WITH V.T.V.M.
110-120 VOLTS 50-60 CYCLES
GND CLIP

THIS SCHEMATIC FOR AMPS STARTED IN 1963

Cable Color Code for EA7/8P INST. CABLE

1 - GREEN — SHIELDED
2 - Red — SHIELDED
3 - yellow
4 - Blue
5 - Brown — SHIELDED
6 - SHIELD

EA-7P

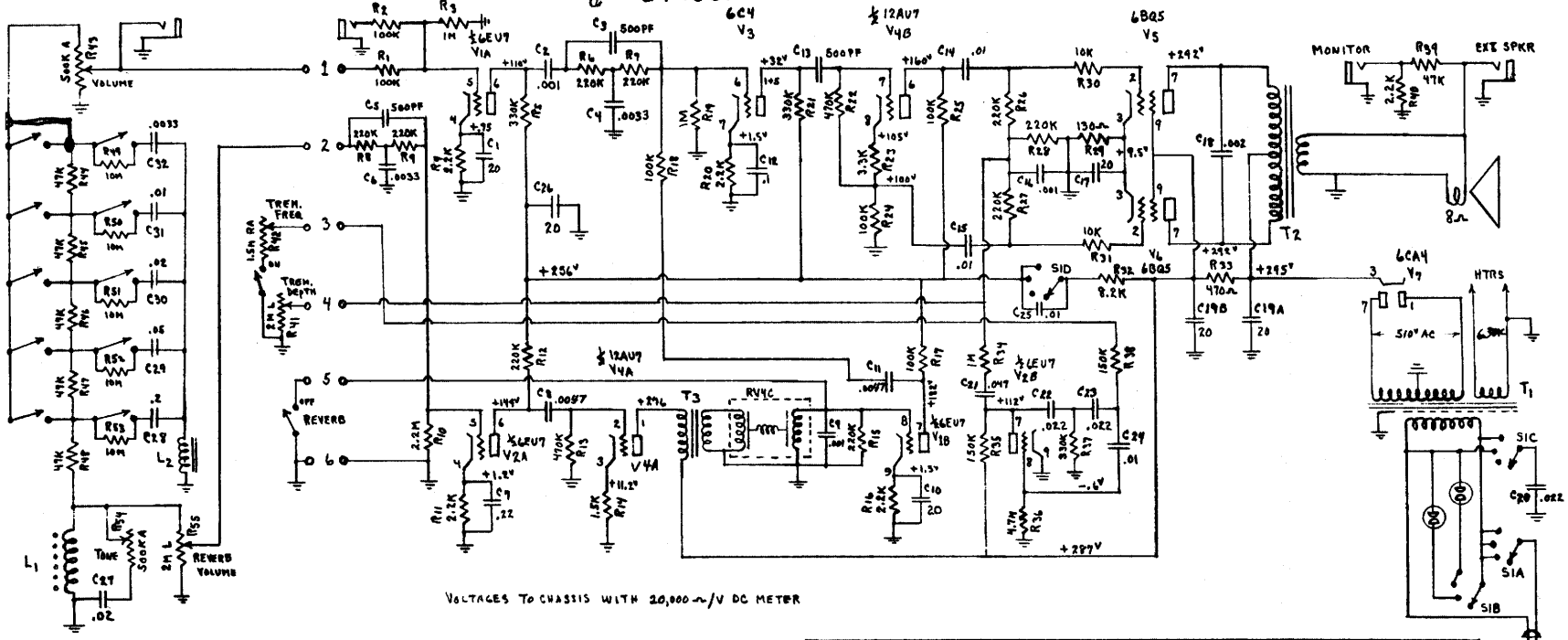

VOLTAGES TO CHASSIS WITH 20,000 Ω/V DC METER

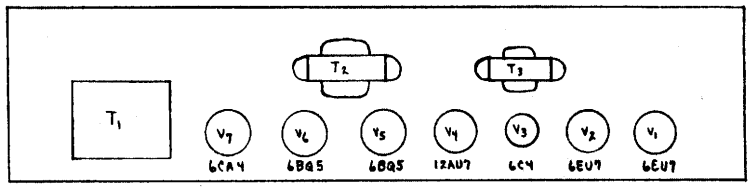

L1	Pickup	CPA-1023	R41	TREMOLO DEPTH CONTROL	2M LINEAR	CBA 811-3708
L2	CHOKE	GA900C-1	R42	" FREQ "	1.5M REVERSED	CBA 811-3711
T1	POWER XFMR	TF 8A-P	R43	INSTRUMENT VOL "	500K AUDIO	CBA 811-3707
T2	OUTPUT "	TF 18-01	R54	" TONE "	500K "	CBA 811-3707
T3	DRIVER "	TF E6400	R55	REVERB. VOL "	2M LINEAR	CBA 811-3708
S1	4 POLE, 4 POS	SW 78				
REVERB UNIT		RV4C				

CAPACITORS IN MFD
RESISTORS IN OHMS K = 1000, M = 1000000

EA-8P

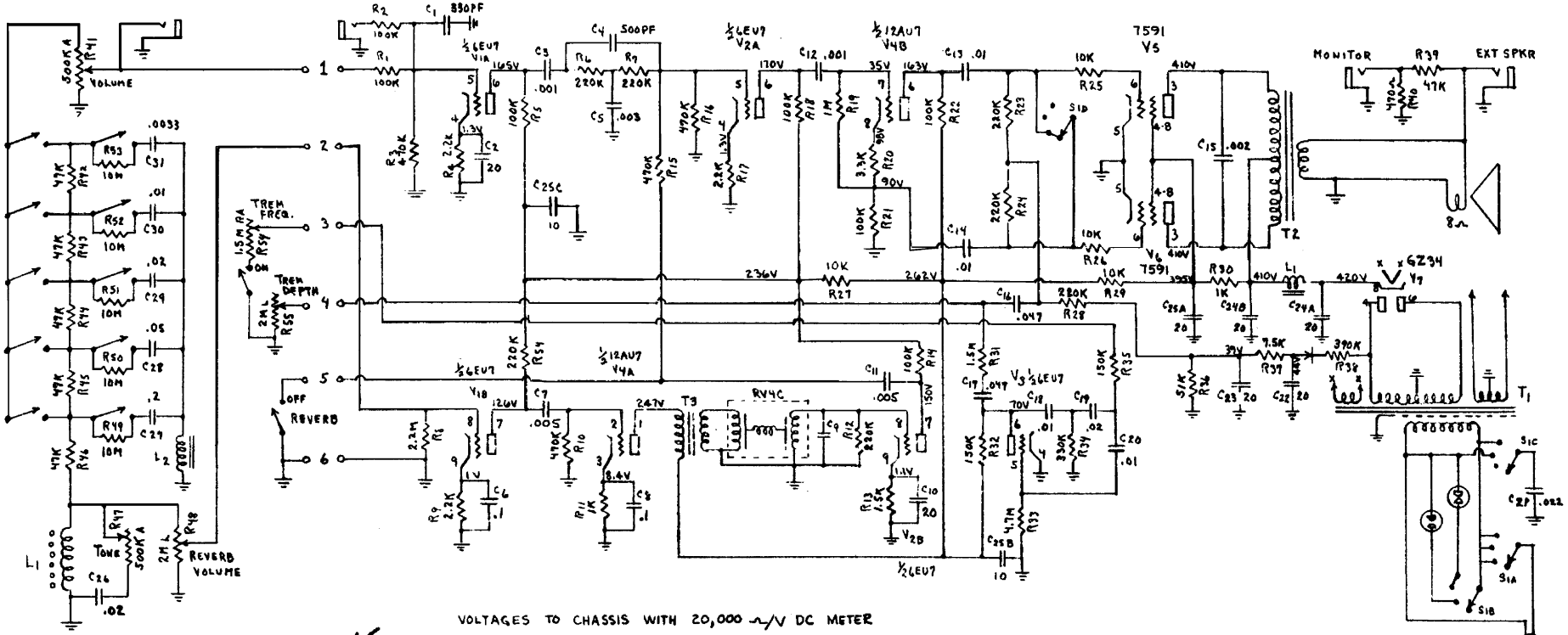

VOLTAGES TO CHASSIS WITH 20,000 Ω/V DC METER

L1	PICKUP	CPA-1023
L2	CHOKE	GA90C-1
T1	POWER XFMR	TF60P
T2	OUTPUT XFMR	TF-P6417
T3	DRIVER XFMR	TF E6400
S1	4 POLE, 4 POS SWITCH	SW 78
REVERB UNIT		RV4C

R41	INSTRUMENT VOL CONTROL	500K	AUDIO	CBA 811-3707
R47	INSTRUMENT TONE CONTROL	500K	AUDIO	CBA 811-3707
R48	REVERB VOL CONTROL	2M	LINEAR	CBA 811-3708
R54	TREMOLO FREQ CONTROL	1.5M	REVERSED	CBA 811-3711
R55	TREMOLO DEPTH CONTROL	2M	LINEAR	CBA 811-3708

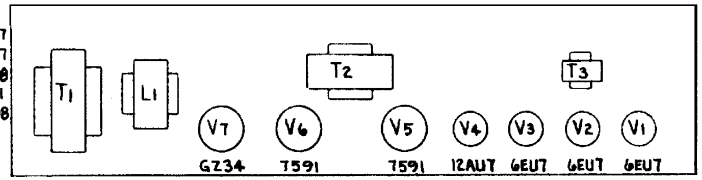

CAPACITORS IN MFD
RESISTORS IN OHMS K = 1,000 ; M = 1,000,000

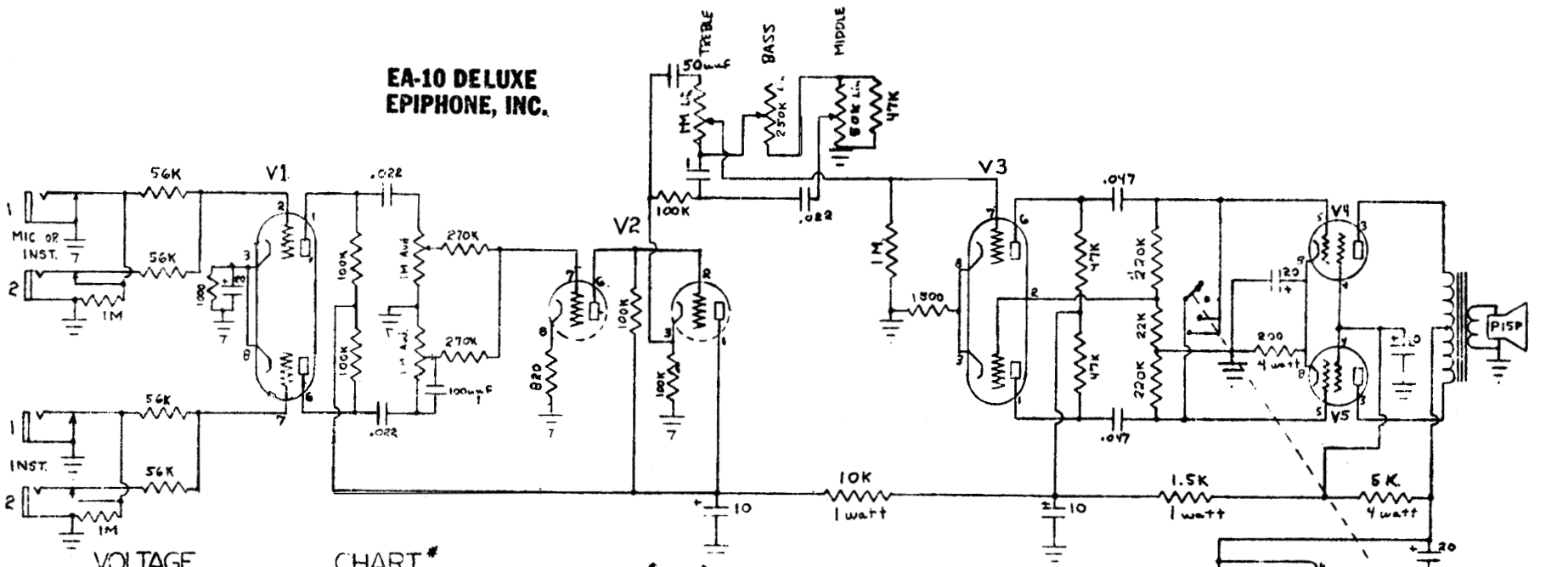

VOLTAGE CHART*

TUBE No.	TUBE TYPE	PIN 1	PIN 2	PIN 3	PIN 4	PIN 6	PIN 7	PIN 8
V1	12AX7	165	0	1.3	—	165	0	1.3
V2	12AX7	235	140	140	--	140	0	.75
V3	12AU7	170	0	8.5	—	170	0	8.5
V4-5	6L6GB	GND.	---	345	286	--	—	21.5
V6	GZ 34	GND	353	---	300 RMS	300 RMS	—	—

* ALL DC. VOLTAGES MEASURED TO CHASSIS WITH 20,000 Ω/V METER.

Deluxe EPIPHONE

TUBE PLACEMENT CHART

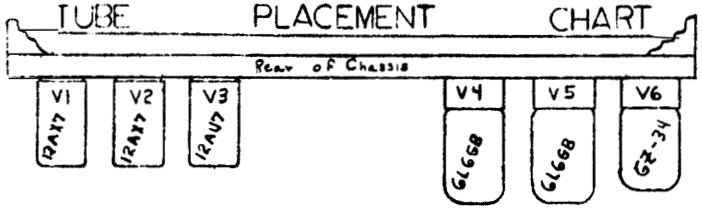

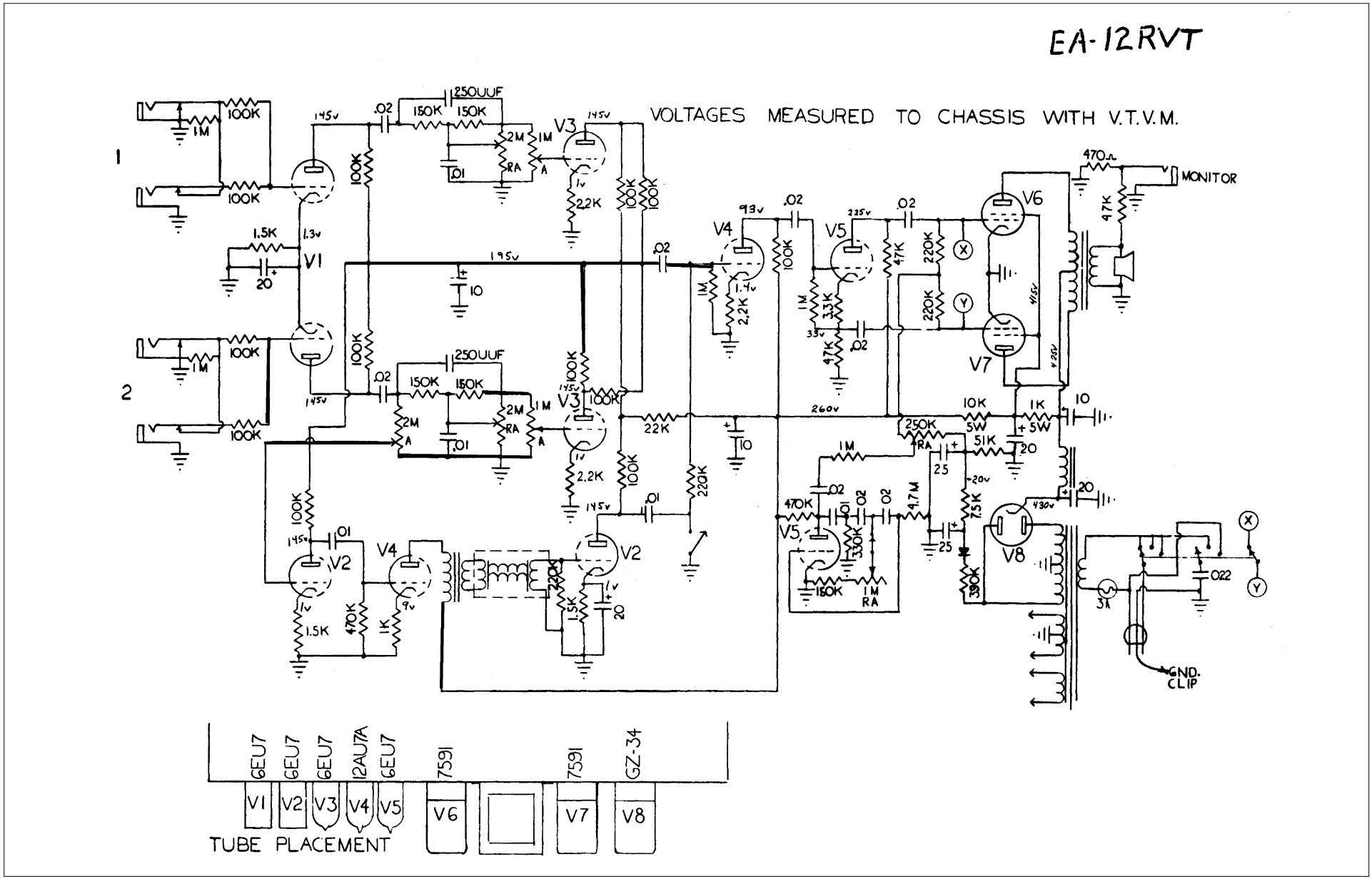
EA-12RVT
VOLTAGES MEASURED TO CHASSIS WITH V.T.V.M.
MONITOR
GND. CLIP
TUBE PLACEMENT
6EU7
6EU7
6EU7
12AU7A
6EU7
7591
7591
GZ-34
V1
V2
V3
V4
V5
V6
V7
V8

EA-15RVT

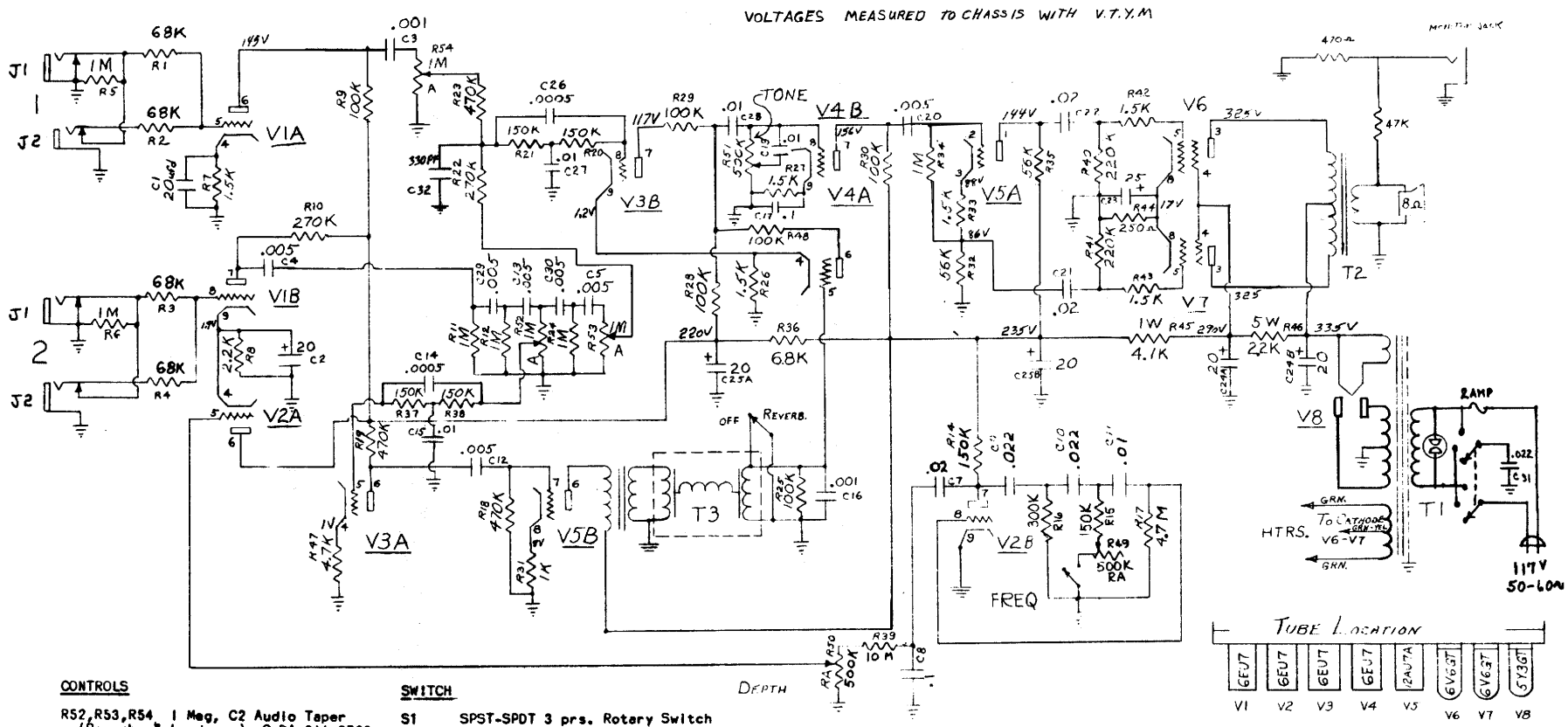

CONTROLS

R52,R53,R54 1 Meg, C2 Audio Taper (Reverb. & Loudness) C-BA-811-3709
R51 (Tone) 500K, C2 Audio Taper C-BA-811-3707
R50 500K, C3 Reversed-Audio (Depth) C-BA-811-3704
R49 500K, C3 Reversed Audio (Frequency) C-BA-811-3706

SWITCH

S1 SPST-SPDT 3 prs. Rotary Switch SW-899

SPEAKER

S-7334-2 C15R 15" Speaker with 90 cycle resonance cone. Jensen

TRANSFORMERS

T1	Power Transformer	TF-23-P
T2	Output Transformer	TF-18-01
T3	Reverb. Transformer	TF-E-6400

EA16 RVT

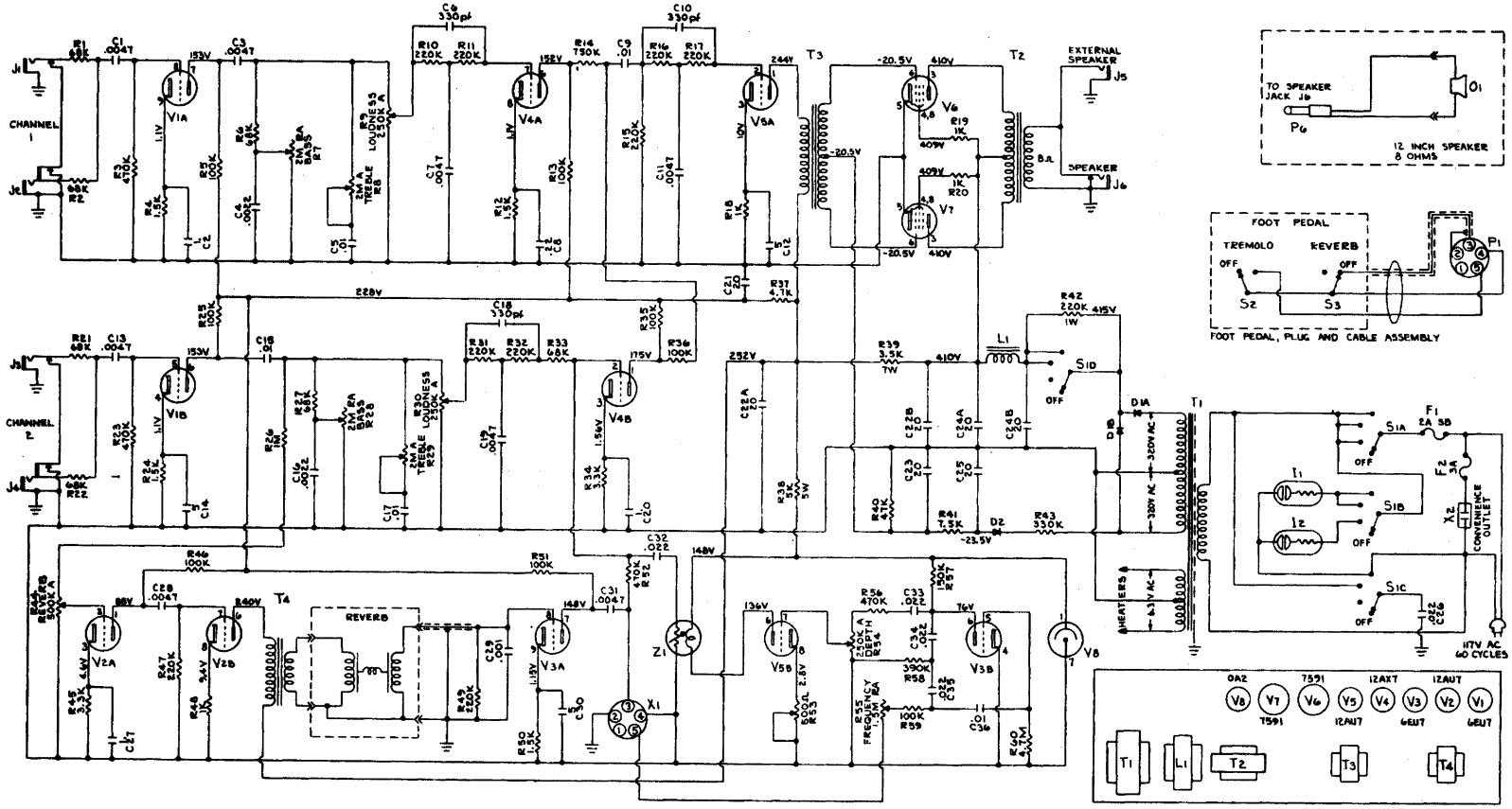

T1	Power Transformer	TF-104P	D1A,B	Diode - 1200 PIV DI-57
T2	Output Transformer	TF-P6417	D2	Diode - 600 PIV DI-71B
T3	PP Driver Transformer	TF-1001D-1		
T4	Reverb Transformer	TF-E6400	CN-78PCG-5	Foot Pedal Socket
L1	Filter Choke	TF-3021H	CN-303	AC Convenience Outlet
S1A,B,C,D	Switch - off,standby-on-on	SW-78A-1		
S2,S3	Switches - SPST	SW-82403		
I1	PL-37R Pilot Light (Red)			
I2	PL-38A Pilot Light (Amber)			
R9,R30,R54	Control - 250K Audio	CBA-4008		
R8,R29	Control - 2 meg, audio	CBA-811-3702-1		
R44	Control - 500K Audio	CBA-4007		
R55	Control - 1.5 meg, RA	CBA-811-3711-1		
R7,R28	Control - 1 meg, audio	CBA-811-3709-1		

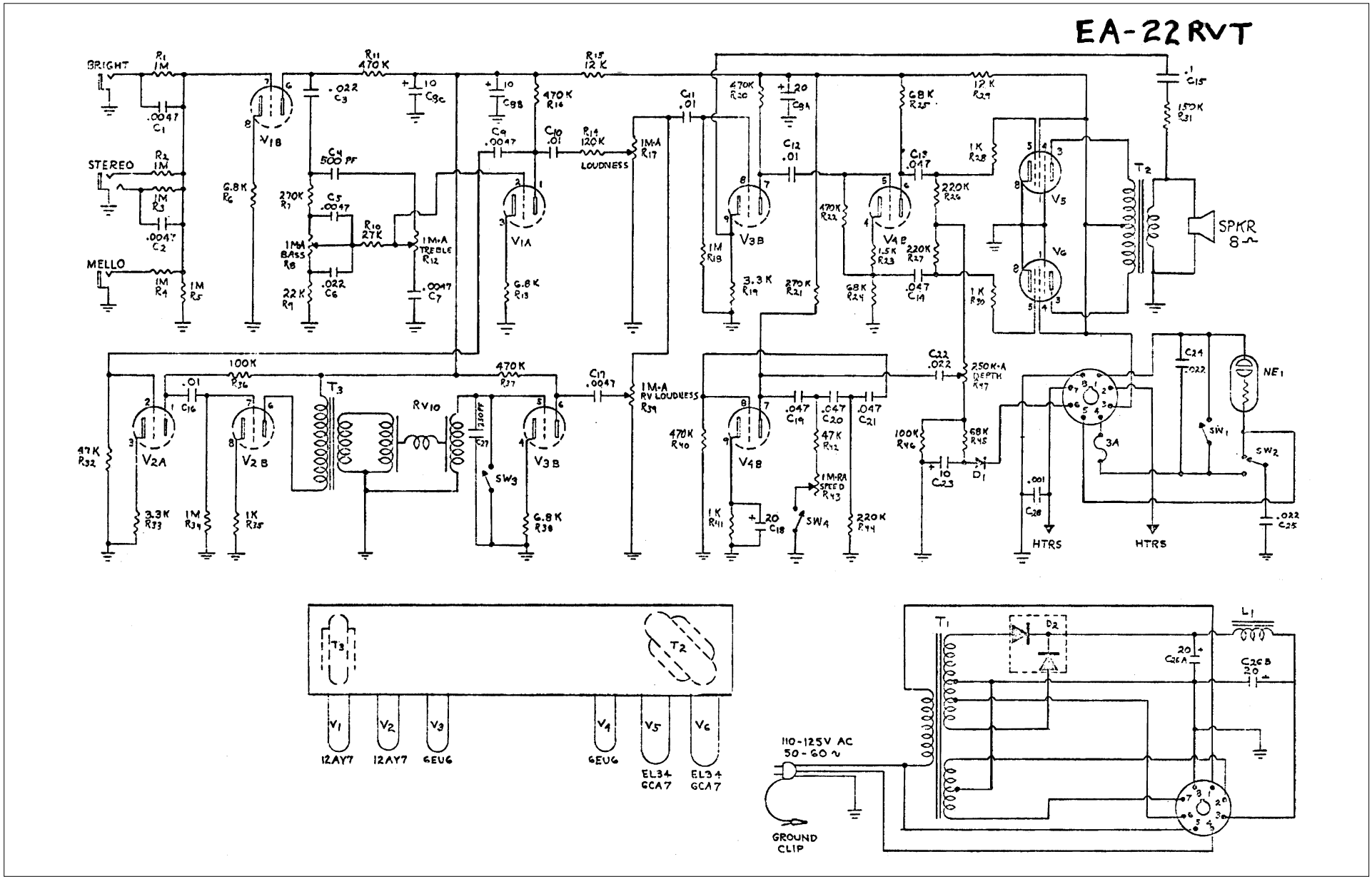
EA-22RVT
BRIGHT
STEREO
MELLO
LOUDNESS
TREBLE
BASS
RV LOUDNESS
DEPTH
SPEED
SPKR 8Ω
HTRS
110-125V AC 50-60 ~
GROUND CLIP
12AY7
12AY7
6EU6
6EU6
EL34 6CA7
EL34 6CA7

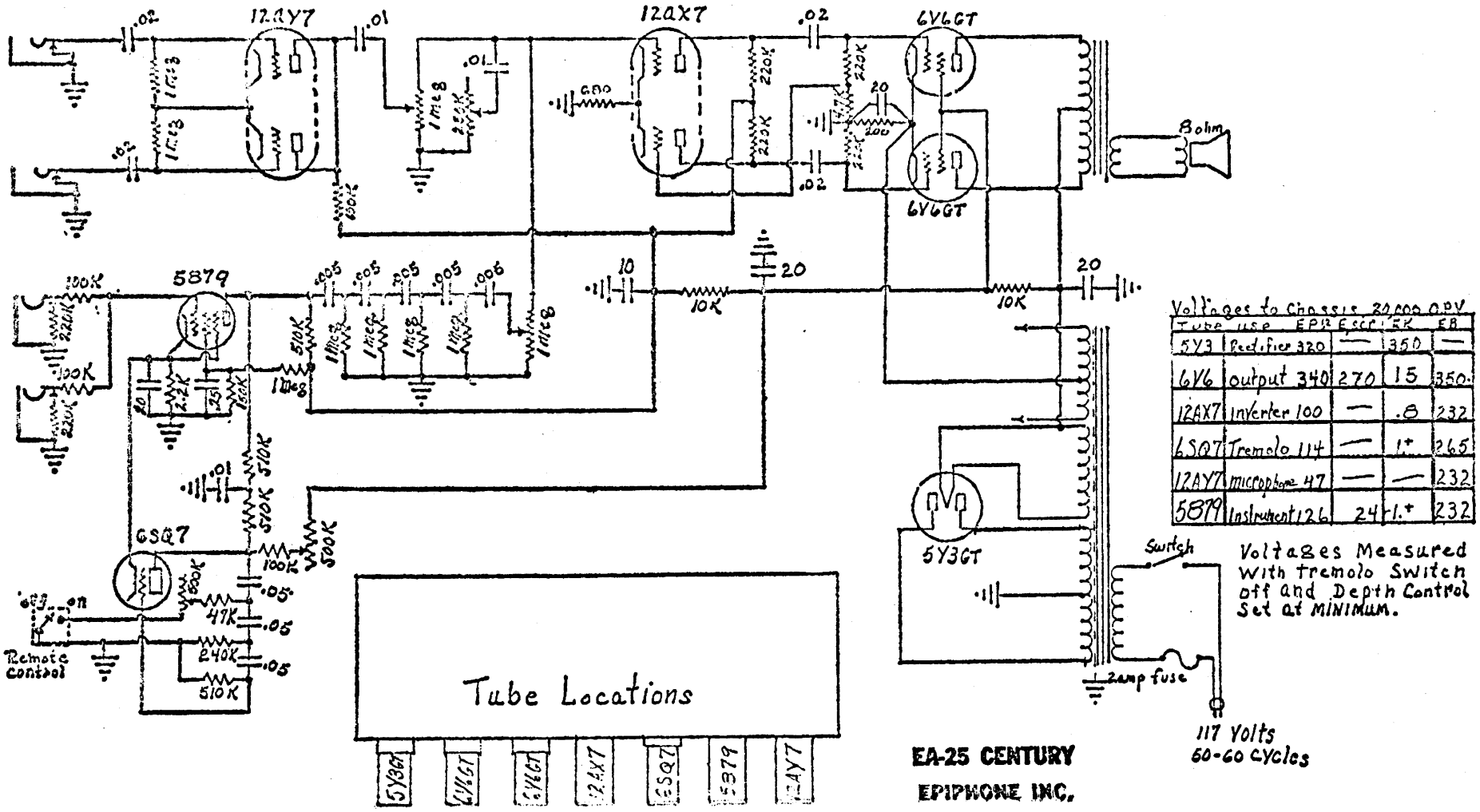

Voltages to Chassis 20,000 OPV

Tube	use	EP	ESCR	EK	EB
5Y3	Rectifier 320	—		350	—
6V6	output 340	270		15	350
12AX7	inverter 100	—		.8	232
6SQ7	Tremolo 114	—		1+	265
12AY7	microphone 47	—		—	232
5879	Instrument 126	24		1.+	232

Voltages Measured with tremolo Switch off and Depth Control Set at MINIMUM.

EA26-RVT

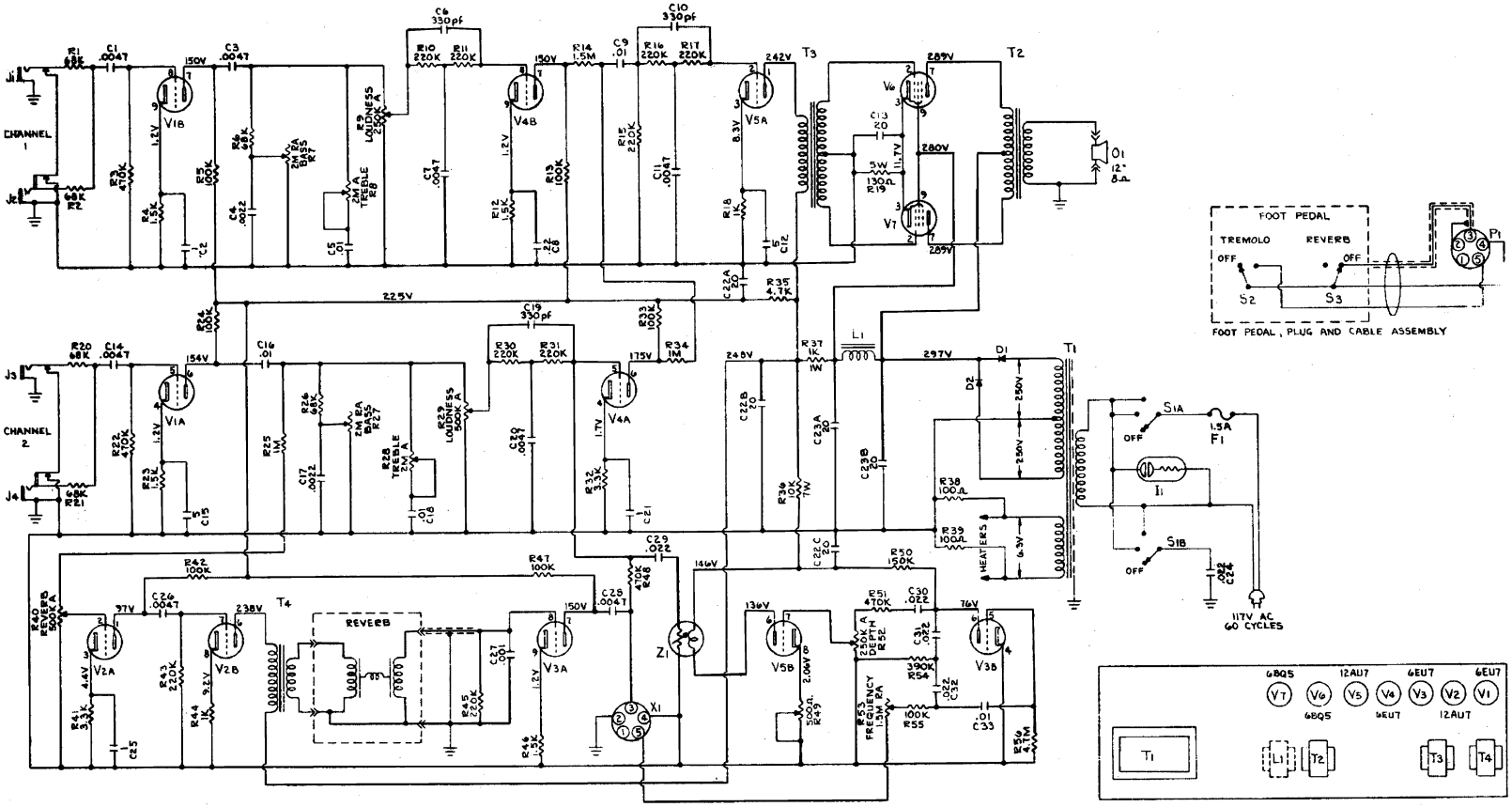

T1	TF-105T-1	Power Transformer
T2	TF-504-C	Output Transformer
T3	TF-1001D-1	PP Driver Transformer
T4	TF-E404	Reverb Transformer
L1	TF-1003-C	Filter Choke
S1A,B	SW-899-1	Switch - SPST Rotary
S2,S3	SW-8204	Switches - SPST
I1	PL-35R	Pilot Light (Neon) w/clip
X1	CN-78PCG-5	Foot Pedal Socket
P1	CN-91MPM-5L	Foot Pedal Plug
D1,D2	DI-404	Diode - 800 PIV

R9,R52	CBA-4008	Control - 250K, Audio (Loudness & Depth)
R8,R28	CBA-811-3702-1	Control - 2 meg, Audio (Treble)
R29,R40	CBA-4007	Control - 500K, Audio (Loudness & Reverb)
R53	CBA-311-3711-1	Control - 1.5 meg, RA (Frequency)
R7,R27	CBA-812-222-1	Control - 2 meg, RA (Bass)
R49	CS-23351	Control - 500 ohm, WW

EA28-RVT

R2,R3	Loudness & Reverb. Control, 2 meg audio taper	C-BA-811-3702
R4	Depth Control, 250K reversed audio	C-BA-811-3704
R5	Frequency Control, 500K reversed audio	C-BA-811-3706
R1	Tone Control, 1 meg audio taper	C-BA-811-3709

T1	Output Transformer	TF-18-01
T2	Power Transformer	TF-18P
T3	Reverberation Transformer	TF-E-6400
S1	Toggle Switch (on-off) with 2 nuts	SW-80994
(1)	S-20009 12" Speaker	S-20009

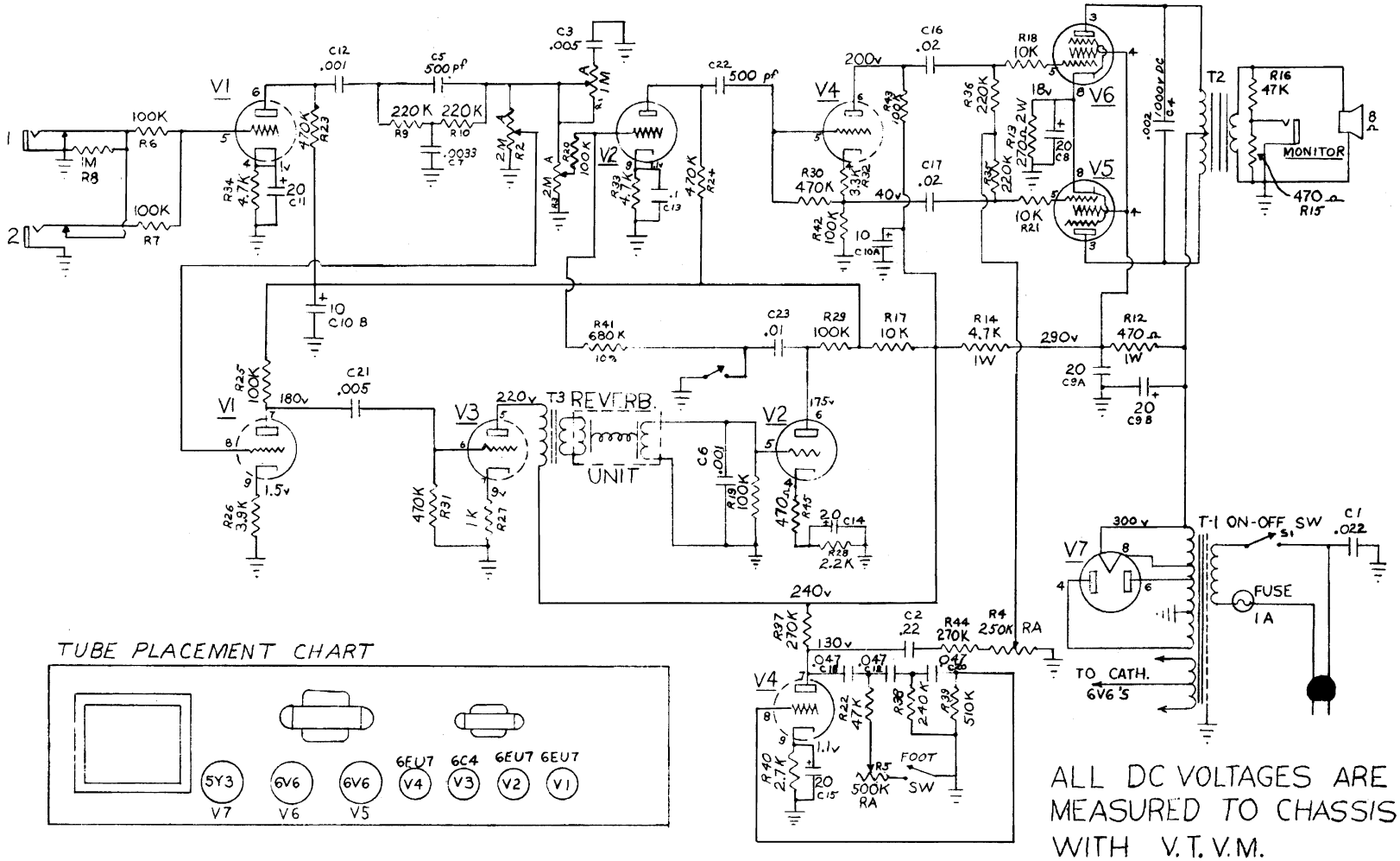

TUBE PLACEMENT CHART

ALL DC VOLTAGES ARE MEASURED TO CHASSIS WITH V.T.V.M.

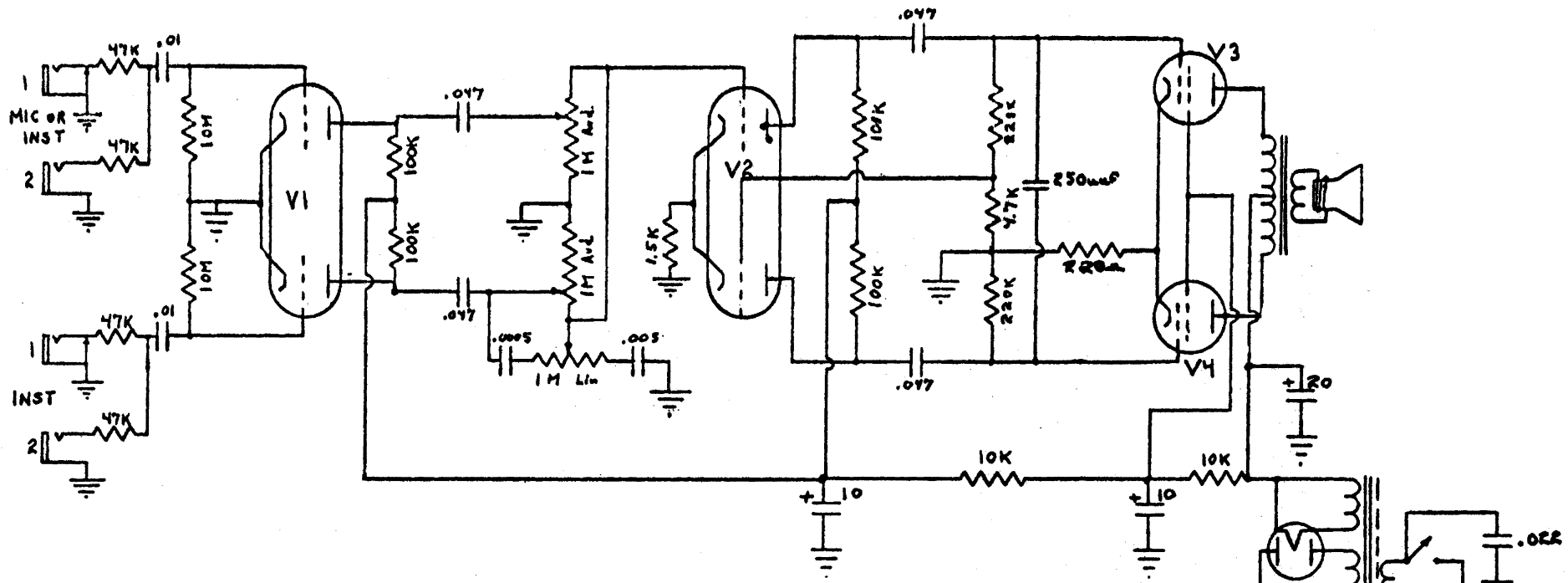

TUBE LOCATION

V1 V2 V3 V4 V5

12AX7 12AX7 6V6 6V6 5Y3

Tube Type	E_p	E_{sg}	E_g	E_K
V1 12AX7	120	—	-.65	0
V2 12AX7	170	—	0	1.6
V3 6V6	338	260	0	17.5
V4 6V6	338	260	0	17.5
V5 5Y3	320 RMS	—	—	345

DC Voltages to chassis with 11 meg VTVM

EA-30 TRIUMPH
EPIPHONE, INC.

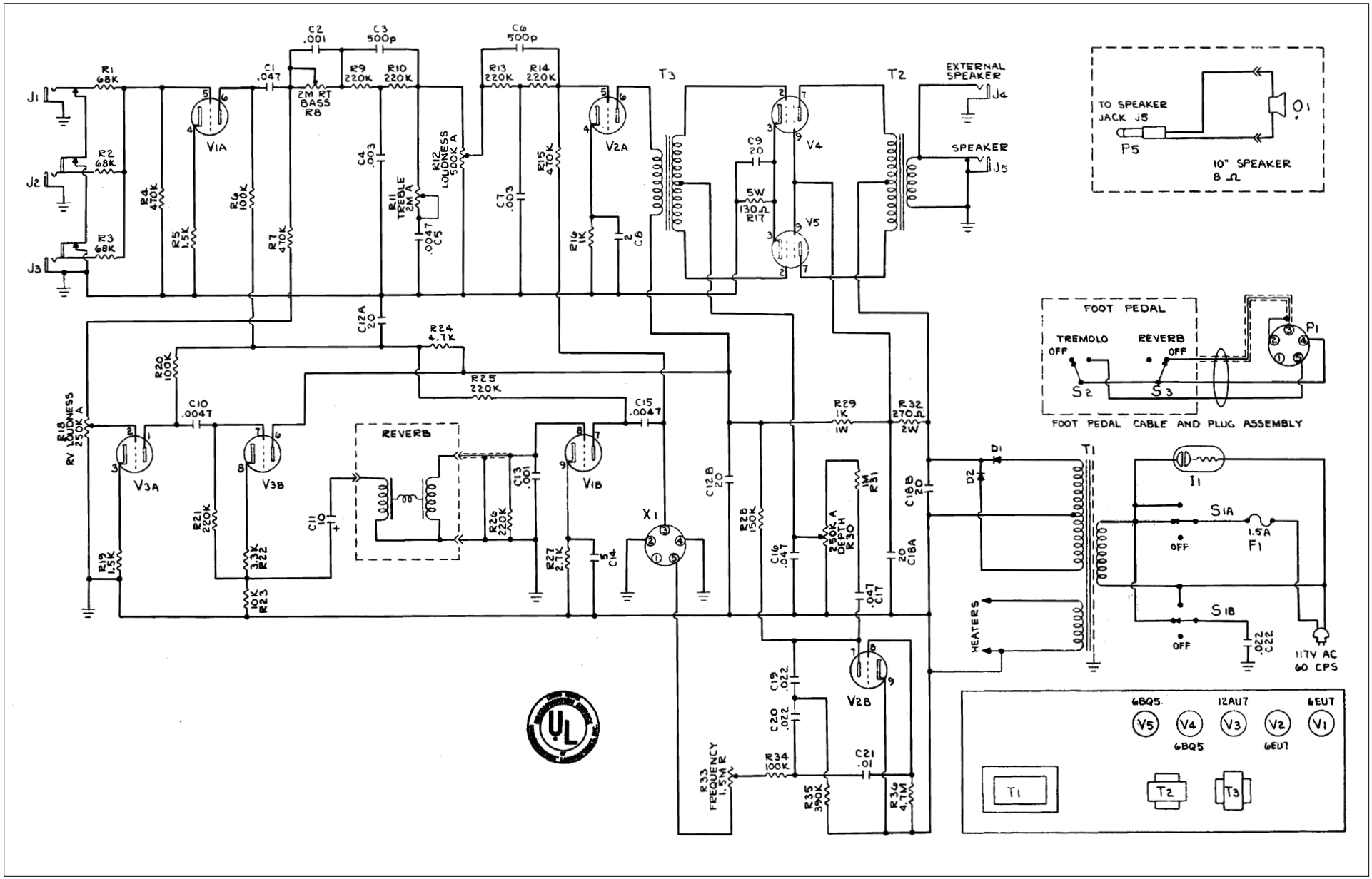
J1
J2
J3
R1 68K
R2 68K
R3 68K
R4 470K
R5 1.5K
R6 100K
R7 470K
C1 .047
C2 .001
C3 500p
2M RT BASS R8
R9 220K
R10 220K
C4 .003
R11 TREBLE 2M A
.0047 C5
R12 LOUDNESS 500K A
C6 500p
R13 220K
R14 220K
C7 .003
R15 470K
R16 1K
2 C8
V1A
V2A
T3
T2
V4
V5
C9 20
5W 130Ω R17
EXTERNAL SPEAKER
J4
SPEAKER
J5
TO SPEAKER JACK J5
P5
O1
10" SPEAKER 8 Ω
C12A 20
R24 4.7K
R20 100K
R25 220K
R18 RV LOUDNESS 250K A
C10 .0047
C15 .0047
V3A
V3B
V1B
REVERB
C11 10
R21 220K
R19 1.5K
3.3K R22
10K R23
C13 .001
R26 220K
R27 2.7K
C14 5
X1
C12B 20
R28 150K
C16 .047
250K A DEPTH R30
1M R31
R29 1K 1W
R32 270Ω 2W
C18B 20
C18A 20
.047 C17
D1
D2
T1
HEATERS
FOOT PEDAL
TREMOLO OFF
REVERB OFF
S2
S3
P1
FOOT PEDAL CABLE AND PLUG ASSEMBLY
I1
S1A
OFF
1.5A F1
S1B
OFF
.022 C22
117V AC 60 CPS
C19 .022
C20 .022
V2B
R33 FREQUENCY 1.5M R
R34 100K
C21 .01
R35 390K
R36 4.7M
6BQ5
12AU7
6EU7
V5
V4
V3
V2
V1
6BQ5
6EU7
T1
T2
T3

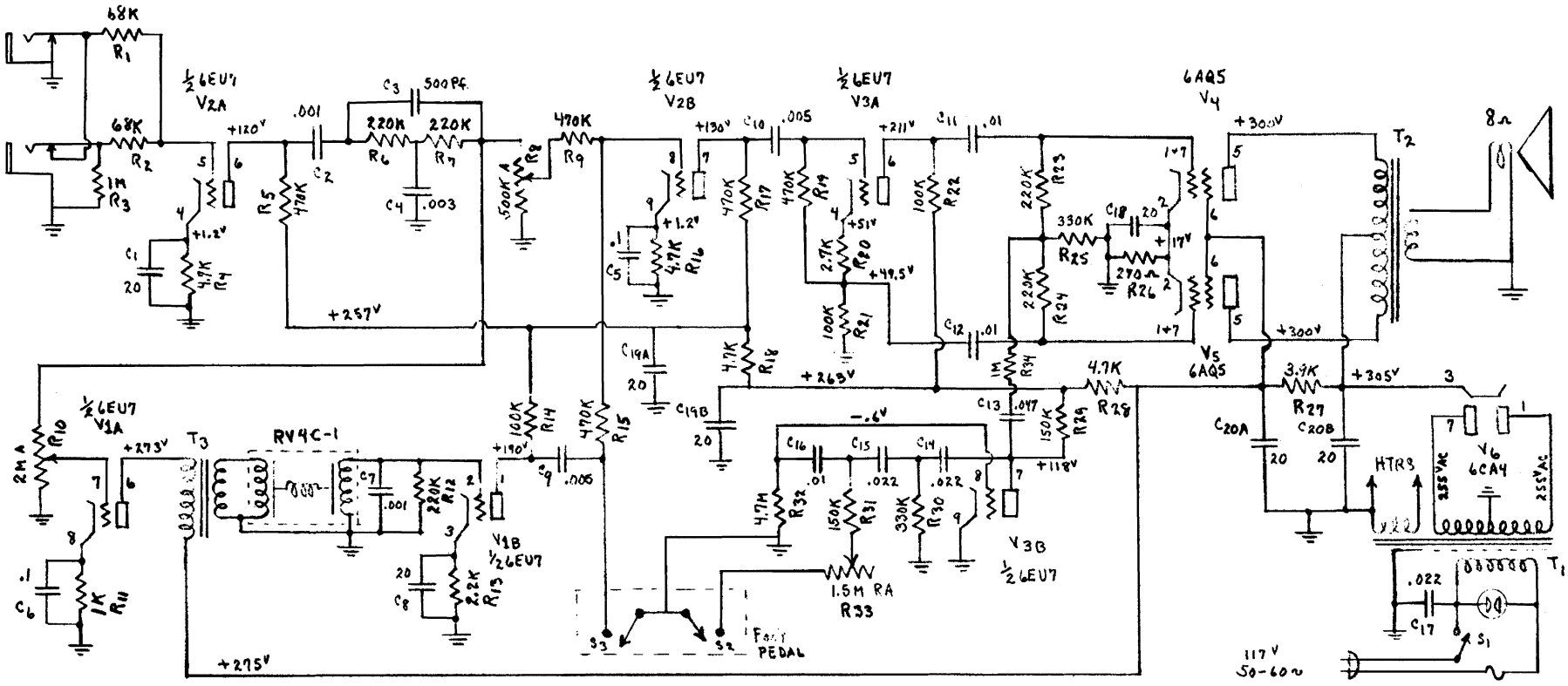

T1 POWER TRANSFORMER TF 8A-P
T2 OUTPUT " TF 18-01
T3 DRIVER " TF E6400
SPEAKER 8Ω Z, 10" S20001
R8 VOLUME CONTROL 500K AUDIO TAPER
R10 REVERB VOLUME 2MEG "
R33 TREMOLO FREQUENCY 1.5M REV. AUDIO
S2, S3 SPST PUSH PUSH SW.
REVERBERATION UNIT RV4C-1

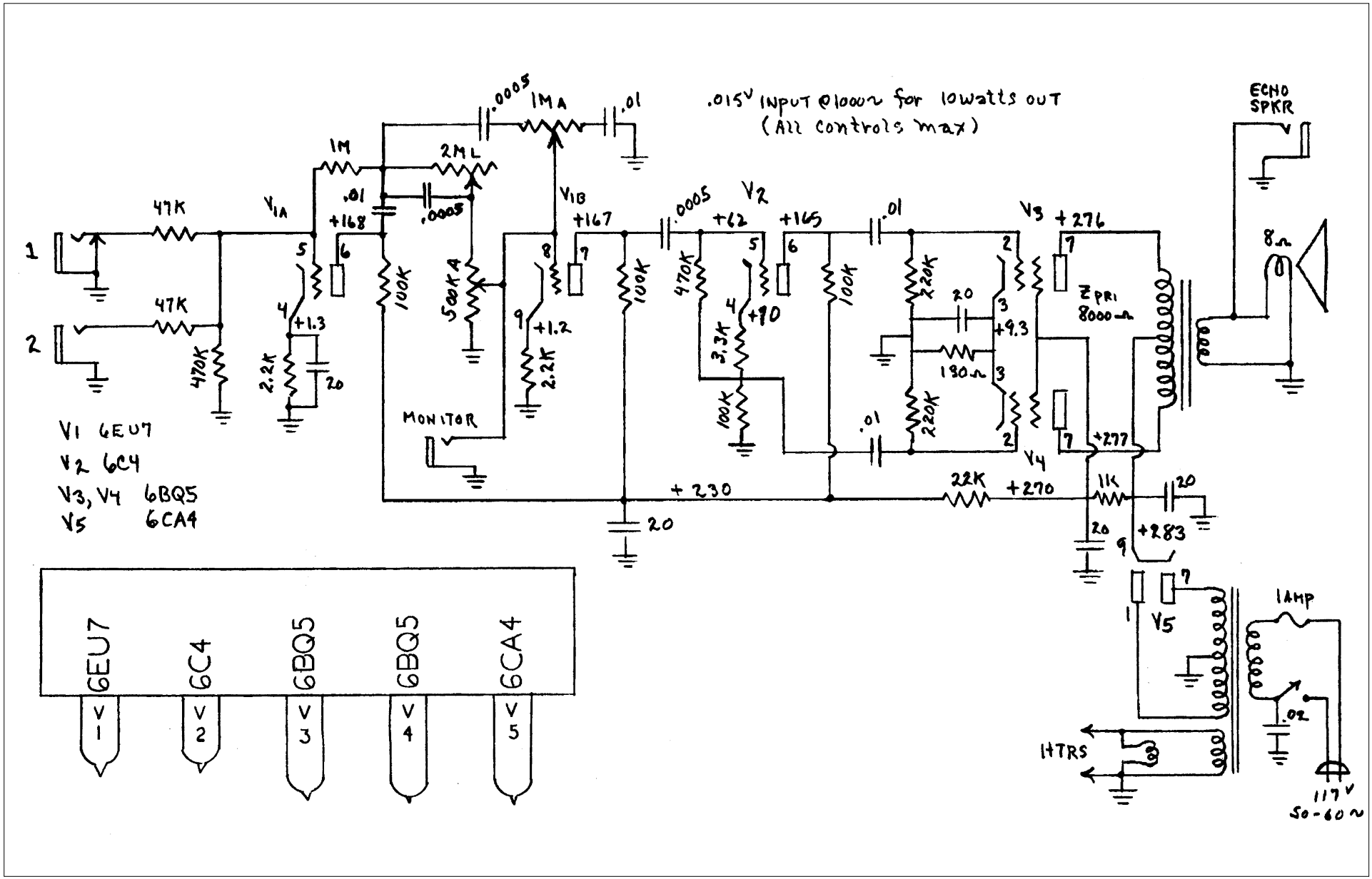
.015V INPUT @1000Ω for 10watts OUT
(All controls max)
ECHO SPKR
8Ω
1
2
47K
47K
470K
2.2K
20
1M
2ML
.01
.0005
+168
V1A
V1B
.0005
1MA
.01
500K
100K
+1.3
+1.2
2.2K
+167
MONITOR
.0005
V2
+62
+165
470K
3.3K
+90
100K
100K
.01
220K
20
+9.3
180Ω
220K
.01
V3
+276
Z PRI 8000Ω
V4
+277
+230
22K
+270
1K
20
+283
20
V1 6EU7
V2 6C4
V3, V4 6BQ5
V5 6CA4
6EU7
6C4
6BQ5
6BQ5
6CA4
V1
V2
V3
V4
V5
V5
1AMP
.02
HTRS
117V
50-60~

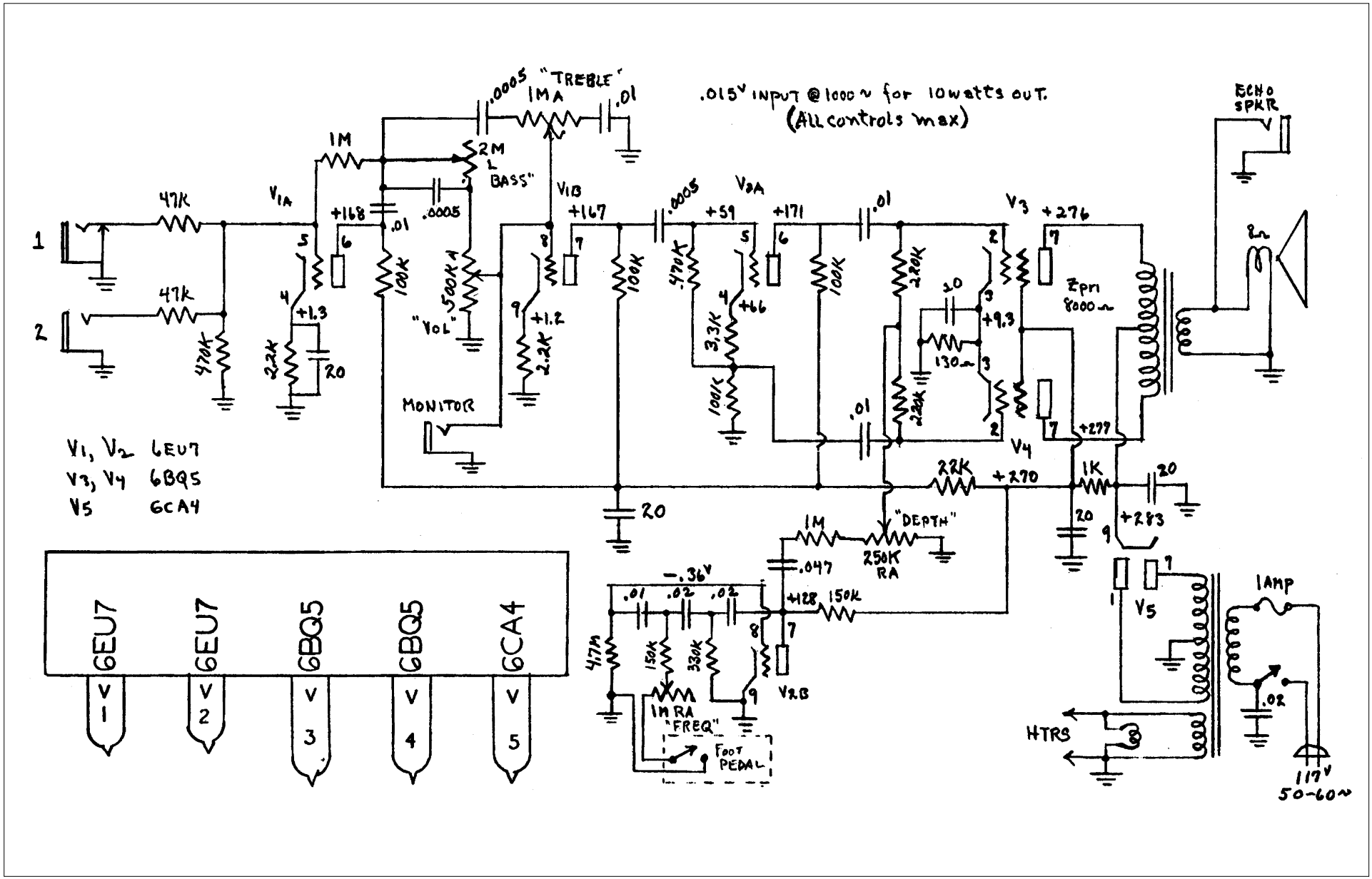
.015V INPUT @ 1000~ for 10 watts OUT.
(All controls max)
"TREBLE"
1MA
.0005
.01
1M
2M
"BASS"
47K
V1A
+168
.0005
.01
100K
500K
"VOL"
V1B
+167
.0005
V2A
+59
+171
.01
V3
+276
470K
3.3K
+66
100K
220K
20
130
+9.3
Zpri
8000
+1.3
+1.2
2.2K
MONITOR
.01
+277
V4
22K
+270
1K
20
+283
ECHO SPKR
8Ω
1
2
V1, V2 6EU7
V3, V4 6BQ5
V5 6CA4
6EU7
6EU7
6BQ5
6BQ5
6CA4
V1
V2
V3
V4
V5
1M
"DEPTH"
250K RA
.047
-.36V
.01
.02
.02
+128
150K
4.7M
150K
330K
1M RA "FREQ"
FOOT PEDAL
V2B
V5
1AMP
.02
HTRS
117V
50-60~

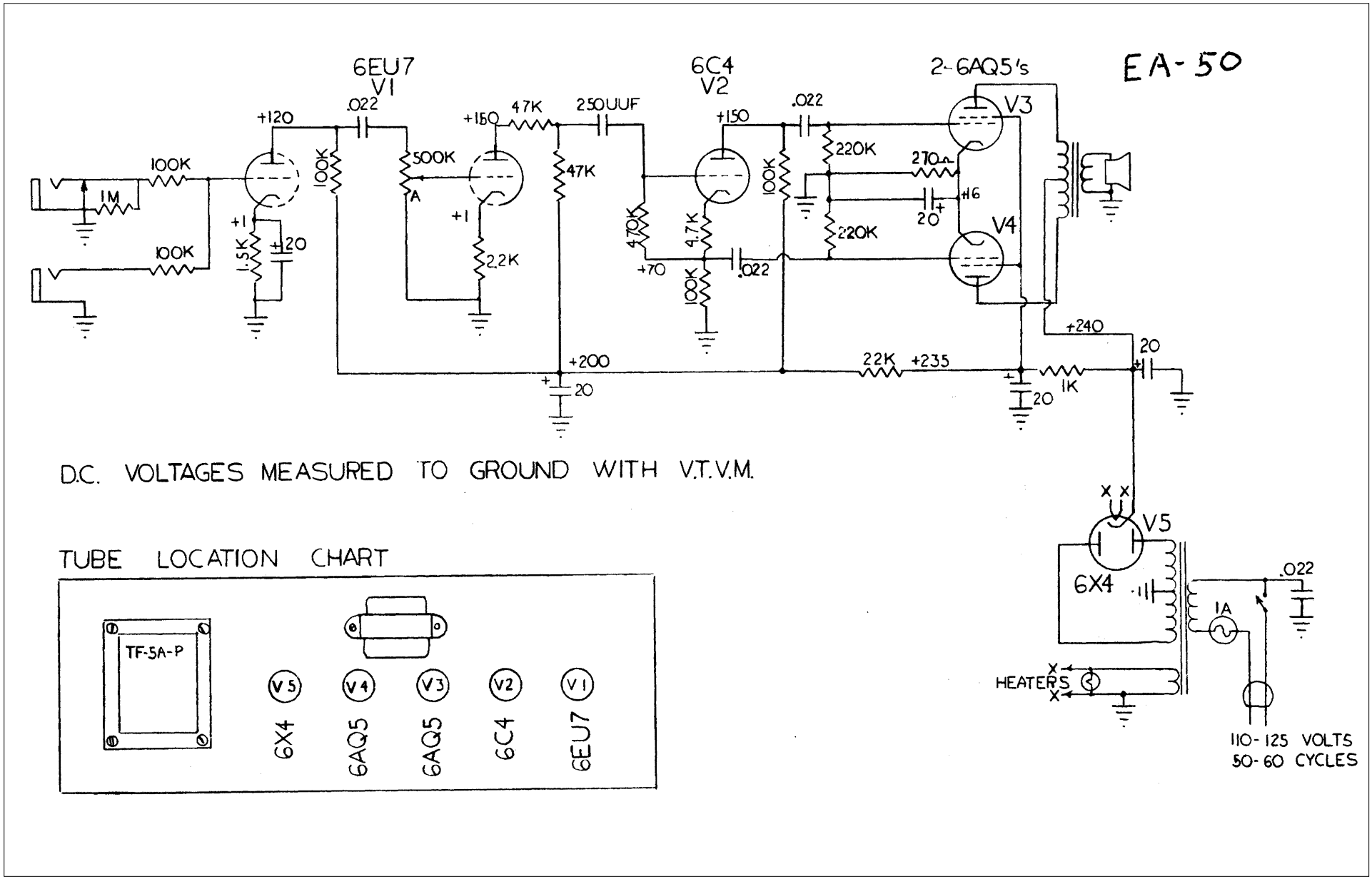
EA-50
6EU7
V1
6C4
V2
2-6AQ5's
V3
V4
V5
6X4
100K
1M
100K
+120
.022
500K
A
+150
47K
250UUF
47K
+1
2.2K
1.5K
+20
470K
4.7K
+70
.022
+150
.022
220K
270Ω
+16
20
220K
+240
20
+200
20
22K
+235
1K
20
D.C. VOLTAGES MEASURED TO GROUND WITH V.T.V.M.
TUBE LOCATION CHART
TF-5A-P
V5
V4
V3
V2
V1
6X4
6AQ5
6AQ5
6C4
6EU7
.022
1A
HEATERS
110-125 VOLTS
50-60 CYCLES

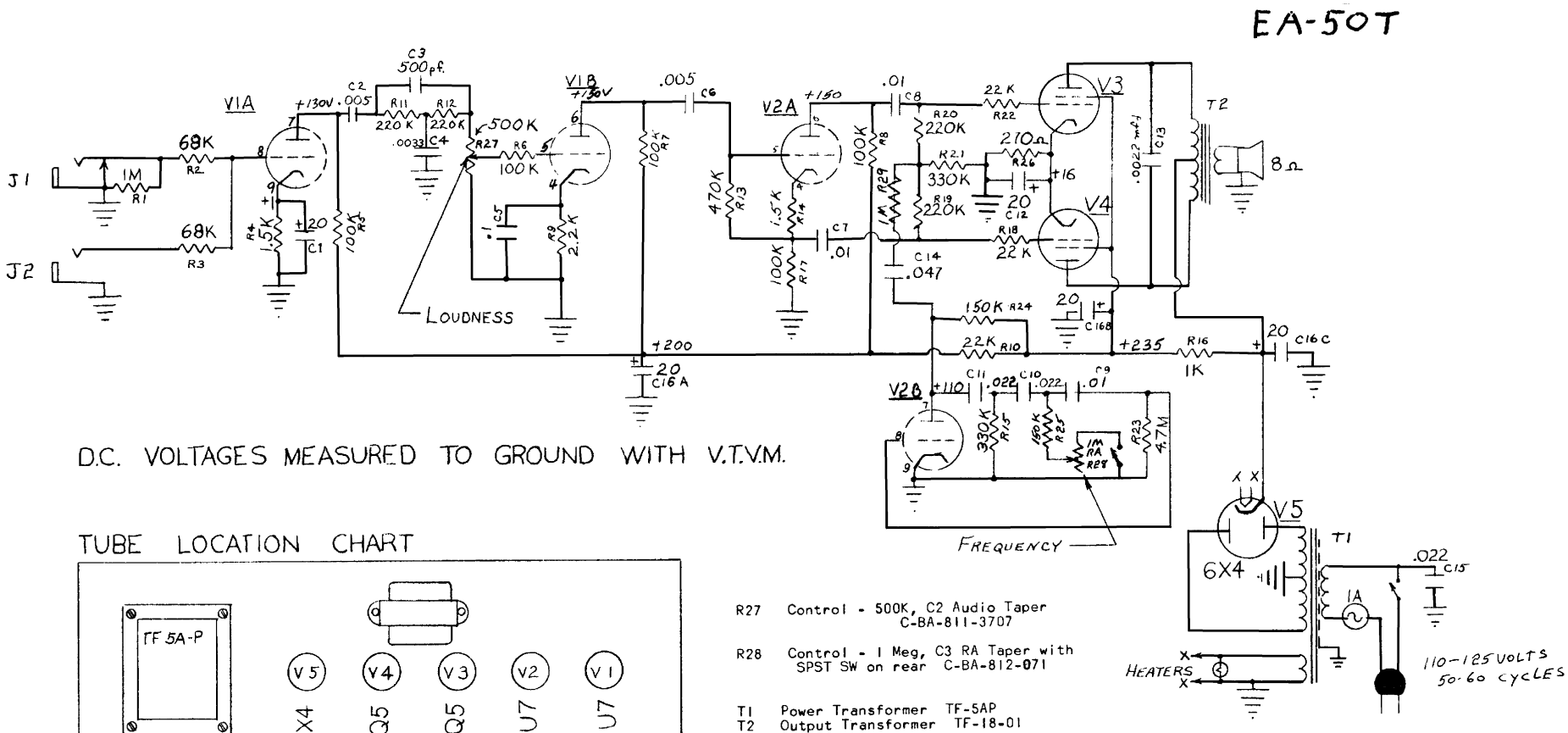

D.C. VOLTAGES MEASURED TO GROUND WITH V.T.V.M.

TUBE LOCATION CHART

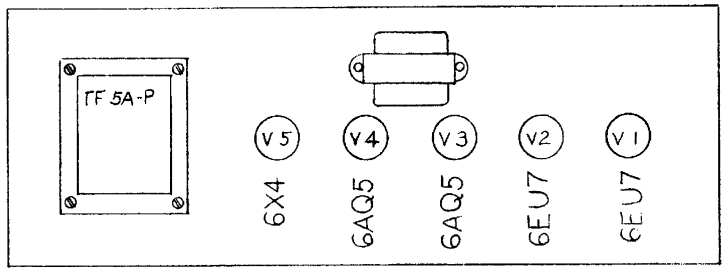

R27 Control - 500K, C2 Audio Taper C-BA-811-3707

R28 Control - 1 Meg, C3 RA Taper with SPST SW on rear C-BA-812-071

T1 Power Transformer TF-5AP
T2 Output Transformer TF-18-01

S1 SPST Rotary Switch, 3/8" split knurled shaft SW-898

8 ohm, 10" Speaker S-20001

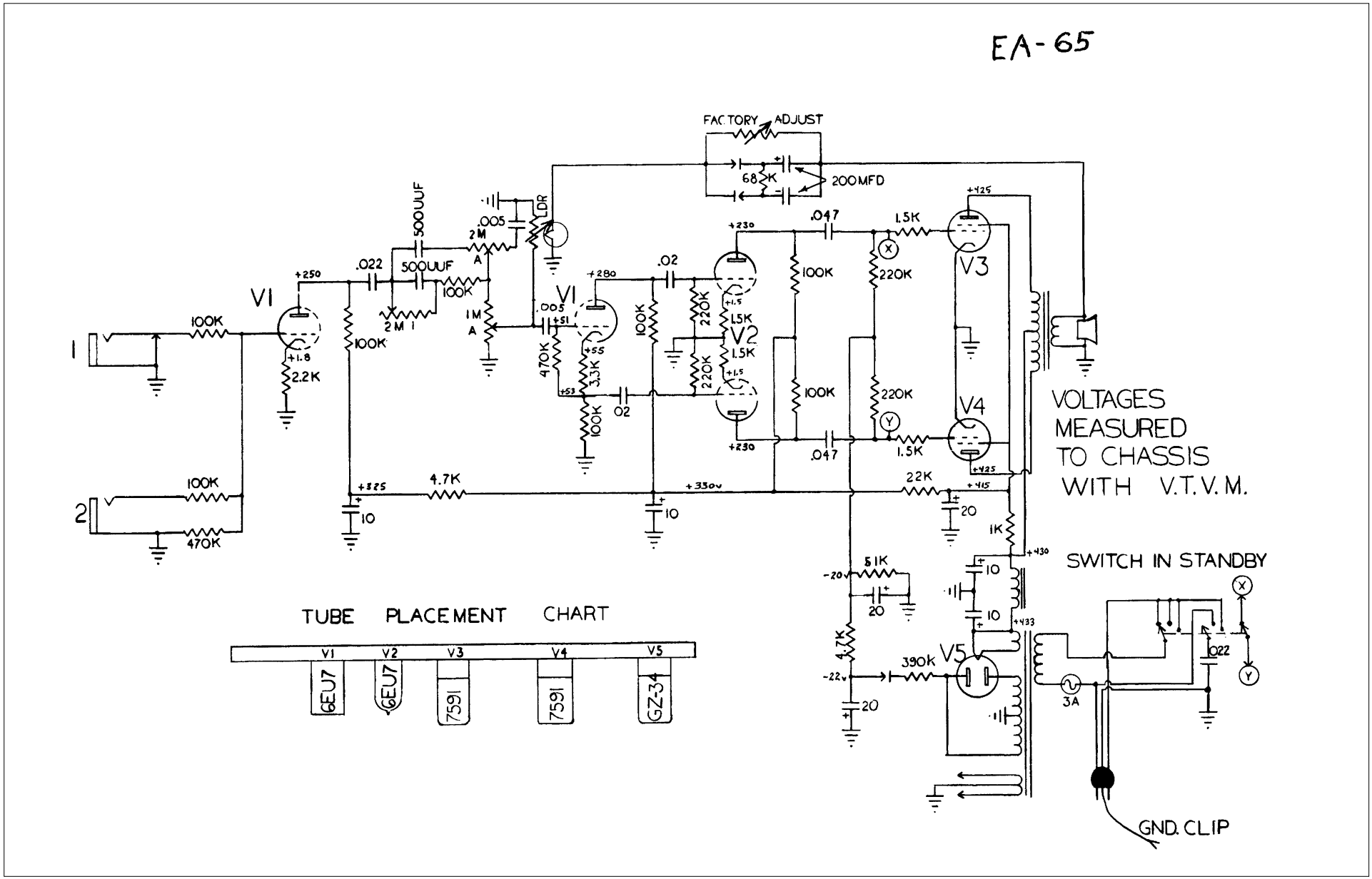
EA-65
FACTORY ADJUST
68K
200MFD
500UUF
.005
2M
A
DR
.022
500UUF
100K
2M
1M
A
V1
+250
100K
+1.8
2.2K
100K
1
2
100K
470K
+280
.005
+51
470K
+55
3.3K
+53
100K
.02
.02
100K
220K
+1.5
1.5K
V2
1.5K
+1.5
220K
+230
.047
100K
100K
.047
+425
1.5K
220K
220K
1.5K
V3
V4
+425
+415
22K
20
1K
+430
+325
4.7K
10
+330v
10
VOLTAGES
MEASURED
TO CHASSIS
WITH V.T.V.M.
SWITCH IN STANDBY
51K
-20v
20
10
10
+433
4.7K
-22v
390K
V5
20
3A
.022
GND. CLIP
TUBE PLACEMENT CHART
V1
V2
V3
V4
V5
6EU7
6EU7
7591
7591
GZ-34

EA-70

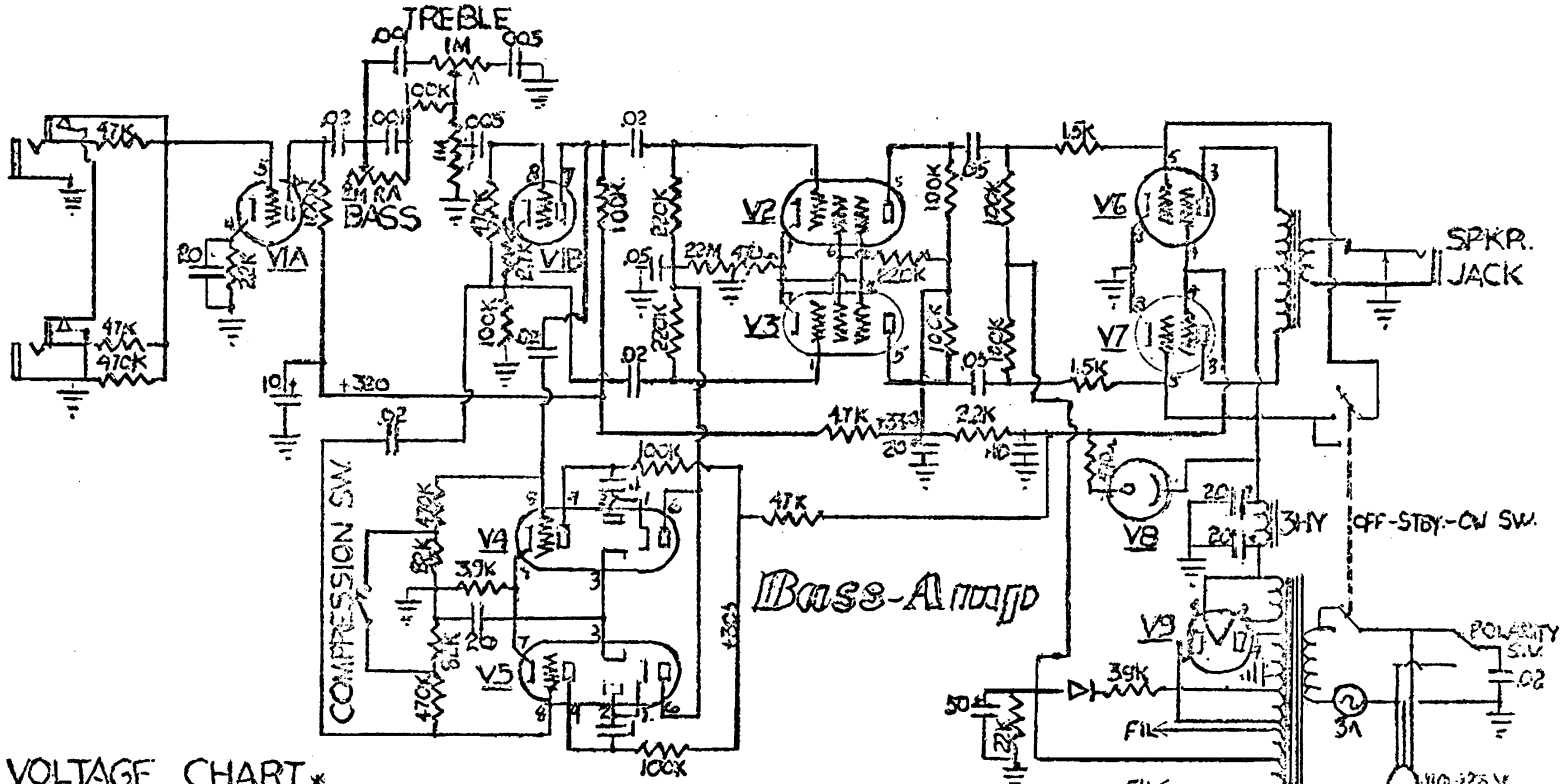

VOLTAGE CHART*

TUBE	TYPE	PIN 1	PIN 2	PIN 3	PIN 4	PIN 5	PIN 6	PIN 7	PIN 8	PIN 9
V1	6EU7	FIL	FIL	—	1.9	0	235	235	59	76
V2	6BQ6	0	2.7	FIL	FIL	120	45	2.7	—	—
V3	6BQ6	0	2.7	FIL	FIL	120	45	2.7	—	—
V4	6BM8	1.6	1.6	3.8	FIL	FIL	0	7.5	0	260
V5	6BM8	1.6	1.6	3.8	FIL	FIL	0	36	0	260
V6	6L6GC	GND	FIL	423	345	33	—	FIL	GND	—
V7	6L6GC	GND	FIL	423	345	33	—	FIL	GND	—
V8	OC3	425	—	—	—	—	—	350	—	—
V9	GZ3F	GND	FIL	—	350	—	350	—	450	—

*ALL DC VOLTAGES MEASURED TO CHASSIS WITH V.T.V.M.

TUBE PLACEMENT CHART

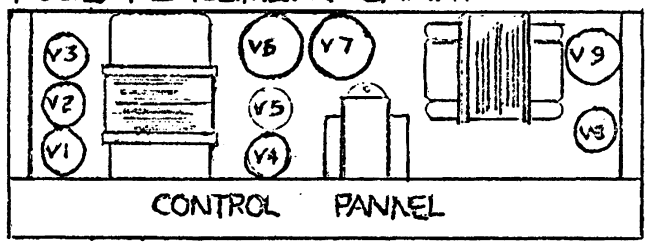

EA-71

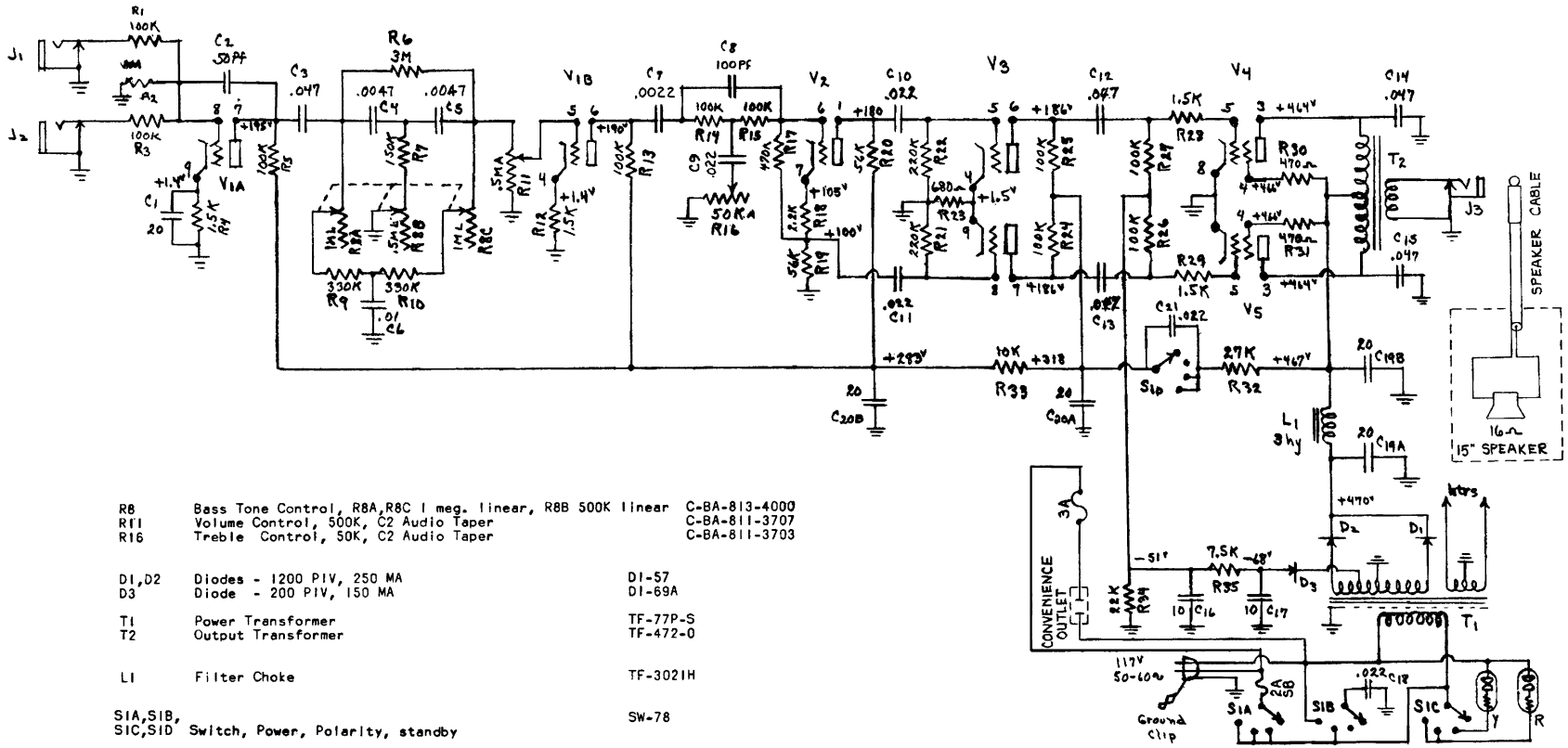

R8	Bass Tone Control, R8A,R8C 1 meg. linear, R8B 500K linear	C-BA-813-4000
R11	Volume Control, 500K, C2 Audio Taper	C-BA-811-3707
R16	Treble Control, 50K, C2 Audio Taper	C-BA-811-3703
D1,D2	Diodes - 1200 PIV, 250 MA	D1-57
D3	Diode - 200 PIV, 150 MA	D1-69A
T1	Power Transformer	TF-77P-S
T2	Output Transformer	TF-472-0
L1	Filter Choke	TF-3021H
S1A,S1B, S1C,S1D	Switch, Power, Polarity, standby	SW-78
	15" Speaker, 16 ohm, 40 cycle	S-0127

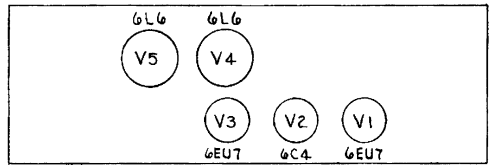

DC VOLTAGES TO CHASSIS WITH V.T.V.M.
CAPACITORS IN MFD EXCEPT WHERE NOTED.

EA-72

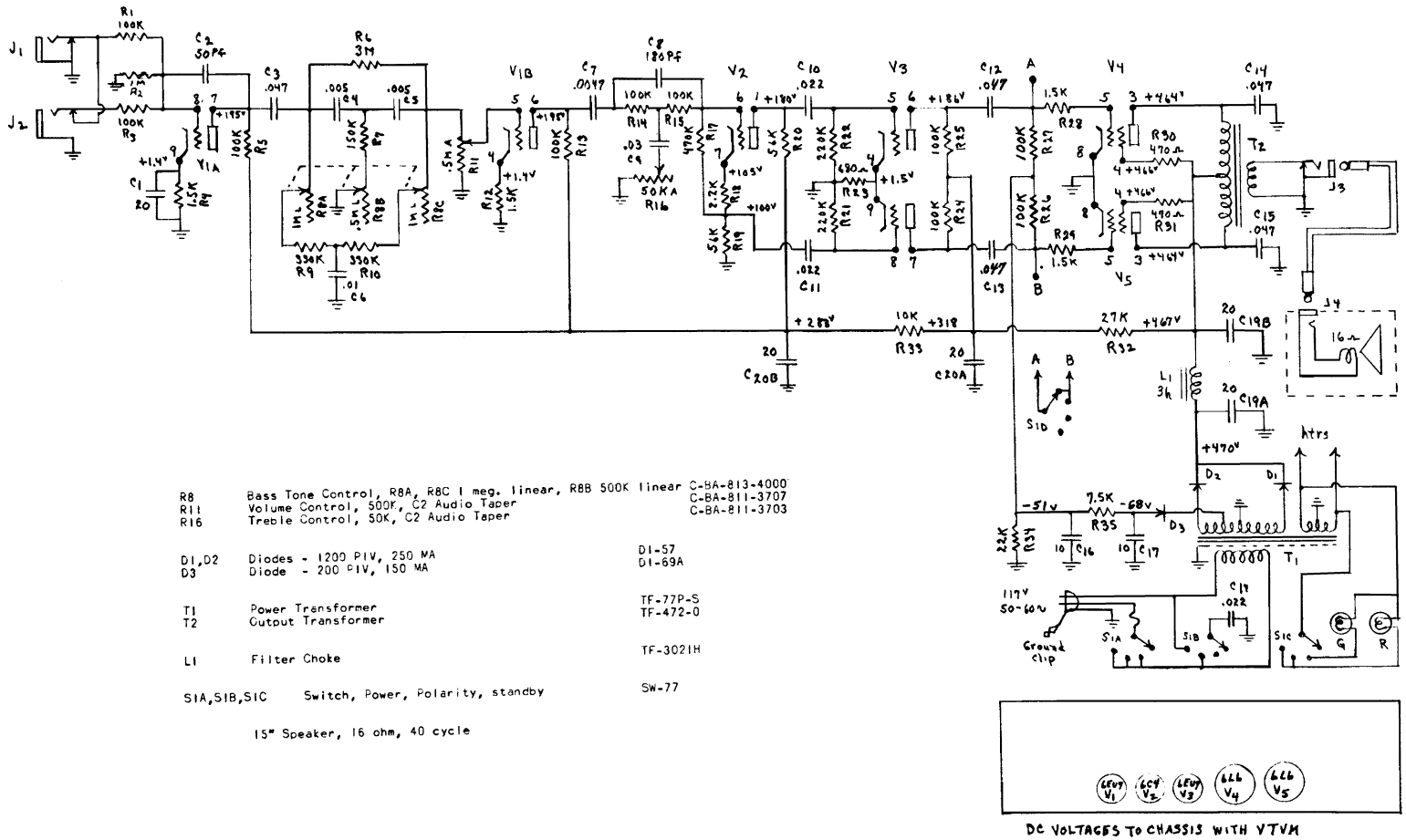

R8 R11 R16	Bass Tone Control, R8A, R8C 1 meg. linear, R8B 500K linear Volume Control, 500K, C2 Audio Taper Treble Control, 50K, C2 Audio Taper	C-BA-813-4000 C-BA-811-3707 C-BA-811-3703
D1,D2 D3	Diodes - 1200 PIV, 250 MA Diode - 200 PIV, 150 MA	D1-57 D1-69A
T1 T2	Power Transformer Output Transformer	TF-77P-S TF-472-0
L1	Filter Choke	TF-3021H
S1A,S1B,S1C	Switch, Power, Polarity, standby	SW-77

15" Speaker, 16 ohm, 40 cycle

DC VOLTAGES TO CHASSIS WITH VTVM

FUSE

The fuse used in this Amplifier is a type 3AG of three amperes rating.

DO NOT USE FUSES OF HIGHER RATING

SERVICE

If the amplifier is in need of servicing, it should be taken to a reliable radio man. The electrical diagram in this folder should be shown the repairman to assist him in servicing the amplifier.

EA-300 RVT

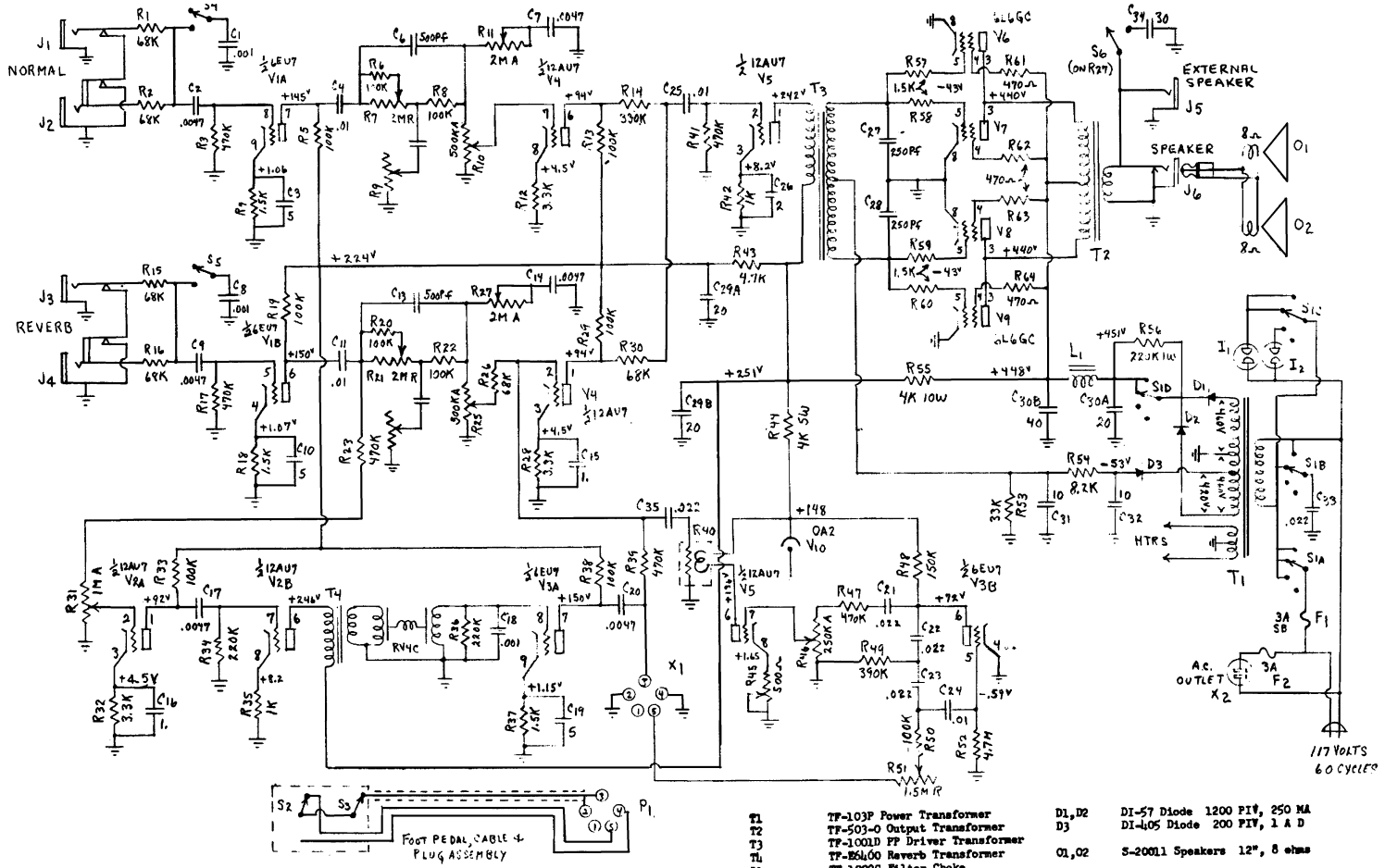

Serial Number
A-65,001 to

T1	TF-103F Power Transformer	D1,D2	DI-57 Diode 1200 PIV, 250 MA
T2	TF-503-O Output Transformer	D3	DI-405 Diode 200 PIV, 1 A D
T3	TF-1001D PP Driver Transformer	O1,O2	S-20011 Speakers 12", 8 ohms
T4	TF-B6400 Reverb Transformer		
I1	TF-1002C Filter Choke	R46	CBA-811-3701 Control 250K Audio
		R11	CBA-811-3702 Control 2 meg Audio
S1A,B,C,D	SW-78A Switch	R9,R10,	
S2,S3	SW-82403 Foot Pedal Switches	R24,R25	CBA-811-3707 Control 500K Audio
S4,S5	SW-129 DPDT Slide Switches	R31	CBA-811-3709 Control 1 meg Audio
		R51	CBA-811-3711 Control 1.5 meg RA
I1	PL-32R Pilot Light (Red)	R7,R21	CBA-811-3751 Control 2 meg RA
I2	PL-32A Pilot Light (Amber)	R45	CB-23391 Control 500 ohm WW
		R27	CBA-4005 Control 2 meg Audio w/switch

T1	Power Transformer	TF-135P	(2)	Speakers, 10" 8 ohm	S-12197
T2	Output Transformer	TF-531-0	(1)	Speaker, 15", 16 ohm	S-0128
L1	Filter Choke	TF-3021M	R61	10 meg reversed audio (bass) control	C-BA-811-3710
L1, L2	Inductances 3.7 mh		R58, R66	250K audio taper (volume and depth) control	C-BA-811-3701
			R57	2 meg reversed audio (BASS) control	C-BA-811-3751
			R62, R60	500K audio taper (volume and treble) control	C-BA-811-[illegible]07
S1	Switch - off, standby, on-on	SW-78	R64	1 meg audio taper (treble) control	C-BA-8[illegible]9
			R67	1.5 meg reversed audio (frequency) control	C-BA-8[illegible]1
LDR-1	Light Dependent Resistor Lamp Assembly	RE-LDR-430G	R65	500 ohm wire wound control	C-B-233[illegible]

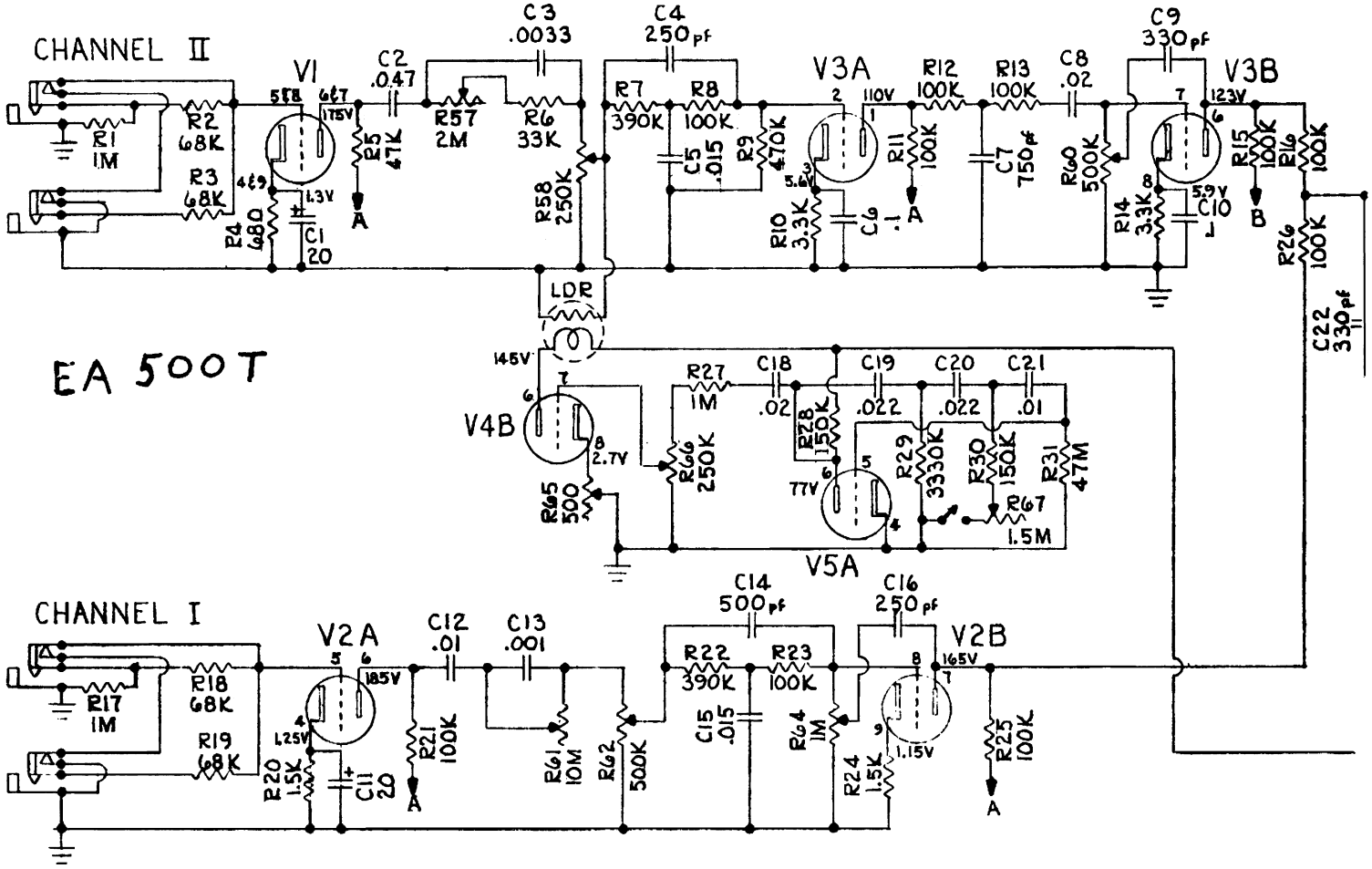

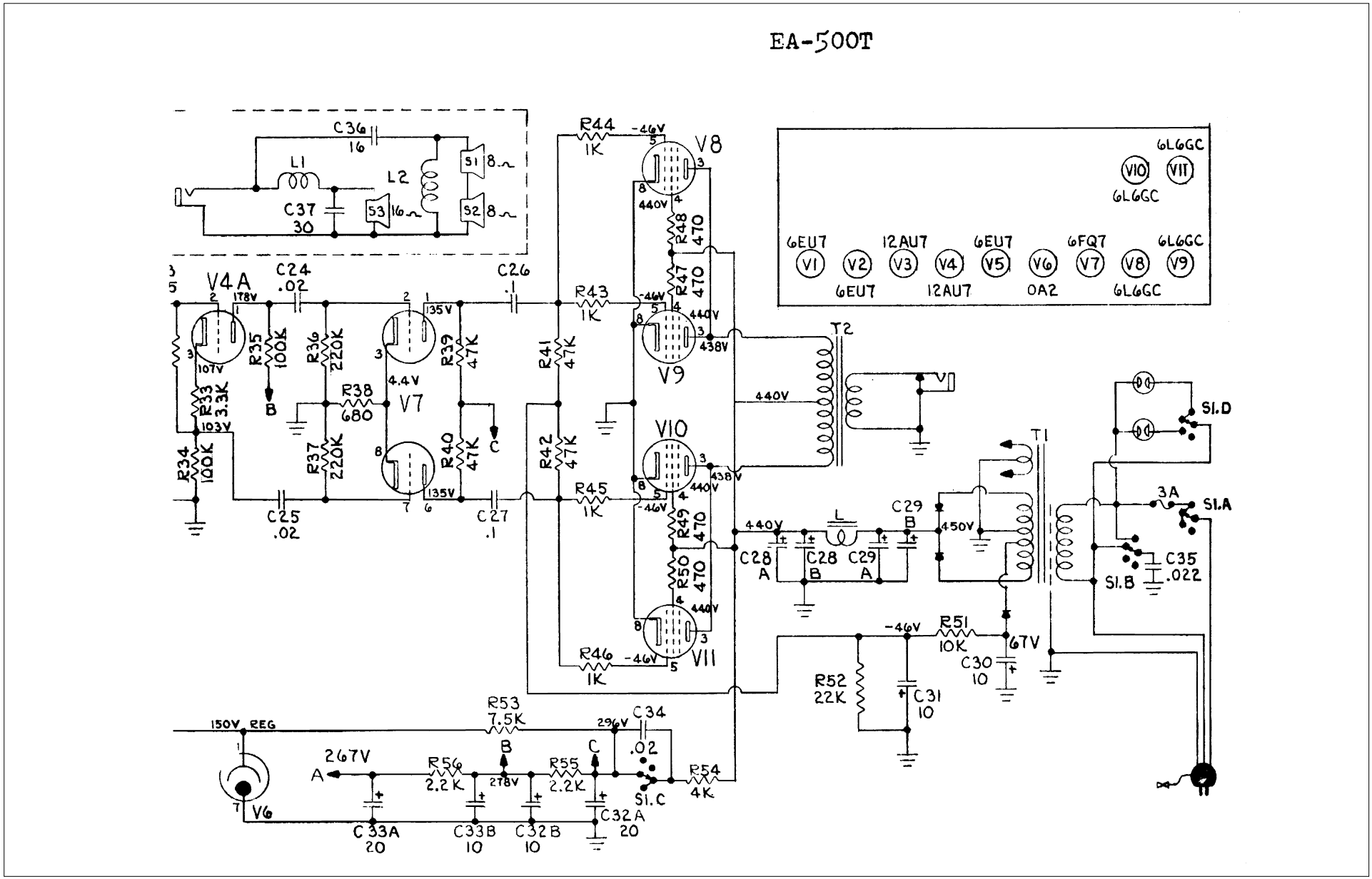
EA-500T
C36
16
L1
L2
C37
30
S1
S2
S3
8Ω
16Ω
V4A
C24
.02
C26
.1
R35
100K
R36
220K
R38
680
R39
47K
R40
47K
R37
220K
R33
3.3K
R34
100K
C25
.02
C27
.1
V7
R41
47K
R42
47K
R43
1K
R44
1K
R45
1K
R46
1K
V8
V9
V10
V11
R47
470
R48
470
R49
470
R50
470
T2
T1
L
C28
A
C28
B
C29
A
C29
B
R51
10K
R52
22K
C30
10
C31
10
C35
.022
S1.D
S1.A
S1.B
3A
6L6GC
6EU7
12AU7
6EU7
6FQ7
6L6GC
6EU7
12AU7
OA2
6L6GC
V1
V2
V3
V4
V5
V6
V7
V8
V9
V10
V11
150V REG
V6
R53
7.5K
C34
.02
R54
4K
R56
2.2K
R55
2.2K
C33A
20
C33B
10
C32B
10
C32A
20
S1.C
267V
278V
296V
440V
438V
450V
67V
-46V
107V
178V
135V
4.4V
103V

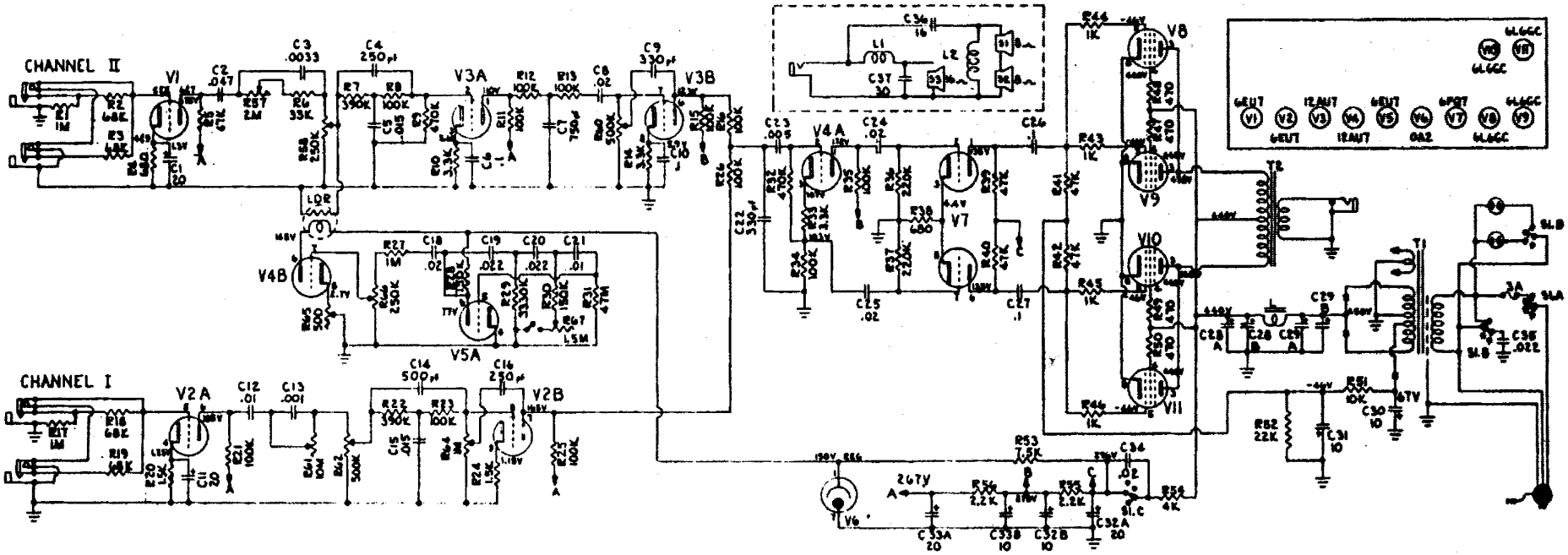

Ediphone Model EA-500T