Clarion Co., Ltd.
Export Division—22-3, Shibuya 2-chome, Shibuya-ku, Tokyo, 150 Japan
Tel: 03-400-1121 Fax: 03-400-8679 Telex: J22908, J22152
Service Dept.—50 Kamitoda, Toda-shi, Saitama, 335 Japan Tel: 0484-43-1111 Telex: J2962628 CLAFA

Clarion Service Manual

Model 9425RT

Model 9000E

Model 9425RT
(PE-9102A)

Model 9000E
(PE-9125A, PU-9125A)

SPECIFICATIONS:

(The specifications for this product were determined and are presented in accordance with specification standards established by the Ad Hoc Committee of Car Stereo Manufacturers.)

General

Power supply voltage: DC 14.4V (10.8 to 15.6V allowable)
Current consumption: Less than 5A
Speaker impedance: 4 ohms (4 to 8 ohms allowable)
Weight: 2.0kg (4.42 lbs)
Dimensions:

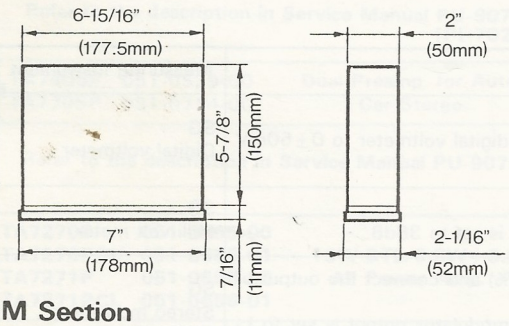

FM Section

Frequency range: 87.9MHz to 107.9MHz
Usable sensitivity: 12dBf (1.1μV./75 ohms)
50dB Quieting sensitivity: 17dBf (2.0μV./75 ohms)
Capture ratio: 1.5dB
Alternate channel selectivity: 70dB
Stereo separation: 35dB at 1kHz
Frequency response: 30Hz to 15,000Hz, ±3dB

AM Section

Frequency range: 530kHz to 1,620kHz
Usable sensitivity. (20dB S/N): 28μV
Selectivity. (at ±10kHz): 50dB

Tape Section

Tape speed: 4.76cm/s. (1-7/8 ips)
Wow & Flutter: 0.1% W.R.M.S.
Stereo separation: 45dB at 1kHz
Signal/Noise ratio: 120μs(normal)/Dolby B/Dolby C 53dB/63dB/71dB
Frequency response: 120μs(normal) 30Hz to 16,000kHz (±3dB)
70μs(Metal) 30Hz to 18,000kHz

Fast forward time. (C-60): 120sec.
Rewind time. (C-60): 120sec.

Audio Section

Maximum power output: 50W (25W/ch)
Continuous average power output: 12.5W per channel into 4 ohms, 20 to 20kHz at 1.0% THD.
Line output voltage: 500mV into 10k ohms
Tone action: Bass ±10dB at 100Hz
Treble ±10dB at 10kHz

- Noise Reduction System manufactured under license from Dolby Laboratories Licensing Corporation.
- Dolby and the double-D symbol are trademarks of Dolby Laboratories Licensing Corporation.

FEATURES:

- Computer controlled full logic tape transport.
- AM stereo with bandwidth selector.
- Auto reverse with dual direction automatic azimuth adjustment.
- Motorized load/eject.
- Dolby B/C noise reduction.
- APC (Automatic Program Control).
- Digital quartz clock.
- Eject capability with key off (Key off pinch roller release).

■COMPONENT VIEW:

- 9425RT (PE-9102A-A)
- 9000E (PE-9125A-A, PU-9125A-A)

	Main unit	1
300-4976-00	Mounting bracket	1
922-1396-00	Parts bag	1
300-7110-00	Mounting bracket	1
921-8136-00	Parts bag	1
852-7006-00	Extension lead	1

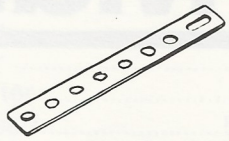

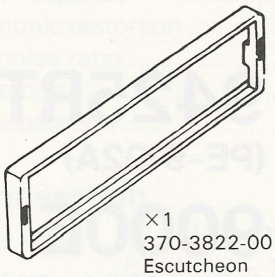

×1
370-3822-00
Escutcheon

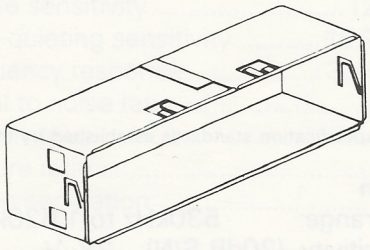

×1
700-5016-10
Tap-screw

×1
723-5000-21
Hex. nut

×1
716-0326-01
MTG bolt

×1
740-5000-10
Flat washer

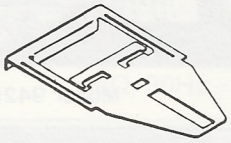

×2
330-8216-00
Hook plate

×1
725-0181-00
Plate nut

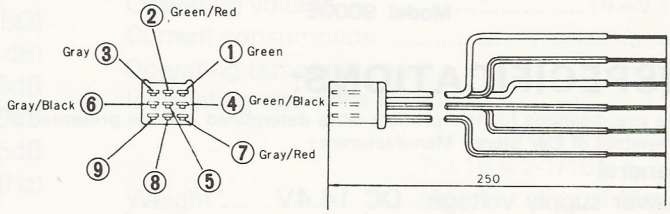

■ADJUSTMENTS:

FM

Item	Adjustment	Measuring Instrument
OV	1) Connect the digital voltmeter to TPd2 and TPd3. 2) Input the non-modulated 98.1MHz/55dB signal and adjust the reading of digital voltmeter to 0±50mV by IFTd104.	SG Digital voltmeter
SASC	1) Set SG to 98.1MHz and input the 30%-modulated frequency 7kHz, 55dB. 2) Adjust the SASC outputs evenly to −3dB by VR101 when the SG output is set to 38dB.	SG Milli-volt meter
Separation	1) Set SG to 98.1MHz, 65dB and modulation of 100% (signal 90%, PL 10%) and connect the output of stereo modulator to the external modulation terminal. 2) Adjust the R-side signal by VRb1 to the minimum level when the stereo modulator output is set to L-side.	SG Stereo modulator Milli-volt meter

DOLBY

Item	Adjustment point	Adjustment
Dolby NR	VR401 and VR402	Insert a Dolby level test tape (400Hz—200nWb/m), connect the millivoltmeter to TP401 and TP402, and adjust VR401 and VR402 to obtain an output of 245mV. (Dolby switch : OFF)

■ADJUSTMENT: <TAPE MECHANISM>

1. Head-azimuth Adjustment

Make playback for the azimuth-tape (8kHz, −10VU), and turn each azimuth-adjusting screw to make each FWD & REV maximum. After adjustment, make adhesion with bond.

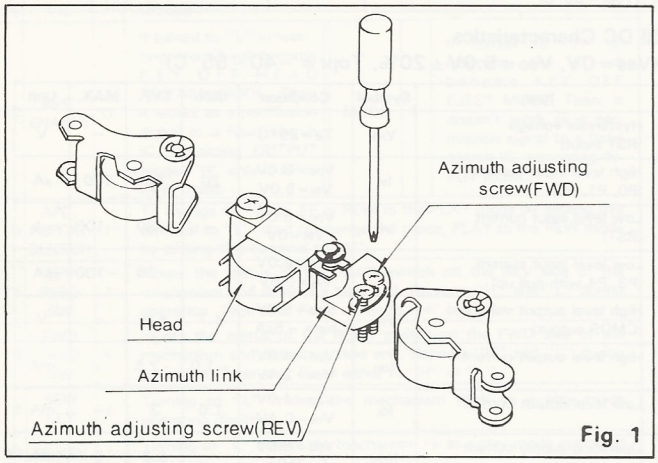

Fig. 1

2. Adjustment of Adsorption Plunger B

Under FF-operation, when adsorption plunger is released, mount the plunger to make the adsorption-surface of adsorption plunger B in parallel to the bent surface of plunger link B, and make adhesion of the rear side of the screw with bond.

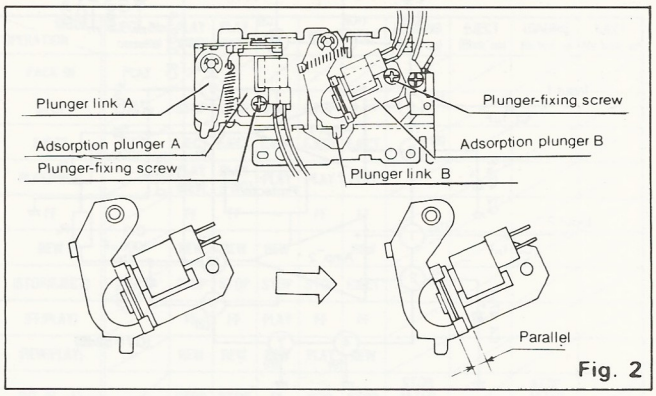

Fig. 2

3. Adjustment of Adsorption Plunger A

Under REW-operation, when adsorption plunger is released, mount the plunger to make the adsorption-surface of adsorption plunger A in parallel to the bent surface of plunger link A, and make adhesion of the rear side of the screw with bond.

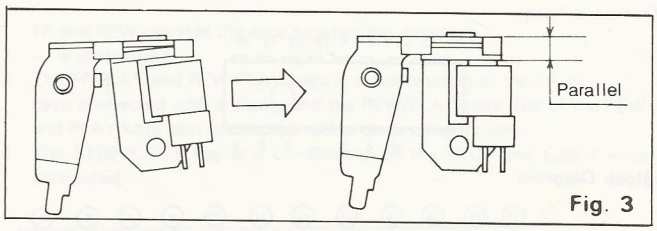

Fig. 3

■EXPLANATION OF IC's:

AN6262	051-0566-00	
■AN6262N	051-0566-01	MUSIC INTERVAL DETECTION IC
AN6263	051-0561-00	
AN6263N	051-0561-01	

Refer to the description in Service Manual PU-9079A. (PI-7028N)

■TA7405P	051-0539-00	Dual Preamp. for Auto Reverse
TA7705P	051-0714-00	Car Stereo

Refer to the description in Service Manual PU-9079A.

TA7270P	051-0655-00	
TA7270PCL	051-0655-01	19W BTL/5.8W+5.8W
■TA7271P	051-0656-00	AF Power Amp.
TA7271PCL	051-0656-01	

TA7270P, TA7271P'S fixing holes are ϕ3.2mm.
TA7270PCL, TA7271PCL'S fixing holes are ϕ3.6mm.

Figure

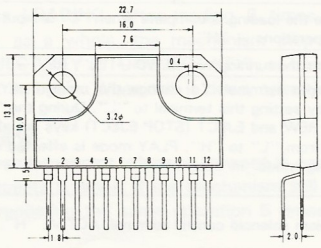

Absolute Maximum Ratings

Supply Voltage	V_{CC} (opr)	18V
Output Current	I_O peak	4.5A
Power Dissipation	P_D	25W

Electrical Characteristics

(V_{CC}=13.2V, R_L=4Ω, Rg=600Ω, f=1kHz, Ta=25°C)

	Item	Symbol	Condition	Min.	Typ.	Max.	Unit
No Signal Supply Current		I_{CCQ}	V_{IN}=0	—	80	145	mA
BTL	Output Power	$P_{OUT(1)}$	THD=10%	16	19	—	W
		$P_{OUT(2)}$	THD=1%	12	15	—	W
	Tortal Harmonic Distortion	$THD_{(1)}$	P_{OUT}=4W, G_V=40dB	—	0.03	0.25	%
	Output Offset Voltage	V_{OFF}	V_{IN}=0	—	0	0.35	V
	Voltage Gain	$G_{V(1)}$	V_{OUT}=0dBm	—	40	—	dB
	Noise Output Voltage	$V_{NO(1)}$	Rg=0 DIN45405 noise filter	—	0.14	—	mV_{rms}
	Ripple Reduction Ratio	$R \cdot R_{(1)}$	f_{ripple}=100Hz V_{ripple}=0dBm	—	−52	−40	dB
DUAL	Output Power	$P_{OUT(3)}$	THD=10%	5	5.8	—	W
	Tortal Harmonic Distortion	$THD_{(2)}$	P_{OUT}=1W	—	0.06	0.30	%
	Voltage Gain	$G_{V(2)}$	V_{OUT}=0dBm	50	52	54	dB
	Noise Output Voltage	$V_{NO(2)}$	Rg=10kΩ BW=20Hz~20kHz	—	0.7	1.5	mV_{rms}
	Ripple Reduction Ratio	$R \cdot R_{(2)}$	f_{ripple}=100Hz V_{ripple}=0dBm	—	−52	−40	dB
	Cross Talk	C·T	V_{OUT}=0dBm	—	−57	—	dB
	Input Impedance	R_{IN}	f=1kHz	—	33	—	kΩ

Block Diagram

(1) BTL

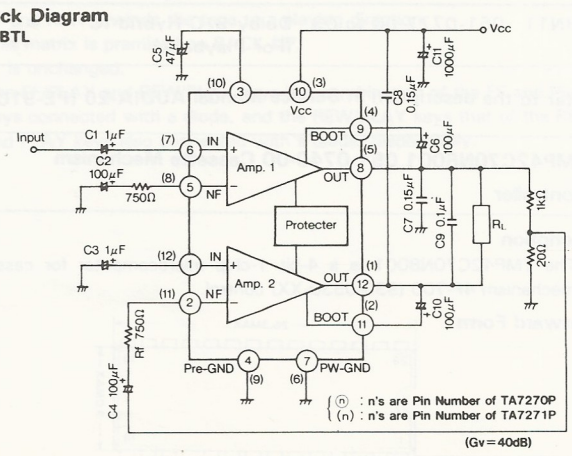

(2) DUAL

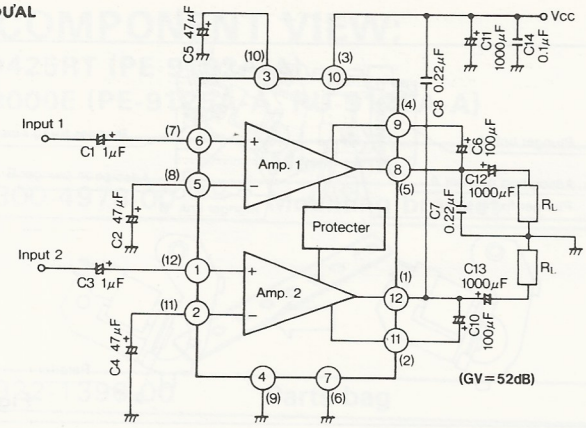

■ μPD1708G600-03 051-0756-00
μPD1708G622-03 051-0756-01 Micro Computer

Refer to the description in Service Manual 8800RT (PE-9074A).
No muting signal output from μPD1708G622, when it is tape mode.
Other, it is all the same to μPD1708G600.

■BA681A 051-0412-00 7 dots LED Driver

Outward Form

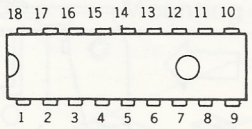

Block Diagram

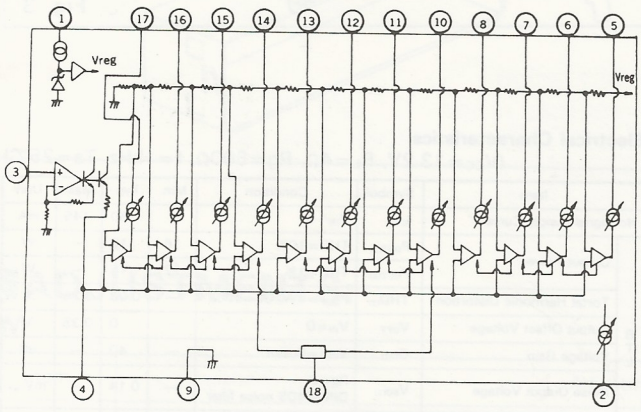

Absolute Maximum Ratings (Ta=25°C)

Item	Symbol	Rating	Unit
Supply Voltage	V_{CC}	15	V
Power Dissipation	P_D	1100	mW

■NJM4558D (Dual inline) 051-0422-51
NJM4558S (Single inline) 051-0285-51 Dual OP Amp.

Refer to the description in Service Manual EQX-700 (EE-626A).

■UHN11 051-0777-00 to 03 Dolby-B/C Hybrid IC (For Playback)

Refer to the description in Service Manual AUDIA-20 (PE-9103A).

■ TMP42C70N8001 051-0740-00 Cassette Mechanism Controller

Description

The TMP42C70N8001 is a 4-bit 1-chip microcomputer for cassette mechanism 4F-700 (930-0530-XX) control.

I Outward Form

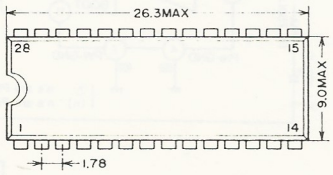

II Maximum Ratings (Vss=0V)

Item	Symbol	Rating	Unit
Supply voltage	V_{DD}	−0.5~7	V
Input voltage	V_{IN}	−0.5~V_{DD}+0.5	V
Output voltage (except open drain terminal)	V_{OUT1}	−0.5~V_{DD}+0.5	V
Output voltage (Nch open drain terminal P3, P4)	V_{OUT2}	−0.5~12	V
Power dissipation (Topr=85°C)	P_D	300	mA

III DC Characteristics
(Vss=0V, V_{DD}=5.0V±20%, Topr=−40~85°C)

Item	Symbol	Condition	MIN.	TYP.	MAX.	Unit
Hysteresis voltage (RST input)	V_{HS}	Ta=25°C	–	0.3	–	V
High level input current (P0, P1, P2)	I_{IH}	V_{DD}=6.0V V_{IN}=6.0V	20	40	100	μA
Low level input current (RST)	I_{IN1}	V_{DD}=5.0V V_{IN}=0V	–	−30	−100	μA
Low level input current (P3, P4 with pull up)	I_{IL}	V_{DD}=6.0V V_{IN}=0.6V	–	−30	−100	μA
High level output voltage (CMOS output)	V_{OH}	V_{DD}=5.0V I_{OH}=−5μA	4.7	4.9	–	V
High level output current	I_{OH}	V_{DD}=4.0V V_{OH}=2.4V	−1.0	−2.5	–	mA
Low level output current	I_{OL}	V_{DD}=4.0V V_{OL}=0.4V	1.6	3	–	mA
Operating supply current *	I_{DDO}	V_{DD}=6.0V f=2MHz	–	0.8	3	mA

* The $\overline{RST}$ terminal is of 0V by external clock action.
Supply current with Xout and ports opened.

IV Terminal Connection

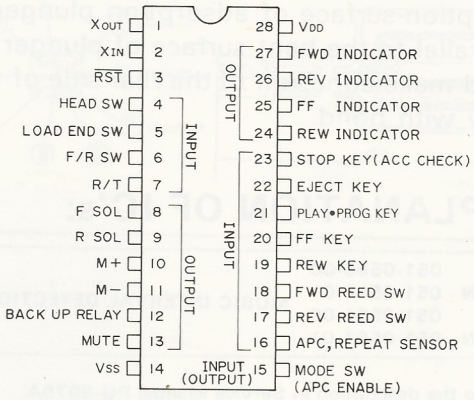

V Terminal Function Table

Although this IC enables KEY OFF EJECT mode and KEY OFF HEAD RELEASE mode to be switched over by either pulling up the pin ⑮ to "H" or pulling it down (or opening), the actions of the other terminals are partly changed.

	KEY OFF HEAD RELEASE			KEY OFF EJECT		
No.	Terminal	I/O	Function	Terminal	I/O	Function
1	XOUT	O	Ceramic resonators terminal.			
2	XIN	I				
3	$\overline{RST}$	I	To reset the microcomputer when "L" is input.			
4	HEAD SW	I	To detect the head's position. When the mode PLAY, FF or REW set to "H" and when the mode STOP set to "L".			
5	LOAD END SW	I	To judge the loading is complete when "L" is input. Other operations → "H".			
6	F/R SW	I	To detect the running way. FWD → "L", REV → "H".			
7	R/T	I	Radio input terminal. To change the mode PLAY to the STOP mode by setting this terminal to "L". During the "L" level, only the FF, REW and EJECT (STOP·EJECT) keys are effective. When turning from "L" to "H", PLAY mode is effected regardless of a preceding mode. In case of "L", STOP mode is effected after loading.			
8	F SOL	O	Mechanism solenoid control terminal. ACTIVE "H".			
9	R SOL	O				
10	M+	O	Mechanism motor forward rotation terminal. "H" in case of LOADING, PLAY, FF or REW mode. "L" in case of STOP or EJECT mode.			
11	M−	O	Mechanism motor reverse rotation terminal. "L" in case of LOADING, PLAY, FF, REW or STOP mode. "H" in case of EJECT mode.			

	KEY OFF HEAD RELEASE			KEY OFF EJECT		
No.	Terminal	I/O	Function	Terminal	I/O	Function
12	BACK UP RELAY	O	Turns to "H" only in loading and EJECT mode. Completes to an end by backup even if Acc is turned of half way. "L" in case of STOP, PLAY, FF or REW mode.	BACK UP RELAY	O	When the mode, LOADING, STOP, PLAY, FF or REW set to "H".
13	MUTE	O	"H" only in stable operation in PLAY mode. Otherwise, "L".			
14	Vss		Ground			
15	APC ENABLE	O	If turned to "L" in resetting, the IC will become KEY OFF HEAD RELEASE MODE. Then it works as a permission signal to a head search IC, becoming OUTPUT mode. "H" only in FF or REW mode.	MODE	I	If turned to "H" in resetting, the IC will become KEY OFF EJECT MODE. Then, it doesn't work as a permission signal to a head search IC, becoming INPUT mode.
16	APC, REPEAT SENSOR	I	To change the mode, FF or REW to the PLAY mode by setting this terminal to "L". And to change the mode, PLAY to the REW mode by setting this terminal to "L".			
17	REV REED SW	I	Inputs the status of the READ switch on the REV side of the mechanism and detects a tape end. Repeats "H" and "L" during operation. Tape end: Fixed either to "H" or "L".			
18	FWD REED SW	I	Inputs the status of the READ switch on the FWD side of the mechanism and detects a tape end. Repeats "H" and "L" during operation. Tape end: Fixed either to "H" or "L".			
19	REW KEY	I	Turning to "L" makes the mechanism REW to a play mode operating direction.			
20	FF KEY	I	Turning to "L" makes the mechanism FF to a play mode operating direction.			
21	PLAY• PROG KEY	I	To change the mode, STOP, FF or REW to the PLAY mode by setting this terminal to "L". If turned to "L" after selecting "H" again, a playback direction will be changed to the opposite, operating as programmed.			
22	EJECT KEY	I	To change the mode, STOP, FF or REW to the EJECT mode by setting this terminal to "L".			
23	STOP KEY	I	To change the mode, PLAY, FF or REW to the STOP mode by setting this terminal to "L".	ACC CHECK	I	Inputs the status of the ACC line, and judged "L" as ACC ON and "H" as ACC OFF. Shifts to EJECT mode when "H" continues for 0.16 second.
24	REW INDI-CATOR	O	"L" is output when the REW mode.			
25	FF INDI-CATOR	O	"L" is output when the FF mode.			
26	REV INDI-CATOR	O	When the mechanism is set to REV mode while playing, "L" is output by pressing the PLAY, FF or REW key.			
27	FWD INDI-CATOR	O	When the mechanism is set to FWD mode while playing, "L" is output by pressing the PLAY, FF or REW key.			
28	VDD		Power supply terminal.			

VI Mechanism Protective Programs

This IC has incorporated the following protective programs in the respective mode of the mechanism.

a) LOADING

When starting from loading, if loading cannot be completed after 3 seconds, the mechanism will shift to EJECT mode. If ejection cannot be completed after 3 seconds, the mechanism will start loading once again. After loading and ejecting 3 times respectively as a whole, the mechanism stops operation. To restart, press the EJECT KEY (STOP/EJECT KEY), or turn off the power supply, and then, turn it on again. When this is done, operation starts from loading.

b) EJECT

As same as LOADING, after loading 2 times and ejecting 3 times respectively as a whole, the mechanism stop operation. To restart, press the EJECT KEY (STOP/EJECT KEY), or turn off power supply, and then, turn it on again. When this is done, operation starts from loading.

c) PLAY, FF, REW

When the head does not advance forward in each operation, the same operation repeats 5 times. If the mechanism still does not function properly after repeating the same operation 5 times, it will shift to STOP mode.

d) PROGRAM

When the mechanism is not reversed at an tape end, a program is excuted 5 times, and then the mechanism will shift to STOP mode. The same applies when a reelbase does not rotate due to hard winding of a tape even if the mechanism is reversed.

VII KEY OFF HEAD RELEASE MODE MATRIX

MODE / OPERATION	EJECT (No cassette)	PLAY (FWD)	PLAY (REV)	FF	REW	STOP	LOADING (Back up)	EJECT (Back up)	LOADING (No back up)	EJECT (No back up)
PACK IN	PLAY									
STOP		STOP	STOP	STOP	STOP	–				
EJECT		EJECT	EJECT	EJECT	EJECT	EJECT				
PLAY/PROG		PLAY (REV)	PLAY (FWD)	PLAY	PLAY	PLAY				
FF		FF	FF	–	FF	FF				
REW		REW	REW	REW	–	REW				
(STOP/EJECT)		STOP	STOP	STOP	STOP	EJECT				
(FF/PLAY)		FF	FF	PLAY	FF	FF				
(REW/PLAY)		REW	REW	REW	PLAY	REW				
R/T (H→L)		STOP	STOP	FF	REW	STOP	STOP AFTER LOADING		STOP AFTER LOADING	
R/T (L→H)				–	–	PLAY				
APC IN		REW	REW	PLAY	PLAY					
TAPE END		PLAY (REV)	PLAY (FWD)	PLAY	PLAY					
ACC OFF		STOP	STOP	STOP	STOP	–	STOP AFTER LOADING	EJECT	LOADING STOP	EJECT STOP
ACC OFF → ON		PLAY	PLAY	PLAY	PLAY	PLAY	LOADING	EJECT	LOADING	LOADING

1. FF and REW rewinds the tape to a playing direction.
2. — is unchanged.
3. The FF/PLAY and REW/PLAY keys is a combination of the FF and PLAY keys connected with a diode, and the REW/PLAY keys that of the REW and PLAY keys also connected with a diode, respectively.
4. The STOP/EJECT key is a combination of the STOP and EJECT keys connected.

VIII KEY OFF EJECT MODE MATRIX

MODE / OPERATION	EJECT (No cassette)	PLAY (FWD)	PLAY (REV)	FF	REW	STOP	LOADING (Back up)	EJECT (Back up)
PACK IN	PLAY							
EJECT		EJECT	EJECT	EJECT	EJECT	EJECT		
PLAY/PROG		PLAY (REV)	PLAY (FWD)	PLAY	PLAY	PLAY		
FF		FF	FF	–	FF	FF		
REW		REW	REW	REW	–	REW		
(FF/PLAY)		FF	FF	PLAY	FF	FF		
(REW/PLAY)		REW	REW	REW	PLAY	REW		
R/T (H→L)		STOP	STOP	FF	REW	STOP	STOP AFTER LOADING	
R/T (L→H)				–	–	PLAY		
APC IN		REW	REW	PLAY	PLAY			
TAPE END		PLAY (REV)	PLAY (FWD)	PLAY	PLAY			
ACC OFF		EJECT	EJECT	EJECT	EJECT	EJECT	EJECT AFTER LOADING	EJECT
ACC OFF → ON							LOADING	EJECT

1. FF and REW rewinds the tape to a playing direction.
2. This matrix is premised on BACK UP.
3. — is unchanged.
4. The FF/PLAY and REW/PLAY keys is a combination of the FF and PLAY keys connected with a diode, and the REW/PLAY keys that of the REW and PLAY keys also connected with a diode, respectively.

■PARTS LIST:

◎Electrical section

◎MAIN P.W.B

REF.NO.	PART NO. (ORDER NO.)	DESCRIPTION	Q'TY
$D_{102,104,201,202,302,303,402\sim404,406\sim409,501,502,503,601,602,604,605,607\sim615,617\sim621,623\sim629}$	001-0330-00	Diode (1SS119)	41
D_{401}	001-0333-31	Diode (MA2082B)	1
D_{410}	001-0377-41	Diode (MA4075M)	1
D_{504}	001-0377-46	Diode (MA4091L)	1
D_{506}	001-0377-48	Diode (MA4091H)	1
D_{606}	001-0423-15	Diode (MA4039)	1
$D_{603,622}$	001-0423-18	Diode (MA4051)	2
D_{505}	001-0447-00	Diode (DSF10B)	1
L_{201}	010-2003-03	Coil (ANT)	1
L_{202}	010-2046-32	Coil (100μH)	1
VR_{101}	012-3808-06	Variable resistor (10kΩ)	1
$VR_{401,402}$	012-3939-05	Variable resistor (10kΩ)	2
$C_{443,444}$	042-0348-00	Electrolytic capacitor (16V2200μF)	2
CCT_{601}	050-0077-62	Component circuit	1
CCT_{603}	050-0078-62	Component circuit	1
CCT_{602}	050-0086-60	Component circuit	1
IC_{405}	051-0422-51	IC (NJM4558D)	1
IC_{404}	051-0655-01	IC (TA7270P-CL)	1
IC_{403}	051-0656-01	IC (TA7271P-CL)	1
IC_{602}	051-0740-00	IC (TMP42C70N-8001)	1
IC_{603}	051-0756-01	IC (μPD1708G-622-03)	1
IC_{401}	051-0777-03	IC (UHN112003B)	1
X_{601}	060-0067-52	Ceramic resonator (KBR500HTL)	1
$CR_{401,402}$	060-0124-00	Filter (for Dolby)	2
X_{602}	061-1053-00	Crystal-OSC	1
Q_{602}	100-1048-00	Transistor (2SA1048)	1
$Q_{503,504}$	100-1297-00	Transistor (2SA1297)	2
Q_{507}	100-1315-00	Transistor (2SA1315-OY)	1
$Q_{620,621,622}$	100-1346-00	Transistor (2SA1346)	3
$Q_{101,201,202,203,204,401,403,404,407,601,609,610,613,614,616,619,623}$	102-2458-00	Transistor (2SC2458-Y,GR,BL)	17
$Q_{603,604,617,618}$	102-3112-00	Transistor (2SC3112-AB)	4
Q_{501}	102-3327-00	Transistor (2SC3327AB)	1
$Q_{205,402,505,607,608,611,612,615}$	102-3400-00	Transistor (2SC3400AC)	8
Q_{506}	103-1225-00	Transistor (2SD1225MPQR)	1
$Q_{405,406}$	103-1504-00	Transistor (2SD1504-D,E)	2

REF.NO.	PART NO. (ORDER NO.)	DESCRIPTION	Q'TY
Q_{502}	108-0369-00	FET (2SK369GR,BL)	1
Q_{508}	125-0003-02	Transistor (RN2202)	1
$Q_{605,606}$	125-2003-06	Transistor (RN1206)	2
$R_{443,627}$	111-2211-81	Film resistor (½W220Ω)	2
R_{626}	111-3391-81	Film resistor (½W3.3Ω)	1
R_{512}	111-5611-81	Film resistor (½W560Ω)	1
R_{405}	114-8201-11	Film resistor (1W82Ω) OM	1
$C_{605,606}$	160-1012-05	Ceramic capacitor (100pF B) HD	2
$C_{103,418,420,448,449,450}$	160-1022-05	Ceramic capacitor (1000pF B) HD	6
$C_{104,204}$	171-1033-06	Ceramic capacitor (0.01μF SR) SC	2
$C_{210,211,212,213}$	171-1533-06	Ceramic capacitor (0.015μF SR) SC	4
$C_{102,105,106,202}$	171-2233-06	Ceramic capacitor (0.022μF SR) SC	4
$C_{207,208}$	171-3333-06	Ceramic capacitor (0.033μF SR) SC	2
C_{504}	172-1042-20	Polyester capacitor (63V0.1μF) SS	1
$C_{430,434,439,440,441,442}$	173-1542-10	Polyester capacitor (50V0.15μF) S	6
$C_{201,611,612}$	174-2200-13	Ceramic capacitor (22pF CH) TC	3
$C_{416,419,427}$	179-1053-62	Electrolytic capacitor (50V1μF) S	3
$C_{607,608}$	179-1063-32	Electrolytic capacitor (16V10μF) S	2
$C_{205,425}$	179-1073-22	Electrolytic capacitor (10V100μF) S	2
C_{609}	179-1073-33	Electrolytic capacitor (16V100μF) S	1
C_{203}	179-2253-62	Electrolytic capacitor (50V2.2μF) S	1
$C_{206,429,431,433,435,502,505}$	179-2273-23	Electrolytic capacitor (10V220μF) S	7
C_{423}	179-4763-22	Electrolytic capacitor (10V47μF) S	1
C_{501}	181-1053-62	Electrolytic capacitor (50V1μF LN) LL	1
$C_{412,413}$	182-1063-32	Electrolytic capacitor (16V10μF) SS	2
$C_{426,432,436}$	182-1073-22	Electrolytic capacitor (10V100μF) SS	3
$C_{414,415,428}$	183-1053-62	Electrolytic capacitor (50V1μF) USS	3
$C_{209,409}$	183-1063-32	Electrolytic capacitor (16V10μF) USS	2
C_{610}	183-1073-12	Electrolytic capacitor (6.3V100μF) USS	1
C_{446}	183-2253-62	Electrolytic capacitor (50V2.2μF) USS	1
C_{604}	183-2263-32	Electrolytic capacitor (16V22μF) USS	1
$C_{410,411}$	183-3343-62	Electrolytic capacitor (50V0.33μF) USS	2
$C_{417,421,437,438}$	183-4753-52	Electrolytic capacitor (35V4.7μF) USS	4
C_{101}	183-4753-62	Electrolytic capacitor (50V4.7μF) USS	1
C_{424}	183-4763-12	Electrolytic capacitor (6.3V47μF) USS	1
$C_{422,447}$	183-4763-32	Electrolytic capacitor (16V47μF) USS	2
$C_{401,503,603}$	183-6863-22	Electrolytic capacitor (10V68μF) USS	3

◎SUB P.W.B

REF.NO.	PART NO. (ORDER NO.)	DESCRIPTION	Q'TY
D_{616}	001-0330-00	Diode (1SS119)	1
D_{301}	001-0377-46	Diode (MA4091)	1
D_{405}	001-0423-24	Diode (MA4091)	1
IC_{601}	051-0412-00	IC (BA681)	1
IC_{302}	051-0561-01	IC (AN6263N)	1
IC_{402}	051-0606-01	IC (KC-819)	1
IC_{301}	051-0714-00	IC (TA7705P)	1
Q_{624}	100-1346-00	Transistor (2SA1346-AC)	1

REF.NO.	PART NO. (ORDER NO.)	DESCRIPTION	Q'TY
R_{314}	111-2711-81	Film resistor (½W270Ω)	1
$C_{301,302,303,304}$	160-1022-05	Ceramic capacitor (50V1000pF B) HD	4
C_{313}	172-6832-20	Polyester capacitor (63V0.068μF) SS	1
$C_{308,309}$	173-1032-10	Polyester capacitor (50V0.01μF) S	2
C_{312}	173-2232-10	Polyester capacitor (50V0.022μF) S	1
$C_{404,406}$	179-1053-62	Electrolytic capacitor (50V1μF) S	2
$C_{402,403,407,408}$	179-1063-32	Electrolytic capacitor (16V10μF) S	4
C_{405}	179-1073-22	Electrolytic capacitor (10V100μF) S	1

REF.NO.	PART NO. (ORDER NO.)	DESCRIPTION	Q'TY
$C_{305,310,601,602}$	183-1063-32	Electrolytic capacitor (16V10μF) USS	4
$C_{306,307}$	183-1073-12	Electrolytic capacitor (6.3V100μF) USS	2

REF.NO.	PART NO. (ORDER NO.)	DESCRIPTION	Q'TY
C_{311}	183-6863-22	Electrolytic capacitor (10V68μF) USS	1

◎MECHANISM P.W.B

REF.NO.	PART NO. (ORDER NO.)	DESCRIPTION	Q'TY
$D_{701\sim704}$	001-0330-00	Diode (1SS119)	4
Q_{705}	100-1048-00	Transistor (2SA1048)	1
$Q_{701,703}$	100-1297-00	Transistor (2SA1297)	2

REF.NO.	PART NO. (ORDER NO.)	DESCRIPTION	Q'TY
$Q_{702,704}$	102-3267-50	Transistor (2SC3267GR,BL)	2
R_{709}	114-2291-11	Film resistor (1W2.2Ω) OM	1
C_{701}	182-1073-32	Electrolytic capacitor (16V100μF) SS	1

◎FM P.W.B Ass'y 880-0005A

REF.NO.	PART NO. (ORDER NO.)	DESCRIPTION	Q'TY
Dd_{100}	001-0365-00	Diode (ZNR)	1
$Dd_{101,102,103}$	001-0384-00	Diode (1SV103)	3
$IFTd_{101}$	005-0944-00	IF-transformer	1
$IFTd_{102,103}$	005-0967-00	IF-transformer	2
$IFTd_{104}$	005-0972-00	IF-transformer	1
Ld_{102}	010-2082-00	Coil	1
Ld_{103}	010-2083-00	Coil	1
Ld_{104}	010-2110-00	Coil	1
Ld_{101}	010-2111-00	Coil	1
ICd_{101}	051-0356-00	IC (AN7254)	1
ICd_{102}	051-0488-02	IC (μPC1245V)	1
Qd_{102}	102-2668-25	Transistor (2SC2668Y)	1
Qd_{101}	124-0114-15	Transistor (2SK114)	1
$Rd_{101,113}$	116-1041-10	Chip resistor (1/8W100kΩ)	2
Rd_{111}	116-2231-10	Chip resistor (1/8W22kΩ)	1
Rd_{104}	116-6831-10	Chip resistor (1/8W68kΩ)	1
Rd_{116}	117-1011-10	Chip resistor (1/16W100Ω) S	1
Rd_{109}	117-1041-10	Chip resistor (1/16W100kΩ) S	1
Rd_{115}	117-1511-10	Chip resistor (1/16W150Ω) S	1
Rd_{119}	117-1831-10	Chip resistor (1/16W(18kΩ) S	1
$Rd_{106,117}$	117-2211-10	Chip resistor (1/16W220Ω) S	2
Rd_{112}	117-3311-10	Chip resistor (1/16W330Ω) S	1
Rd_{122}	117-3321-10	Chip resistor (1/16W3.3kΩ) S	1
Rd_{121}	117-3921-10	Chip resistor (1/16W3.9kΩ) S	1

REF.NO.	PART NO. (ORDER NO.)	DESCRIPTION	Q'TY
Rd_{114}	117-3941-10	Chip resistor (1/16W390kΩ) S	1
Rd_{107}	117-4701-10	Chip resistor (1/16W47Ω) S	1
Rd_{120}	117-5621-10	Chip resistor (1/16W5.6kΩ) S	1
Rd_{118}	117-6821-10	Chip resistor (1/16W6.8kΩ) S	1
Rd_{103}	117-6831-10	Chip resistor (1/16W68kΩ) S	1
$Cd_{105,110}$	171-2233-06	Ceramic capacitor (0.022μF SR) SC	2
Cd_{111}	174-1010-13	Ceramic capacitor (100pF CH) TC	1
Cd_{116}	175-1096-00	Ceramic chip capacitor (1pF CH) TC	1
Cd_{115}	175-1501-00	Ceramic chip capacitor (15pF CH) TC	1
Cd_{101}	175-2201-00	Ceramic chip capacitor (22pF CH) TC	1
Cd_{129}	175-2211-00	Ceramic chip capacitor (220pF CH) TC	1
Cd_{107}	175-5096-00	Ceramic chip capacitor (5pF CH) TC	1
Cd_{102}	175-9097-00	Ceramic chip capacitor (9pF CH) TC	1
Cd_{125}	176-1007-04	Ceramic chip capacitor (10pF CH) TC,S	1
Cd_{103}	176-1011-00	Ceramic chip capacitor (100pF CH) TC,S	1
$Cd_{113,114}$	176-1201-00	Ceramic chip capacitor (12pF CH) TC,S	2
$Cd_{108,112}$	176-6097-00	Ceramic chip capacitor (6pF CH) TC,S	2
Cd_{117}	178-1022-05	Ceramic chip capacitor (1000pF) HD,S	1
$Cd^{106,118,120}_{124,126}$	178-1032-05	Ceramic chip capacitor (0.01μF B) HD,S	5
$Cd^{104,119,122}_{127}$	178-2232-05	Ceramic chip capacitor (0.022μF B) HD,S	4
$Cd_{109,121}$	182-1053-62	Electrolytic capacitor (50V1μF) SS	2
Cd_{123}	182-4743-62	Electrolytic capacitor (50V0.47μF) SS	1
Cd_{128}	183-4763-32	Electrolytic capacitor (16V47μF) USS	1

◎AM-ST TUNER 880-1507B

REF.NO.	PART NO. (ORDER NO.)	DESCRIPTION	Q'TY
D_5	001-0330-00	Diode (1SS-119)	1
$D_{1\sim3}$	001-0402-00	Diode (1SV149AB)	3
D_4	001-0453-00	Diode (1SS237)	1
TH_1	002-0204-00	Thermistor (350Ω TD)	1
$TC_{1,2,3}$	004-1567-00	Trimmer (20pF)	3
IFT_1	005-0951-01	IF-transformer (IFT-1)	1
IFT_2	005-0961-01	IF-transformer (IFT-2)	1
IFT_4	005-0962-00	IF-transformer (10A)	1
IFT_3	005-0963-00	IF-transformer (BFU-450)	1
T_2	005-0973-00	IF-transformer (T-2 2ND)	1

REF.NO.	PART NO. (ORDER NO.)	DESCRIPTION	Q'TY
T_1	010-2112-00	Coil (T-1 1ST)	1
L_1	010-2113-00	Coil (L-1 5μH)	1
T_3	010-2114-00	Coil (T-3 OSC)	1
VR_1	012-3808-07	Variable resistor (22kΩ)	1
IC_2	051-0630-00	IC (MC13020P)	1
IC_1	051-0634-00	IC (LA1135)	1
CF_1	060-0112-00	Ceramic resonator (CSA3-6M17)	1
$Q_{1,3,4}$	102-2458-25	Transistor (2SC2458Y)	3
$Q_{5,9}$	102-2670-15	Transistor (2SC2670O)	2
$Q_{6,7}$	102-2715-15	Transistor (2SC2715-O)	2

REF.NO.	PART NO. (ORDER NO.)	DESCRIPTION	Q'TY
Q_2	108-0435-51	FET (2SK435-CD)	1
Q_8	108-0494-02	FET (2SK494B)	1
R_{28}	117-1021-10	Chip resistor (1/16W1kΩ) S	1
$R_{14,15,18,20}$	117-1031-10	Chip resistor (1/16W10kΩ) S	4
R_{36}	117-1041-10	Chip resistor (1/16W100kΩ) S	1
R_{11}	117-1211-10	Chip resistor (1/16W120Ω) S	1
$R_{29,31}$	117-1521-10	Chip resistor (1/16W1.5kΩ) S	2
R_{13}	117-2201-10	Chip resistor (1/16W22Ω) S	1
R_{22}	117-2211-10	Chip resistor (1/16W220Ω) S	1
R_{39}	117-2221-10	Chip resistor (1/16W2.2kΩ) S	1
R_{34}	117-2241-10	Chip resistor (1/16W220kΩ) S	1
R_6	117-2711-10	Chip resistor (1/16W270Ω) S	1
R_{12}	117-3311-10	Chip resistor (1/16W330Ω) S	1
$R_{16,37}$	117-3321-10	Chip resistor (1/16W3.3kΩ) S	2
R_{30}	117-4311-10	Chip resistor (1/16W430Ω) S	1
R_3	117-4701-10	Chip resistor (1/16W47Ω) S	1
$R_{27,38}$	117-4711-10	Chip resistor (1/16W470Ω) S	2
$R_{17,32}$	117-4721-10	Chip resistor (1/16W4.7kΩ) S	2
R_{35}	117-5631-10	Chip resistor (1/16W56kΩ) S	1
R_{25}	117-6821-10	Chip resistor (1/16W6.8kΩ) S	1
R_9	117-7501-10	Chip resistor (1/16W75Ω) S	1
R_{21}	117-8201-10	Chip resistor (1/16W82Ω) S	1
R_{33}	117-9111-10	Chip resistor (1/16W910Ω) S	1

REF.NO.	PART NO. (ORDER NO.)	DESCRIPTION	Q'TY
C_{37}	043-0204-00	Ceramic capacitor (50p)	1
C_2	171-1533-06	Ceramic capacitor (0.015μF) SC	1
C_{43}	173-3322-10	Ceramic capacitor (0.0033μF) S	1
C_{12}	174-1000-13	Ceramic capacitor (10pF CH) TC	1
C_{13}	176-4311-00	Ceramic chip capacitor (430pF CH) TC,S	1
C_{11}	177-4732-05	Ceramic chip capacitor (0.047μF) HD	1
$C_{5,30}$	178-1022-05	Ceramic chip capacitor (1000pF) HD,S	2
$C_{17,22,26,38}$	178-1032-05	Ceramic chip capacitor (0.01μF) HD,S	4
C_3	178-1045-06	Ceramic chip capacitor (0.1μF) HD,S	1
$C_{1,8,9,10,14,21,23,27,29}$	178-2232-05	Ceramic chip capacitor (0.022μF) HD,S	9
$C_{40,41,42}$	178-3322-05	Ceramic chip capacitor (0.0033μF) HD,S	3
C_6	178-4735-06	Ceramic chip capacitor (0.047μF) HD,S	1
C_{25}	042-0199-00	Electrolytic capacitor (10V22μF TAN)	1
$C_{20,39}$	042-0200-00	Electrolytic capacitor (10V47μF TAN)	2
$C_{35,36}$	042-0230-00	Electrolytic capacitor (35V0.47μF TAN)	2
C_{16}	042-0239-00	Electrolytic capacitor (16V1μF TAN)	1
C_{15}	182-1053-62	Electrolytic capacitor (50V1μF) SS	1
$C_{28,34}$	182-1063-32	Electrolytic capacitor (16V10μF) SS	2
C_{24}	182-1073-22	Electrolytic capacitor (10V100μF) SS	1
$C_{31,33}$	182-2253-62	Electrolytic capacitor (50V2.2μF) SS	2
C_{18}	182-3353-62	Electrolytic capacitor (50V3.3μF) SS	1
C_4	182-3363-12	Electrolytic capacitor (6.3V33μF) SS	1
$C_{19,32}$	182-4753-52	Electrolytic capacitor (35V4.7μF) SS	2

◎N.C MPX BLOCK Ass'y 880-0302B

REF.NO.	PART NO. (ORDER NO.)	DESCRIPTION	Q'TY
VR_1	012-4318-06	Variable resistor (10kΩ)	1
CCT_1	050-0099-50	Component circuit (PA-S-160)	1
IC_1	051-0407-00	IC (LA2110)	1
IC_2	051-0733-01	IC (LA3430)	1
X_1	060-0115-01	Ceramic resonator (CSB456F11)	1
R_1	116-1021-10	Chip resistor (1/8W1kΩ)	1
R_2	116-1041-10	Chip resistor (1/8W100kΩ)	1
R_4	116-1831-10	Chip resistor (1/8W18kΩ)	1
$R_{5,7}$	116-2221-10	Chip resistor (1/8W2.2kΩ)	2
R_9	116-2231-10	Chip resistor (1/8W22kΩ)	1
R_6	116-3321-10	Chip resistor (1/8W3.3kΩ)	1
R_8	116-3331-10	Chip resistor (1/8W33kΩ)	1

REF.NO.	PART NO. (ORDER NO.)	DESCRIPTION	Q'TY
R_{10}	116-4721-10	Chip resistor (1/8W4.7kΩ)	1
R_3	116-6821-10	Chip resistor (1/8W6.8kΩ)	1
C_6	171-2223-76	Ceramic capacitor (0.0022μF SR) SC	1
C_9	171-4723-76	Ceramic capacitor (0.0047μF SR) SC	1
$C_{2,3}$	177-1032-05	Ceramic chip capacitor (0.01μF) HD	2
C_{10}	177-2232-05	Ceramic chip capacitor (0.022μF) HD	1
C_8	177-4732-05	Ceramic chip capacitor (0.047μF) HD	1
C_4	177-6822-05	Ceramic chip capacitor (6800pF) HD	1
$C_{11,14}$	182-1053-62	Electrolytic capacitor (50V1μF) SS	2
C_{13}	182-2243-62	Electrolytic capacitor (50V0.22μF) SS	1
C_5	182-2263-22	Electrolytic capacitor (10V22μF) SS	1
$C_{1,7,12}$	182-4753-52	Electrolytic capacitor (35V4.7μF) SS	3

Note : OM (Oxidized Metal)
S (Small)
HD (Higher Dielectric)
SC (Semi-Conductor)
SS (Super Small)
TC (Temperature-Compensating)
LL (Low Leak)
USS (Ultra Super Small)

■EXPLODED VIEW • PARTS LIST:

◎Main section

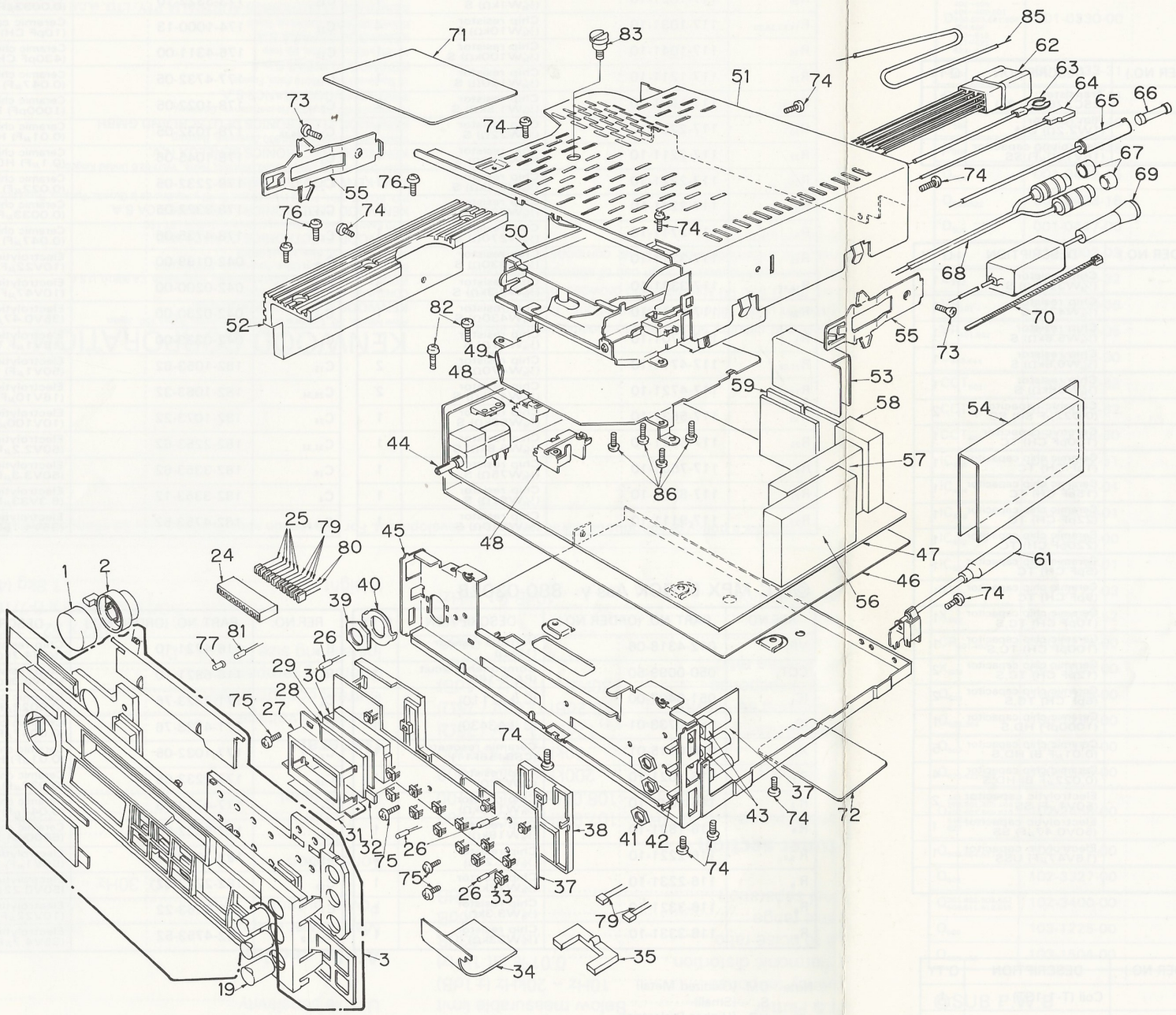

REF.NO.	PART NO. (ORDER NO.)	DESCRIPTION	Q'TY
1	380-4729-00	Knob	1
2	380-4731-00	Knob	1
3	940-0665A	Escutcheon ass'y (PE-9102A)	1
	940-0687A	Escutcheon ass'y (PE-9125A)	1
	940-0688A	Escutcheon ass'y (PU-9125A)	1
19	380-4294-08	Knob (BASS/TRE)	3

REF.NO.	PART NO. (ORDER NO.)	DESCRIPTION	Q'TY
24	335-2320-00	LED holder	1
25	001-0371-01	LED (Green)	6
26	017-0345-09	Pilot lamp	4
27	330-8491-00	LCD holder	1
28	379-0108-00	Indicator (LCD)	1
29	335-2329-00	Reflector	1

REF.NO.	PART NO. (ORDER NO.)	DESCRIPTION	Q'TY
30	335-2145-01	Illumination plate	1
31	099-7561-00	P.W.B	1
32	345-4190-00	Spacer	1
33	013-3694-00	Switch	15
34	099-7764-00	P.W.B	1
35	345-4324-00	LED holder	1

REF.NO.	PART NO. (ORDER NO.)	DESCRIPTION	Q'TY
37	099-7763-01	P.W.B	1
38	335-2322-00	P.W.B holder	1
39	722-0020-00	Nut	1
40	330-7865-00	Adjustable washer	1
41	722-0332-00	Nut	3
42	012-4516-00	Variable resistor	1
43	012-4515-00	Variable resistor	2
44	012-4517-00	Variable resistor (VOL)	1
45	311-1248-00	Lower case	1
46	347-2172-00	Insulator	1
47	099-7762-01	P.W.B	1
48	330-8492-00	IC holder	2
49	330-8493-00	Mechanism bracket	1
50	930-0530-01	Tape mechanism	1
51	310-1286-01	Upper case	1
52	313-1276-00	Heat sink	1
53	347-2173-01	Insulator	1
54	347-2174-01	Insulator	1
55	750-2486-00	Spring	2
56	051-0777-03	IC (DOLBY)	1
57	880-1507B	Tuner pack (AM)	1
58	880-0005A	Tuner pack (FM)	1
59	880-0302B	NC/MPX block	1
61	092-0588-00	Antenna receptacle	1
62	851-2486-00	SP-lead	1
63	840-0424-00	Bonding wire	1
64	850-2138-01	A-lead	1
65	850-2092-01	A-lead	1
66	120-0070-00	Fuse (7A)	1
67	345-3799-00	Cap	2
68	852-7815-03	Extension lead	1
69	009-0626-10	Choke	1
70	335-0833-01	Clamp	1
71	285-1264-01	Guide label	1
72	286-5861-00	Set plate(PE-9102A)	1
	286-5861-01	Set plate(PE-9125A)	1
	286-5861-02	Set plate(PU-9125A)	1
73	714-3006-41	Machine screw (M3x6)	2
74	714-3004-81	Machine screw (M3x4)	10
75	714-2610-81	Machine screw (M2.6x10)	4
76	714-3008-80	Machine screw (M3x8)	3
77	345-2830-46	P.L cap	1
79	001-0371-03	LED (Orange)	6
80	001-0371-00	LED (Red)	2
81	017-0361-01	Pilot lamp	1
82	714-3004-11	Machine screw (M3x4)	2
83	716-0706-00	Lock screw	1
85	850-2288-00	A-lead	1
86	714-3003-81	Machine screw (M3x3) (MECH)	4

9425RT·9000E

■EXPLODED VIEW • PARTS LIST:

◎Tape mechanism section

①960-3640-09 Side-P-sub ass'y

NO	PART NO	DESCRIPTION	Q'TY
1	960-3610-06	SIDE PANEL-ASS'Y	1
2	960-3623-05	PL-LINK-A-ASS'Y	1
3	960-3624-06	PL-LINK-B-ASS'Y	1
4	750-2408-00	PL-SPRING-A	1
5	750-2409-02	PL-SPRING-B	1
6	714-2606-11	MACHINE SCREW (M2 6x6)	2
7	716-0670-00	SCREW	1
8	743-1500-10	E-RING	2
9	013-3757-00	SWITCH	1
10	015-0232-02	PLUNGER	1
11	803-0608-60	VINYL-COAT-WIRE	1
12	804-0605-60	VINYL-COAT-WIRE	2
13	805-0609-60	VINYL-COAT-WIRE	2
14	015-0238-00	PLUNGER	1

②960-3639-05 Frame-sub ass'y

NO	PART NO	DESCRIPTION	Q'TY
1	960-3611-02	FRAME ASS'Y	1
2	960-3619-03	EJ-ARM-P-ASS'Y	1
3	630-1758-03	EJ-RACK PLATE	1
4	960-3621-03	SW-LINK-ASS'Y	1
5	960-3620-04	SWING-P-ASS'Y	1
6	820-3005-02	VINYL-TUBE	1
7	960-3618-02	EJECT-P-ASS'Y	1
8	613-0076-01	EJECT GEAR	1
9	613-0075-01	SWING GEAR	1
10	750-2404-00	EJ-RACK SPRING	1
11	750-2419-01	EJ-GEAR SPRING	1
12	099-7435-02	P.W.B	1
13	076-0277-06	PLUG	1
14	076-0277-02	PLUG	1
15	013-2690-05	SWITCH	1
16	013-3757-00	SWITCH	1
17	013-3780-00	SWITCH	1
18	806-0607-00	VINYL-COAT-WIRE	1
19	610-0268-00	EJECT ROLLER	2
20	716-0670-00	SCREW	1
21	714-2308-11	MACHINE SCREW (M2 3x8)	1
22	716-0656-00	SCREW	1
23	716-0485-00	SCREW	1
24	714-2604-81	MACHINE SCREW (M2 6x4)	1
25	743-1500-10	E-RING	5
26	743-2000-10	E-RING	1
27	746-0761-00	WASHER	2
28	746-0762-00	WASHER	1
29	745-0586-00	WASHER	1

③960-3641-07 Reel-B-sub ass'y

NO	PART NO	DESCRIPTION	Q'TY
1	960-3613-05	REEL BASE-P-ASS'Y	1
2	613-0061-01	POWER GEAR A	1
3	613-0062-00	POWER GEAR B	1
4	613-0066-01	P-IDLER GEAR	1
5	613-0063-00	POWER GEAR C	1
6	613-0064-01	POWER GEAR D	1
7	613-0065-00	POWER GEAR E	1
8	613-0069-00	IDLER GEAR	2
9	960-3634-02	REEL BASE-F-ASS'Y	1
10	960-3635-02	REEL BASE-R-ASS'Y	1
11	746-0761-00	WASHER	7
12	746-0762-00	WASHER	3
13	746-0712-01	WASHER	2
14	013-3707-00	SWITCH	2
15	802-0615-60	VINYL-COAT-WIRE	1
16	801-0615-60	VINYL-COAT-WIRE	1
17	099-7216-02	P.W.B	1
18	111-1021-91	FILM RESISTOR (1/4Wss1k(Ω))	1
19	745-0678-01	WASHER	3

REF.NO.	PART NO. (ORDER NO.)	DESCRIPTION	Q'TY
1	960-3609-04	Guide arm ass'y	1
2	960-3612-04	Head plate ass'y	1
3	960-3617-00	Flywheel-P ass'y	1
4	960-3626-02	Timing-P ass'y	1
5	960-3627-04	Power-P ass'y	1
6	960-3628-01	P-lock-P ass'y	1
7	960-3631-03	Power link ass'y	1
8	960-3632-02	REW-link ass'y	1
9	960-3738-00	Roller-F ass'y	1
10	960-3739-00	Roller-R ass'y	1
11	960-3638-05	Deck plate ass'y	1
12	960-3639-05	Frame-sub ass'y ②	1
13	960-3640-09	Side-P-sub ass'y ①	1
14	960-3641-07	Reel-B-sub ass'y ③	1
15	960-3642-03	CH-gear ass'y	1
16	960-3643-02	Pack-ST ass'y	1
17	990-0614-01	P.W.B ass'y	1
18	011-0291-04	Head	1
19	SMA-105-100	DC motor ass'y	1
20	335-0833-01	Lead holder	1
21	602-0091-01	Belt-A	1
22	602-0092-02	Belt-B	1
23	750-2421-00	Change-A spring	1
24	604-0029-01	Tension pulley	1
25	606-0079-05	Pack guide	1
26	610-0266-00	Cam roller	1
27	610-0267-00	Guide roller	1
28	610-0281-00	Head-P-roller	1
29	610-0282-00	H-P-roller B	1
30	611-0072-02	Flywheel	2
31	613-0060-01	Pulley gear	1
32	613-0067-04	Cam gear	1
33	613-0070-00	FF-gear	2
34	613-0071-00	Loading gear-A	1
35	613-0072-00	Loading gear-B	1
36	613-0073-00	Loading gear-C	1
37	613-0074-00	Loading gear-D	1
38	630-1759-03	Eject arm	1
39	630-1760-02	Change plate	1
40	630-1761-00	Change arm	1
41	630-1762-02	Head lock plate	1
42	630-1763-01	FF-link	1
43	631-0461-01	Azimuth link	1
44	714-2003-81	Machine screw (M2x3)	6
45	714-2603-81	Machine screw (M2 6x3)	2
46	714-2604-81	Machine screw (M2 6x4)	2
47	716-0347-00	Screw (MOTOR)	2
48	716-0485-00	Screw (P.W.B)	1
49	716-0654-01	Screw (AZIMUTH)	2
50	743-1500-10	E-ring	7
51	743-2000-10	E-ring	4
52	743-2500-10	E-ring	4
53	744-0031-10	E-ring	4
54	744-0028-00	Snap retainer	1
55	745-0646-00	Washer (FLYWHEEL)	2
56	746-0624-00	Washer	2
57	746-0761-00	Washer	9
58	750-2422-03	Roller spring	1
59	746-0747-00	Washer (BEARING)	2
60	750-2405-02	Loading spring	1
61	750-2406-03	Head-P-spring	1
62	750-2407-03	P-link spring	1
63	750-2410-00	G-lock spring	1
64	750-2411-00	Timing spring	1
65	750-2412-00	Power-P-spring	1
66	750-2413-00	P-lock spring	1
67	750-2414-02	FF-spring	1
68	750-2415-01	REW-spring	1
69	750-2416-01	Brake spring	1
70	750-2418-02	EJ-arm spring-B	1
71	750-2420-00	Azimuth spring	1

9425RT•9000E

■CIRCUIT DIAGRAM:

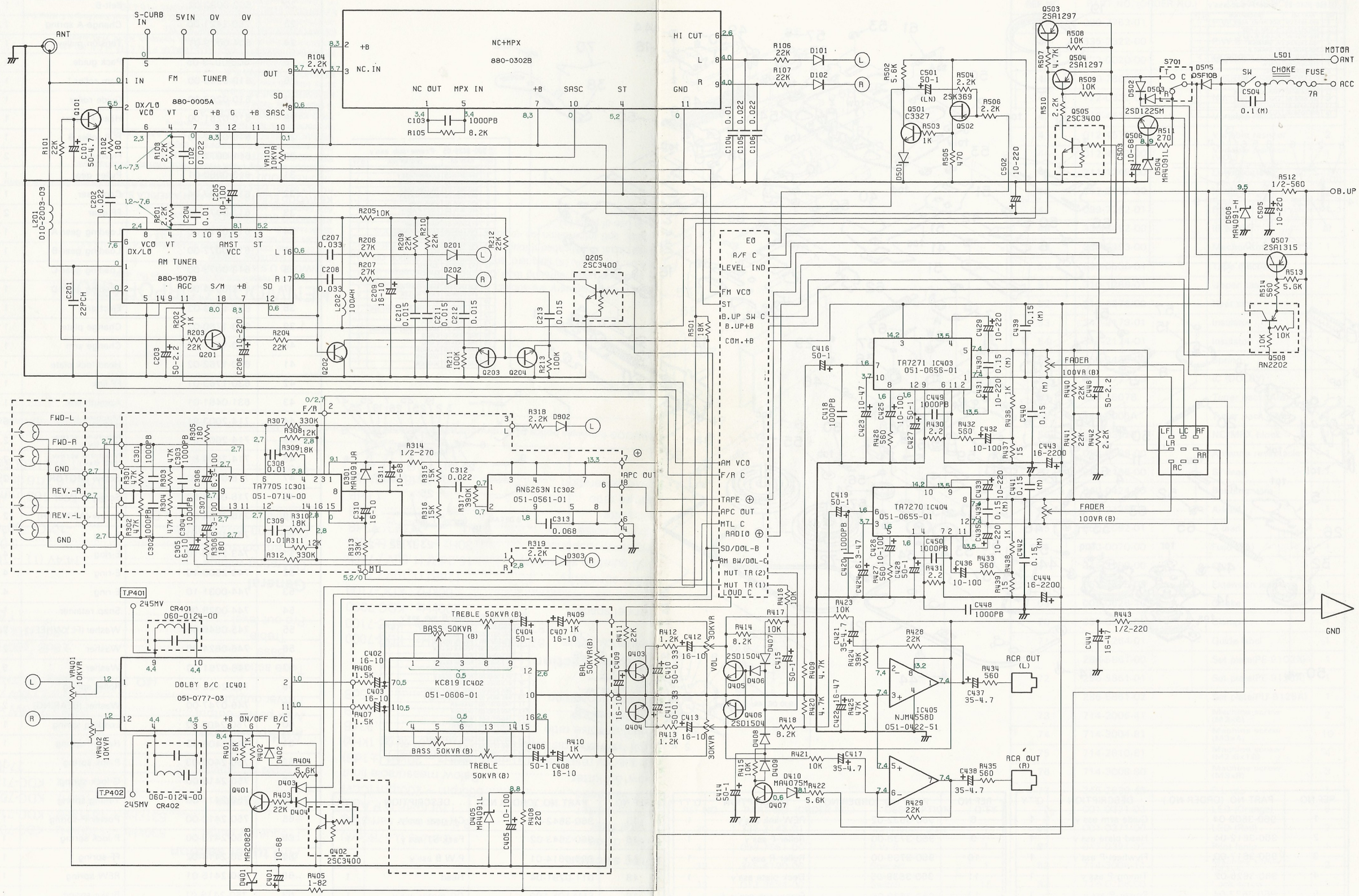

9425RT·9000E

■CIRCUIT DIAGRAM:

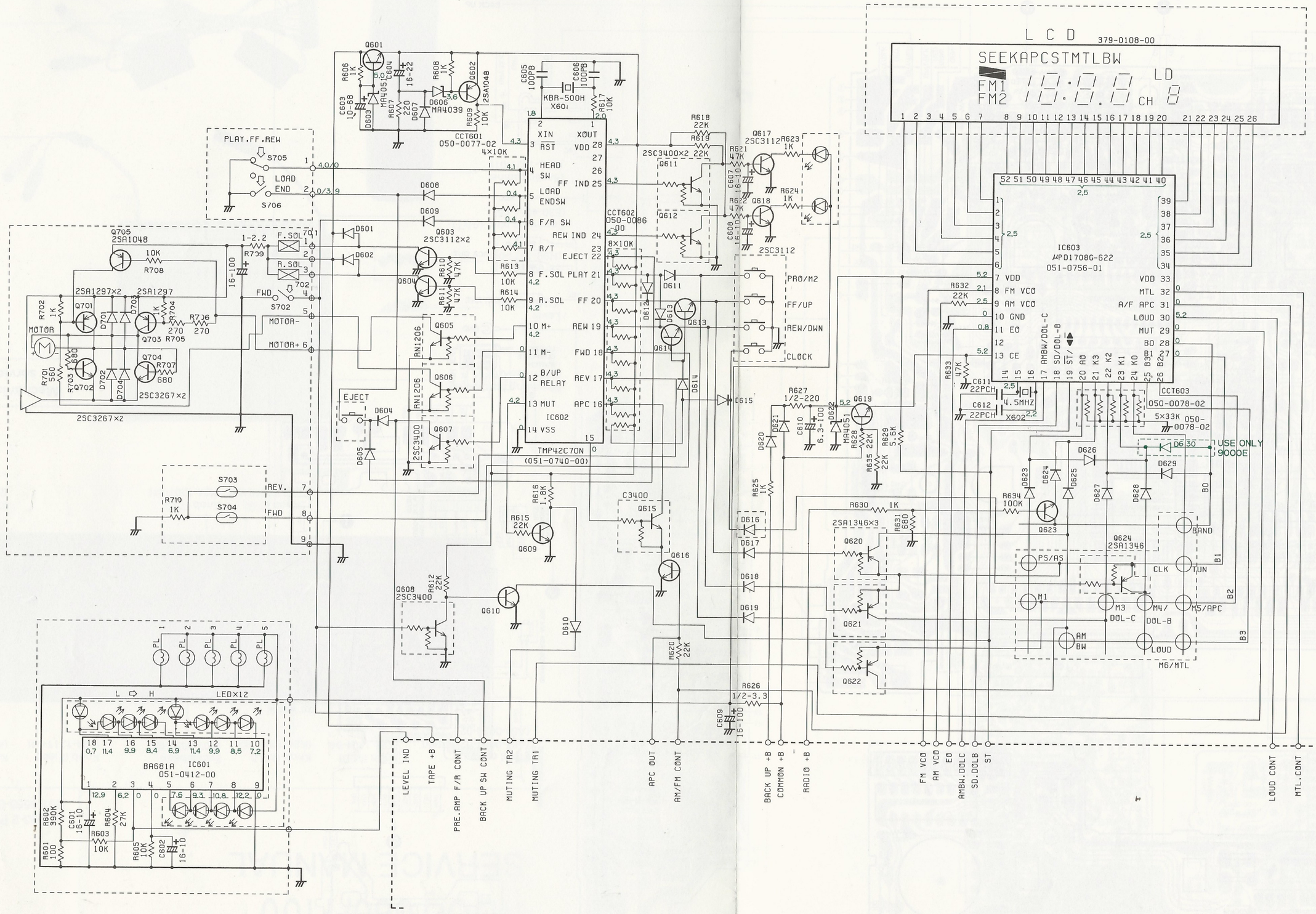

9425RT·9000E

N.C MPX BLOCK:

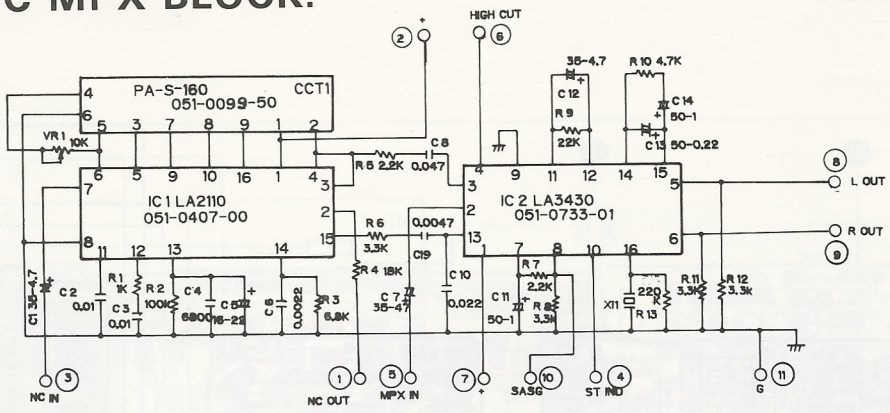

AM-ST TUNER: 880-1507B

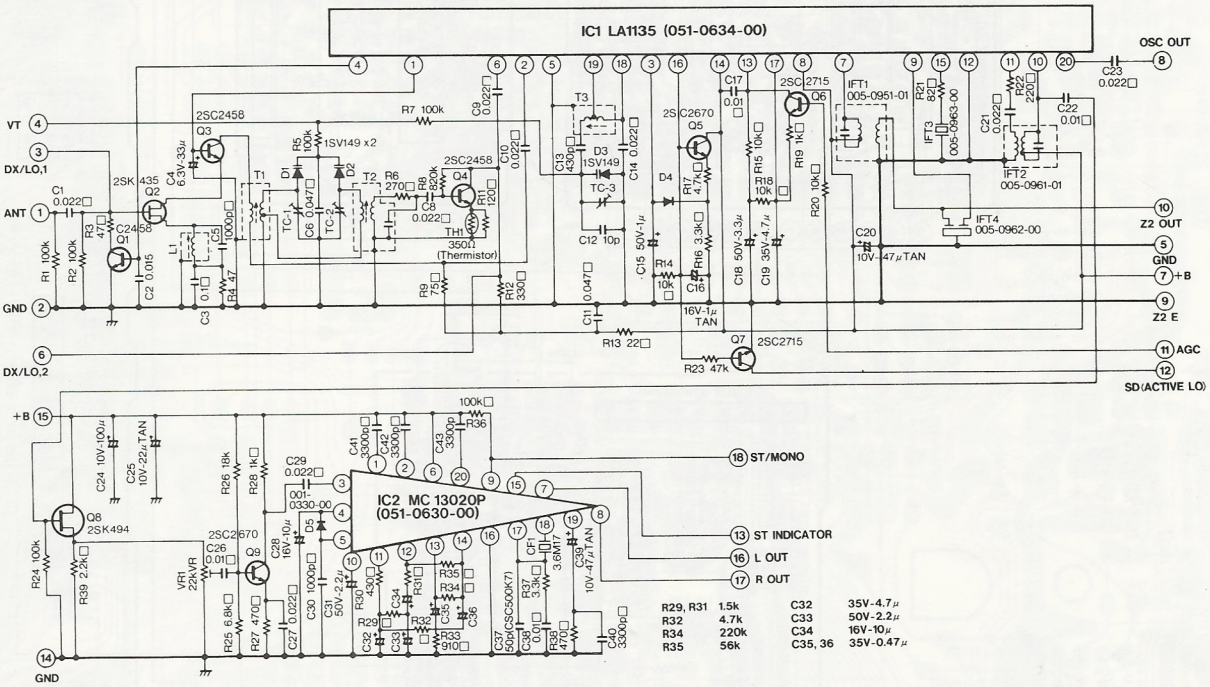

FM TUNER: 880-0005A

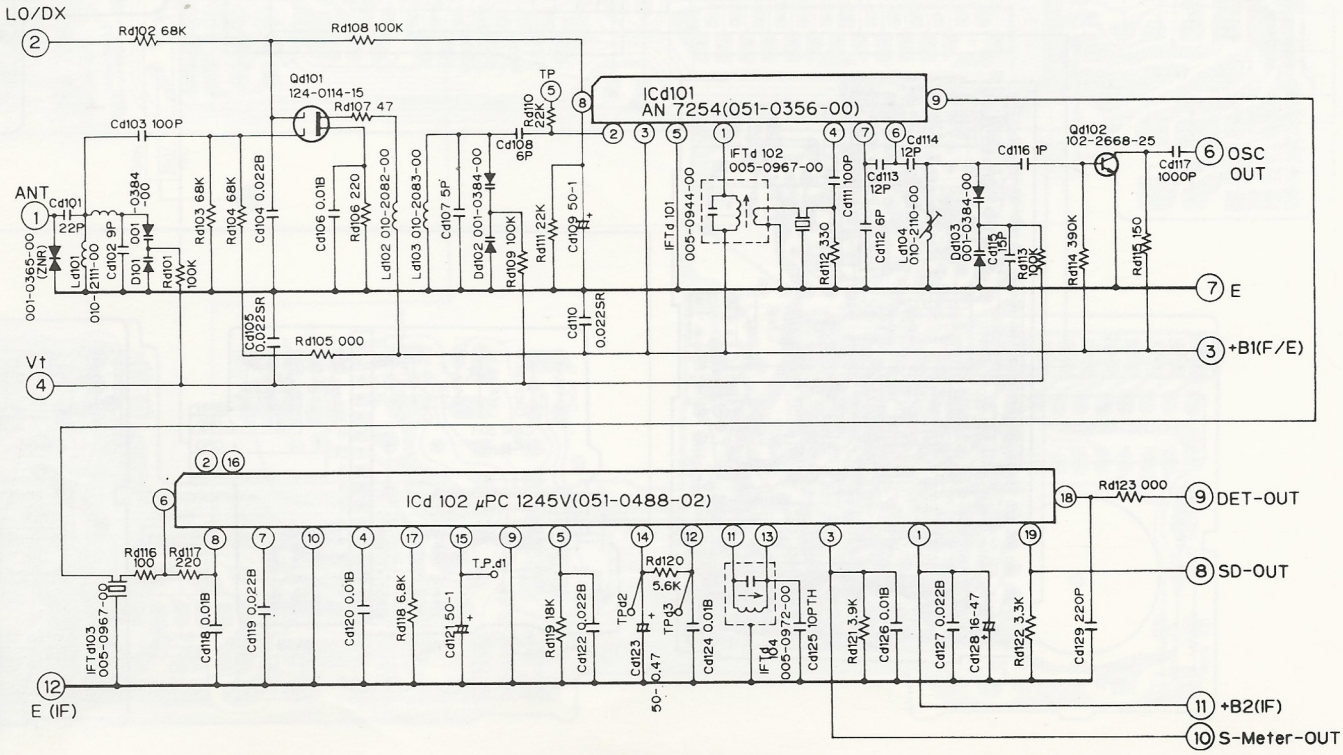

■PRINTED WIRING BOARD:

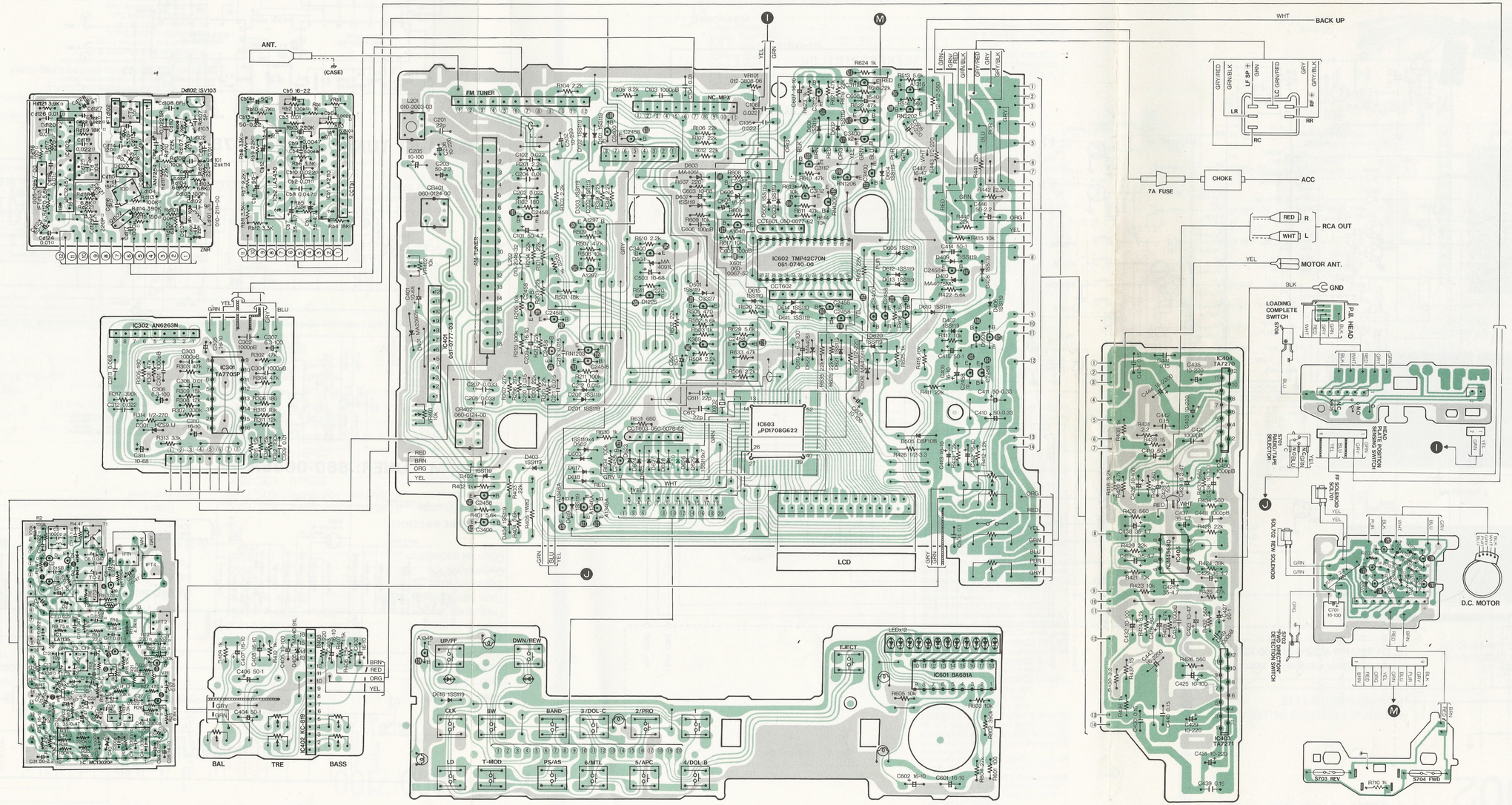

Printed in Japan 298-3493-00 JUL. 1986 ©