eurovox

SERVICE MANUAL

COMPUTERISED FULLY PROGRAMMABLE RADIO CASSETTE CD AUTO CHANGER CONTROL

with Long Range, High Power, Dolby B and C NR Auto Store Memories

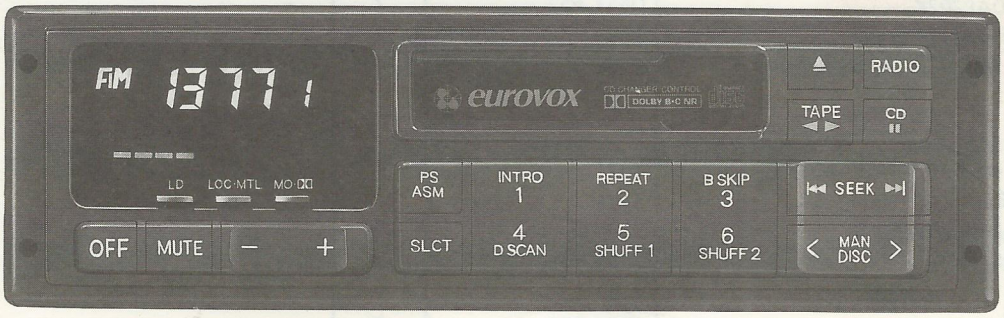

9280

Printed in Japan Jun. '90 Modification Reserved

GENERAL INFORMATION

SEMICONDUCTORS: 29 ICs, 2 FETs, 50 Transistors, 59 Diodes, 22 LEDs, 2 Photo sensors

DESCRIPTION	REF. NO.	Q'TY	EQUIVALENT
(AM radio)			
AM IC LA1137	V703	1	
Radio Frequency amplifier FET 2SK1070	V701	1	
RF AGC transistor 2SC2712(GR)	V702	1	
Switching transistor 2SC2712(G)	V731, 732	2	2SC2462, 2SC1623
Switching transistor 2SA1162(Y)	V733	1	2SA812, 2SA1179, 2SA1121
Switching diode 1SV172	D701	1	
Switching diode HSM221	D702, 703	2	
Varactor diode SVC351	D704	1	
Switching diode HSM2838	D705	1	
Level shift diode MA165	D731, 732	2	
(FM radio)			
FM IC LA1175	V603	1	
FM IF IC LA1145	V604	1	
FM NB, MPX IC STK3400A	V651	1	
PLL controller IC LM7001	V905	1	
Radio frequency amplifier FET 3SK195	V602	1	
Switching transistor DTC144EK	V601	1	
Switching transistor 2SC2712(Y)	V652	1	
Switching transistor 2SA1162(Y)	V653	1	2SA812, 2SA1179, 2SA1121
Switching transistor DTA124EK	V654, 903	2	
Switching transistor 2SB1122(T)	V655	1	2SB1073, 2SB1188
Low pass filter transistor 2SC2712(G)	V901, 902	2	2SC2462, 2SC1623
Switching transistor DTC124EK	V904	1	
Voltage regulator transistor 2SC1615(GL)	V906	1	2SD1626, 2SD1638, 2SD1898
Noise suppressor diode 1SS133	D601, 602	2	1S1588, 1S2076, MA165, GMA-01
Switching diode 1SV172	D603	1	
Varactor diode 1SV225	D604, 605, 606	3	
Level shift diode DAP202K	D651, 652	2	
Zener diode HZS9.1N(B2)	D901	1	
Voltage regulator zener diode HZS5.6N(B2)	D902	1	
(Audio)			
Tape amplifier & auto reverse IC TA7705F	V101	1	
CD input buffer IC M5218FP	V102	1	
Analog switch IC μPD4066BG	V103	1	
Buffer IC M5228FP	V105, 106, 108	3	
Electronic volume IC LC7537AN	V107	1	
Power amplifier IC AN7173K	V151, 351	2	
Dolby B/C IC HA12088ANT	V501	1	
Switching transistor DTA124EK	V104	1	
Switching transistor 2SD596D(V3)	V109, 209, 309, 409	4	2SD1048, 2SD1101, 2SD602
Switching transistor DTC124EK	V917, 918, 919, 920, 921, 925	6	
Switching transistor 2SA1162(Y)	V924	1	
Zener diode HZS4.3N(B2)	D102, 202	2	
Level shift diode MA165	D913	1	1SS133, 1S1588, 1S2076, GMA-01

INPUT AND OUTPUT

Indication	For Connection of:	Sensitivity	Impedance	Type of Socket	Connections
Antenna receptacle	Car radio aerial	1μV-3V	75 ohm	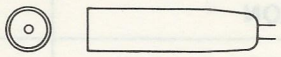	Aerial
13P socket	CD auto changer unit	1. DC 14V 2. DC 14V 3. 0V 4. – 5. 300-2000mV 6. – 7. 300-2000mV 8. – 9. – 10. – 11. – 12. – 13. –	5. 10k ohm 7. 10k ohm	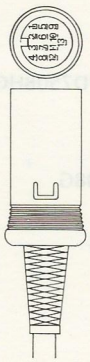	1. ACC 14V 2. Back up 3. GND 4. Dispsel output 5. Right channel input 6. Reset input 7. Left channel input 8. Mute input 9. GND 10. Data input 11. Data output 12. Clock input 13. Clock output
13P plug	Output speaker Left CH and Right CH	1-2. 15W 3-4. 15W 5-6. 15W 7-8. 15W	4 ohm	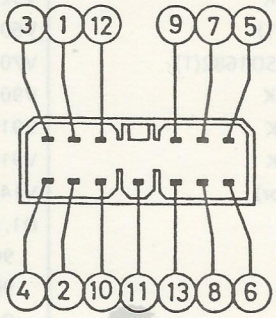	1. Front left speaker (+) 2. Front left speaker (–) 3. Front right speaker (+) 4. Front right speaker (–) 5. Rear left speaker (+) 6. Rear left speaker (–) 7. Rear right speaker (+) 8. Rear right speaker (–) 13. Ground
	Small light switch	9. –	9. –		9. Dimmer
	+14V Car accessory fusebox	12. 14V DC	12. –		12. ACC +14V DC (Input)
	+14V Car battery	10. 14V DC	10. –		10. Back up +14V (Input)
	Electric antenna	11. 14V DC (Max. 500mA)	11. –		11. 14V (Output)
RCA socket	Power amplifier unit	1. 200mV 2. 0V	1-2. 10k ohm	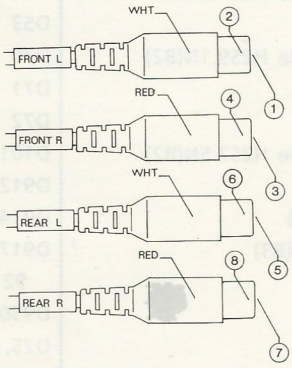	1. Front left (+) 2. Front left (–)
		3. 200mV 4. 0V	3-4. 10k ohm		3. Front right (+) 4. Front right (–)
		5. 200mV 6. 0V	5-6. 10k ohm		5. Rear left (+) 6. Rear left (–)
		7. 200mV 8. 0V	7-8. 10k ohm		7. Rear right (+) 8. Rear right (–)

CIRCUIT FUNCTION DIAGRAM

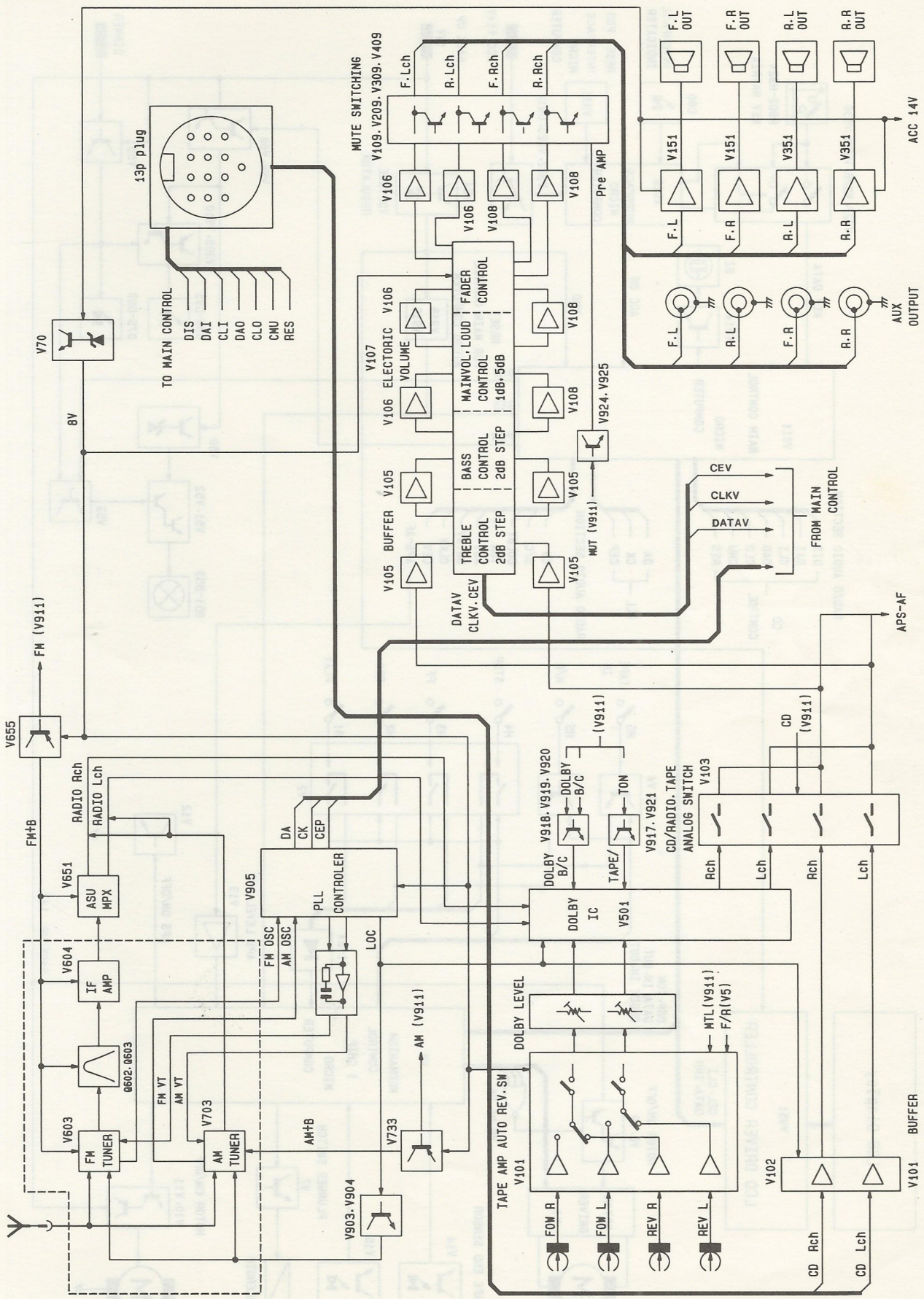

CIRCUIT FUNCTION DIAGRAM

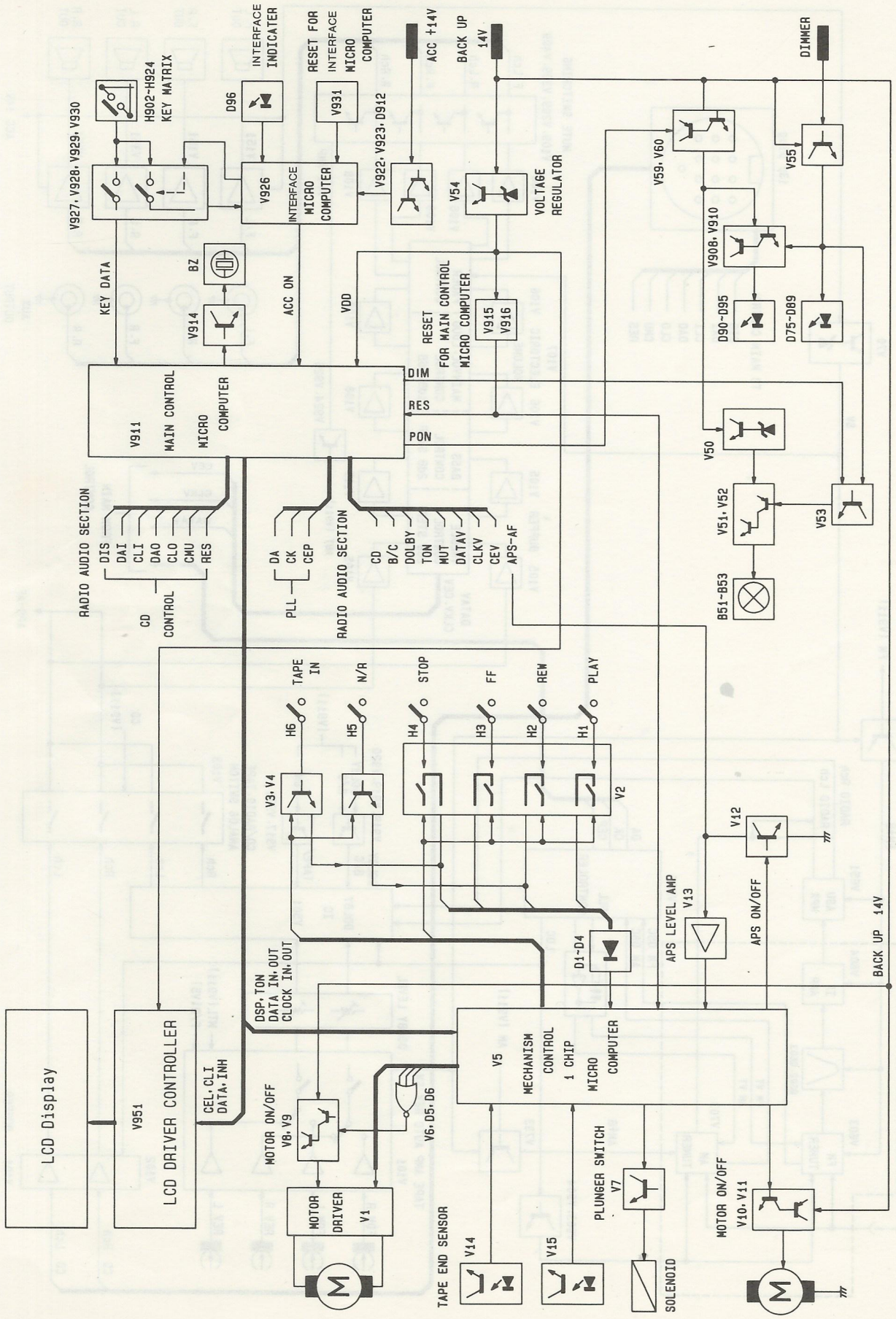

SERVICE ALIGNMENT PROCEDURE

FM circuit

Equipment Required

1. AC V.T.V.M.
2. Stabilized power supply (DC 14V)
3. FM RF Signal generator
4. Stereo modulator
5. DC Voltage meter (Zi ≧ 100k ohm/V)

Cautions during repair

When the front end is defective, replace it by a new one because its internal block is difficult to repair.

FM MPX Circuit alignment

(a) Alignment of Pilot cancel

(1) Connect FM RF S.G. to the antenna of the receiver through dummy antenna, and AC V.T.V.M. to the speaker output of either channel.

(2) Set the output level of FM RF signal generator to 1mV, and set the modulator to 75kHz deviation (10% for pilot signal and 90% for 1kHz main signal L + R).
Tune the frequency of FM RF signal generator to 98MHz and the receiver to 98MHz.

(3) Adjust the volume control to the standard output of 1W.

(4) Turn off the main signal L + R of the stereo modulator, and adjust R655 to make the indication of AC V.T.V.M. minimum. If the positions of R655 at L and R channels are not the same, perform adjustment to make the positions for both channels nearly equal.

(b) Adjustment of stereo separation

(1) Connect MPX filter (19kHz, 38kHz Null Filter) between the speaker output and AC V.T.V.M.

(2) Tune the mode selector of the stereo modulator to the R channel. Align trimmer resistor R656 to obtain maximum separation.
In case L channel is selected by the mode selector, also perform the adjustment similarly. If the trimmer resistor R656 of the mode selector is set in different positions for R and L channels, align it so that equal separation can be obtained on both channels.

(c) Adjustment of FM search stop sensitivity
Connect the DC voltage meter to TP1.
Set the frequency of FM RF signal generator to 98MHz and set the output to 1 4μV. While observing DC voltage meter, align trimmer resistor R615. The alignment is made until the indication of DC voltage is of approximately 5V. Refer to Fig. 1, 3.

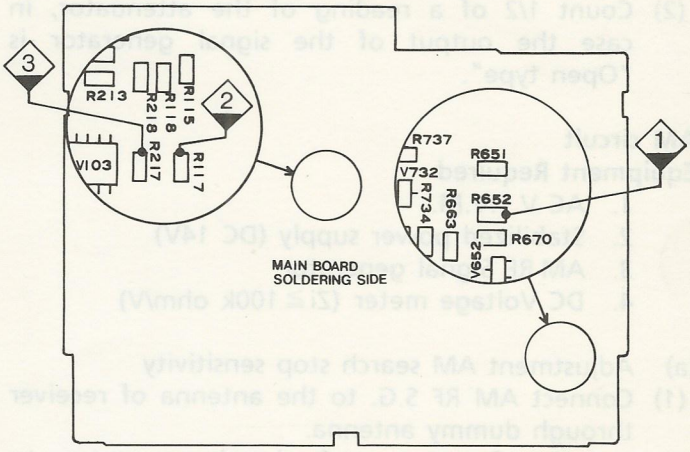

Fig. 1

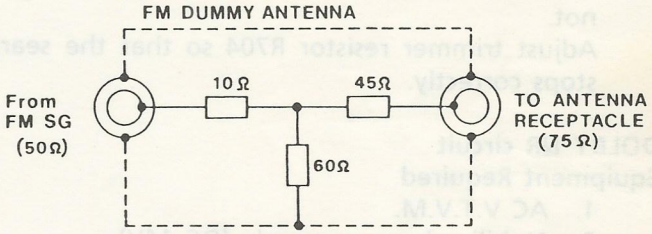

Fig. 2

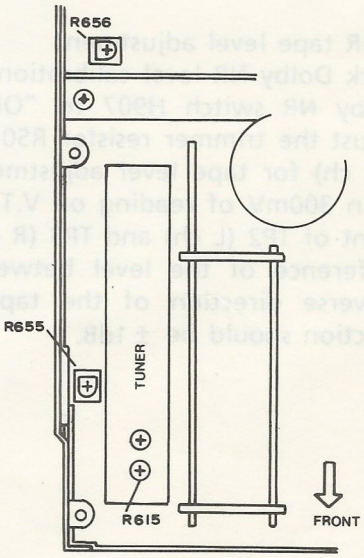

Fig. 3

Note: Regarding relationship between a signal output level and a reading of the signal generator,

(1) Count directly a reading of the attenuator, in case the output of the signal generator is "Load type".

(2) Count 1/2 of a reading of the attenuator, in case the output of the signal generator is "Open type".

AM circuit

Equipment Required

1. AC V.T.V.M.
2. Stabilized power supply (DC 14V)
3. AM RF Signal generator
4. DC Voltage meter (Zi ≧ 100k ohm/V)

(a) Adjustment AM search stop sensitivity

(1) Connect AM RF S.G. to the antenna of receiver through dummy antenna.

(2) Set the frequency of signal generator to 999kHz exactly and set the output to 40μV.
Perform auto search, and then confirm wheather search stop is conducted correctly or not.
Adjust trimmer resistor R704 so that the search stops correctly.

DOLBY NR circuit

Equipment Required

1. AC V.T.V.M.
2. Stabilized power supply (DC 14V)
3. Dolby NR level calibration tape (TEAC MTT-150 or equivalent)

(A) Dolby NR tape level adjustment

(a) Play back Dolby NR level calibration tape.

(b) Set Dolby NR switch H907 to "OFF" position and adjust the trimmer resistor R501 (L ch) and R551 (R ch) for tape level adjustment in order to obtain 300mV of reading on V.T.V.M. at the test point of TP2 (L ch) and TP3 (R ch).

(c) The difference of the level between Forward and Reverse direction of the tape transport/reproduction should be ± 1dB.

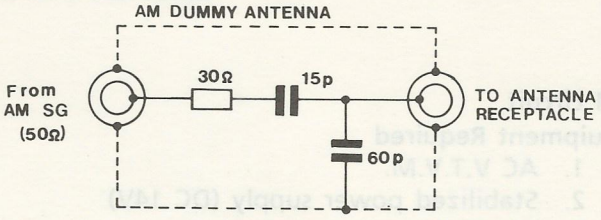

Fig. 4

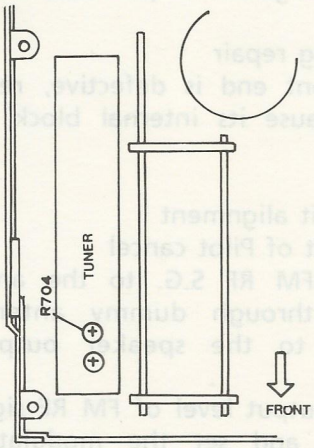

Fig. 5

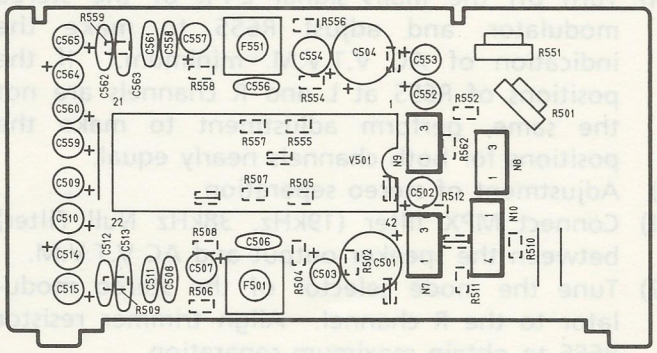

Fig. 6

1. μPD75108G

a. Description

Pin No.	Name	I/O	Description
1	DAT O	O	DATA output terminal to external RAM. Goes low during ACC OFF and ALL OFF. Low is output when there is no initial diode MNOS.
2	RAM ON	O	External RAM's power switching output terminal. Power is turned on for low output and turned OFF for high output. Low is output when there is no initial diode MNOS.
3	CE (PLL)	O	CE output terminal to PLL IC. Used as a LATCH signal to send data to PLL IC. Goes low during ACC OFF and ALL OFF or in modes other than TUNER.
4	CLK O (PLL/LCD)	O	Clock output terminal to PLL IC and LCD driver IC. Goes low during ACC OFF and ALL OFF (display OFF).
5	DAT O (PLL/LCD)	O	Clock output terminal to PLL IC and LCD driver IC. Goes low during ACC OFF and ALL OFF (display OFF).
6	CE (VOL)	O	CE output terminal to VOL IC. Used as a LATCH signal to send data to VOL IC. Goes low during ACC OFF and ALL OFF.
7	RESET	I	Reset input terminal. Microcomputer can be reset and started by changing the level from low to high. A high signal is input during normal operation.
8	X2	–	System clock oscillation connection terminal. Connected at 4.19MHz.
9	X1	I	System clock oscillation connection terminal. Connected at 4.19MHz.
10	CE (LCD)	O	CE output terminal to LCD driver IC. Used as a LATCH signal to send data to LCD IC. Goes low during ACC OFF and ALL OFF (display OFF).
11	INH (LCD)	O	INH output terminal to LCD driver IC. When high is output, ON is displayed. When low is output, OFF is displayed. Goes low during ACC OFF and ALL OFF (display OFF).
12	CLK O (VOL)/ TEST	I/O	Clock output terminal to VOL IC. Goes low during ACC OFF and ALL OFF. During initialization, high is input using a TEST input connector, and initial data is written to the external RAM. Low is input during normal operation. Used as a clock output signal to VOL IC.
13	DAT O (VOL)	O	Data output terminal to VOL IC. Goes low during ACC OFF and ALL OFF.
14	KO7	O	KEY SCAN output terminal.
15	KO6	O	KEY SCAN output terminal.
16	KO5	O	KEY SCAN output terminal.
17	KO4	O	KEY SCAN output terminal.
18	KO3	O	KEY SCAN output terminal.
19	KO2	O	KEY SCAN output terminal.
20	KO1	O	KEY SCAN output terminal.
21	KO0	O	KEY SCAN output terminal.
22	K13	I	KEY SCAN input terminal.
23	K12	I	KEY SCAN input terminal.
24	K11	I	KEY SCAN input terminal.
25	K10	I	KEY SCAN input terminal.

Pin No.	Name	I/O	Description
26	Vss	I	GND
27	ACC CHECK	I	Accessory input terminal. High : ACC ON, Low : ACC OFF
28	(SK)	–	SK signal input terminal (unused and opened).
29	SD	I	SD signal input terminal. Tuning can be done at high level but not at low level.
30	(DK)	–	DK signal input terminal (unused and opened).
31	STEREO	I	STEREO signal input terminal. A STEREO signal is input for high level, and a MONO signal for low level.
32	CD CHECK	I	CD changer check input terminal. CD changer exists for high level, and does not exist for low level.
33	(METAL)	–	METAL input terminal (unused and opened).
34	TAPE ON	I	TAPE ON input terminal from TAPE control microcomputer. Goes high during tape operation and goes low when tape stops.
35	(ILL)	–	Illumination input terminal (unused and opened).
36	REMOTE IN	I	Remote in (AUX) input terminal. AUX mode is entered when low is input with ACC ON.
37	DAT O (TAPE/CD)	O	DATA output terminal to TAPE control microcomputer and CD changer (key data is output). Low is output except during data transfer.
38	CLK O (TAPE/CD)	O	Clock output terminal to TAPE control microcomputer and CD changer. Low is output except during data transfer.
39	DISPSEL	O	DISPSEL output terminal to TAPE control microcomputer and CD changer. A square wave (15.6 msec. period is output when the TUNER, TAPE, or CD mode is set during power ON. The TAPE control microcomputer detects the timing for sending the display data at the leading edge. The CD changer detects the timing at the trailing edge.
40	BEEP	O	BEEP output terminal. A square wave of approx. 2 kHz is output when a key acknowledge beep or alarm sounds.
41	DAT IN (TAPE/CD)	I	DATA input terminal from TAPE control microcomputer and CD changer.
42	NC	–	
43	CLK IN (TAPE/CD)	I	Clock input terminal from TAPE control microcomputer and CD changer.
44	(REMCON)	–	Remote input terminal (unused and opened).
45	AMP ON	O	Amplifier output terminal. High : AMP ON, Low : AMP OFF
46	METAL	O	METAL output terminal. When a METAL signal is output in TAPE mode, high is output. When no METAL signal is output, low is output. High is output during ACC OFF and ACC OFF or in modes other than TAPE.
47	MONO	O	MONO output terminal. When an FM MONO signal is output in TUNER mode, high is output. When signals other than FM MONO are output, low is output.

Pin No.	Name	I/O	Description
48	MUTE	O	AUDIO MUTE output terminal. Used as a mute circuit control signal. A MUTE ON signal is sent when this is high, and a MUTE OFF signal when this is low. Goes low after eight seconds during ACC OFF and ALL OFF. The AMP ON output also goes low.
49	DOLBY B/C	O	DOLBY B/C switching output terminal. Valid when the DOLBY ON/OFF signal is low. Set to DOLBY B when the signal is high, and set to DOLBY C when it is Low. High is output during AMS, ACC OFF, and ALL OFF in TAPE mode and in modes other than TAPE.
50	DOLBY ON/OFF	O	DOLBY switching output terminal. DOLBY is on for low and off for high. High is output during AMS, ACC OFF and ALL OFF in TAPE mode and in modes other than TAPE.
51	CD	O	CD mode select output terminal. Goes high in CD mode and goes low in modes other than CD. Goes low during ACC OFF.
52	POWER	O	POWER ON output terminal. Goes high in TUNER, TAPE, and CD modes and goes low during ACC OFF. Also used as a remote output port.
53	DIMER select ON/OFF	O	DIMER ON/OFF select output terminal. The DIMER signal can be selected for high and cannot be selected for low. Goes high during ACC OFF and ALL OFF.
54	(LW)	–	LW select output terminal. Low is output during tuner LW band or TV receiving (for Japanese FM). High is output in modes other than TUNER or during ACC OFF. (unused and opened.)
55	AM	O	AM select output terminal. Low is output for tuner AM (MW) band. Goes high in modes other than TUNER or during ACC OFF.
56	FM	O	FM select output terminal. Low is output for tuner FM band. Goes high in modes other than TUNER or during ACC OFF.
57	NC	–	
58	BACKUP 5V	I	Positive power supply terminal. A backup power of approx. 5V is supplied.
59	CD MUTE	I	MUTE input terminal from CD change.
60	TAPE MUTE	I	MUTE input terminal from TAPE control microcomputer.
61	BUSY (RAM)	I	BUSY input terminal from external RAM.
62	DATA IN (RAM)	I	DATA input terminal from external RAM.
63	CE (RAM)	O	CE output terminal to external RAM. Used as a LATCH signal to send data.
64	CLKO (RAM)	O	CLOCK output terminal to external RAM. When there is no RAM indicated by initial diode MNOS, a CE signal is also output for low.

b. Key Matrix

· Matrix Diagram

O \ I	KI0	KI1	KI2	KI3	
KO2	TUNER/BAND	ALL OFF	CD PLAY/PAUSE	TAPE PLAY/DIR	Momentary Key
KO3	EJECT	DOLBY/MONO	MANU – DISC – REW	MANU + DISC + FF	
KO4	③ B.SKIP	MEM. SCAN AUTO. MEM –	SEEK + AMS + FF AMS	SEEK – AMS – REW AMS	
KO5	MUTE	LOUD	LEVEL –	⑤ SHUFFLE1	
KO6	④ DISC. SCAN	② REPEAT	LEVEL +	SELECT	
KO7	METAL/LOCAL	① INTRO	⑥ SHUFFLE2	–	
KO0	DOLBY B/C	MNOS memory	REMIN VOL	PRESET ONLY	Initial diode (for initializing)
KO1	A0	A1	A2	A3	

· Initial Diode (for initializing)

	No diode	Diode
DOLBY B/C	DOLBY B, C	DOLBY B only
MNOS memory	No memory	Memory
REMIN VOL	AUX mode: SELECT, LOUD MUTE, LEVEL + LEVEL : Valid	AUX mode: SELECT, LOUD MUTE, LEVEL + LEVEL : Invalid
PRESET ONLY	① - ⑥ Ok in modes other than PRESET	①~⑥ Only in PRESET

	A1 A0 0 0	0 1	1 0	1 1
A3 A2 0 0	J + TV	J		
0 1	USA1	USA1	USA2	USA2
1 0	E1	E1	E2	E2
1 1	AEP L3	AEP L2	AEP L1	AEP

0 ... No diode
1 ... Diode

2. μPD7508HG

a. Description

Pin No.	Name	I/O	Description
1	KSI0	I	Key scanning input port.
2	KSI1	I	Key scanning input port.
3	KSI2	I	Key scanning input port.
4	KSI3	I	Key scanning input port.
5	(B. SKIP)	–	High output in BLANK SKIP mode (unused and opened).
6	(REPEAT)	–	High output in REPEAT mode (unused and opened).
7	(INTRO)	–	High output in INTRO scanning mode (unused and opened).
8	AMS	O	High output during AMS operation.
9	TEST	O	Test mode.
10	(REW)	O	High output in REW mode (unused and opened).
11	(NC)	–	
12	(NC)	–	
13	N/R	O	High output REVERSE mode.
14	MUTE	O	MUTE ON when a high signal is output.
15	RESET	I	Reset by high level and started from program address 0 by low level.
16	CLOCK1	–	System clock oscillator connection terminal.
17	V_{DD}	–	Positive power supply terminal.
18	CLOCK2	–	System clock oscillator connection terminal.
19	GND	–	External interrupt input (active) at leading edge (connected to GND).
20	ACC CHECK	I	ACC ON at high input. ACC OFF at low input.
21	CLK IN	I	Serial clock input from master microcomputer.
22	(SO)	–	(unused and opened).
23	(NC)	–	
24	DATA IN	I	Serial clock input from master microcomputer.
25	CLK OUT	O	Serial transfer clock output to master microcomputer.
26	DATA OUT	O	Serial transfer data output to master microcomputer.
27	(BEEP)	–	BEEP ON at High output (unused and opened).
28	TAPE ON	O	High output during tape operation.
29	DSPSEL	I	Serial transfer timing signal from master microcomputer. (A square wave (32 msec. period) is input and can be sent at the leading edge.)
30	REEL2	I	Input to detect the take-up reel table operation in normal REW mode.
31	REEL1	I	Input to detect the take-up reel table operation in normal FWD mode.
32	AMS IN	I	Sound detection input. (High : Sound)
33	CAP M	O	Capstan motor drive output. (Capstan motor is turned on when high is output.)

Pin No.	Name	I/O	Description
34	PL	O	Plunger drive output. (Plunger is turned on when high is output and released when low is output.)
35	LM –	O	Loading motor drive output. (Loading motor is turned on when high is output and released when low is output.)
36	LM +	O	

LM + \ LM –	High	Low
High	Braked	Forward
Low	Reverse	Stopped

Note: For forward rotation, the loading motor is activated in the PLAY direction.

37	Vss	–	Connected to GND.
38	(EVENT)	–	(Unused and connected to GND.)
39	(øOUT)	–	(Unused and Opened.)
40	(KSO0)	–	Key scanning output port (unused and Opened).
41	(KSO1)	–	Key scanning output port (unused and Opened).
42	KSO2	O	Key scanning output port.
43	KSO3	O	Key scanning output port.
44	(NC)	–	

b. Key Matrix

Output \ Input	KSI0	KSI1	KSI2	KSI3
KSO0	PLAY/DIR	STOP/EJECT	AMS FF/FF	AMS REW/REW
KSO1	B. SKIP	REPEAT	INTRO	–
KSO2	TAPE IN	REMOTE IN	N/R	EJECT/RELEASE
KSO3*	STOP	FF	REW	PLAY

* The input corresponding to KSO3 indicates the mode position shown in the table below.

STOP	FF	REW	PLAY	
I	O	O	O	STOP (EJECT) position
I	I	O	O	Intermediate position between STOP and FF
O	I	O	O	Normal FF position
O	I	I	O	Intermediate position between FF and REW
O	O	I	O	Normal REW position
O	O	I	I	Intermediate position between REW and PLAY
O	O	O	I	PLAY position

3. **μPD17104GS**

· Description

Pin No.	Name	I/O	Description
1	P0A3	O	Key scanning output port.
2	NC	–	Non connection.
3	P0C0	O	Key scanning output port.
4	P0C1	O	Key scanning output port.
5	P0C2	O	Key scanning output port.
6	P0C3	O	Key scanning output port.
7	NC	–	Non connection.
8	P0B0	O	Option output (μPD75108)
9	P0B1	O	Judge ignition ON/OFF
10	P0B2	I	Blinked the LED
11	P0B3	O	Changed switches 4066G
12	GND	–	Ground.
13	XIN	I	Clock input.
14	XOUT	O	Clock output.
15	$\overline{\text{RESET}}$	I	Reset by high level and started from program address 0 by low level.
16	P0D0	I	Key scanning input port.
17	P0D1	I	Key scanning input port.
18	NC	–	Non connection.
19	P0D2	I	Key scanning input port.
20	P0D3	I	Key scanning input port.
21	P0A0	O	Key scanning output port.
22	P0A1	O	Key scanning output port.
23	P0A2	O	Key scanning output port.
24	VDD	–	Positive power supply terminal.

μPD75108G

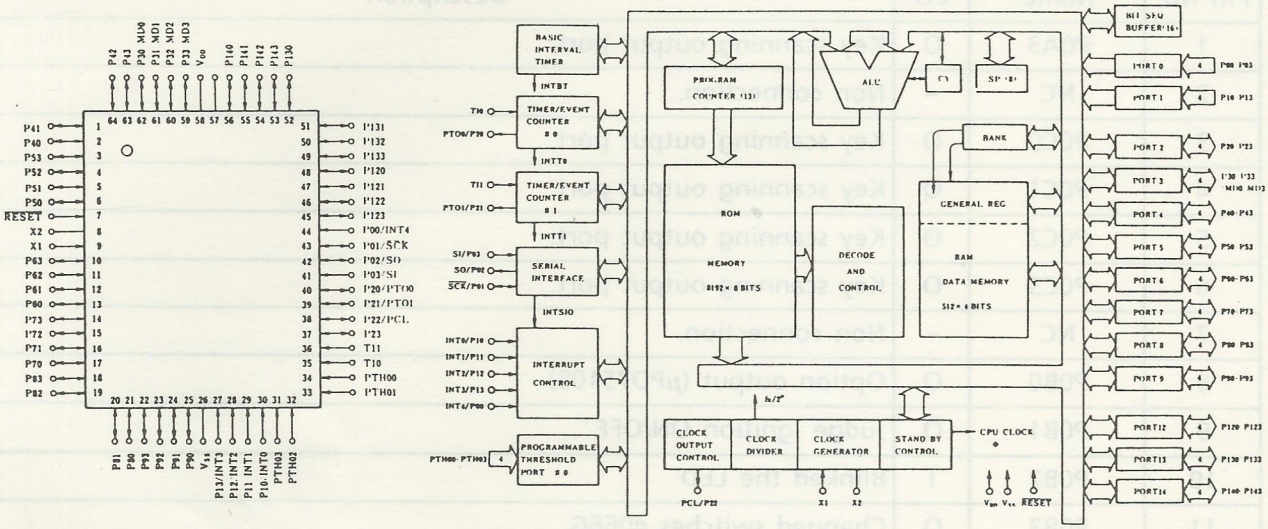

μPD7508HG

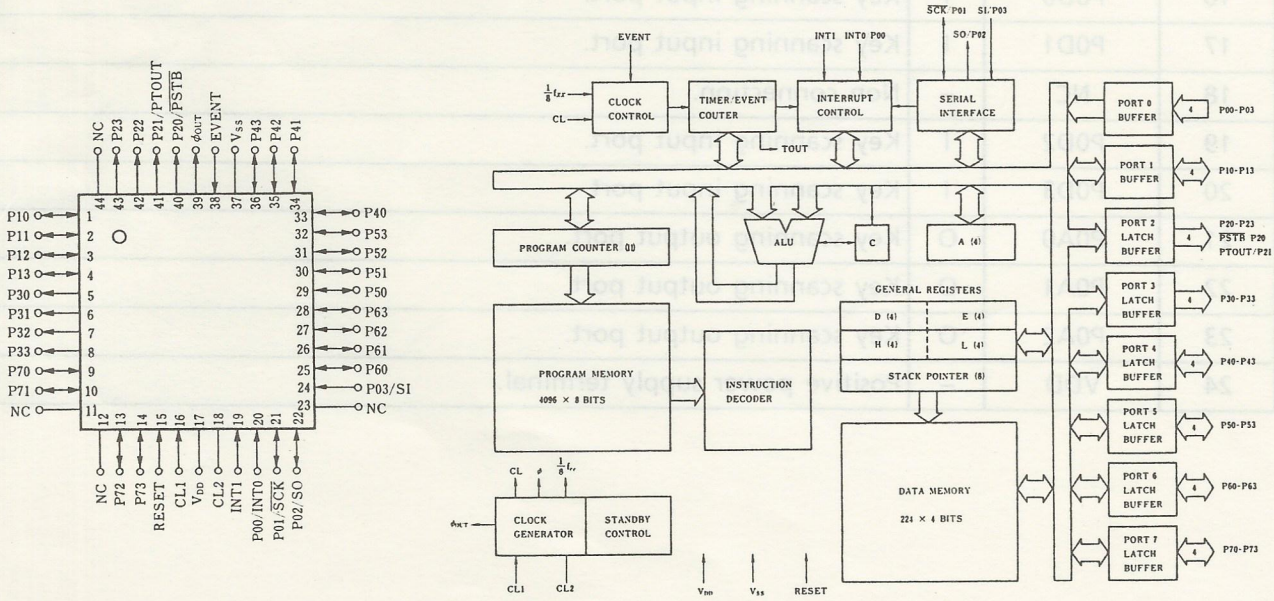

μPD17104GS

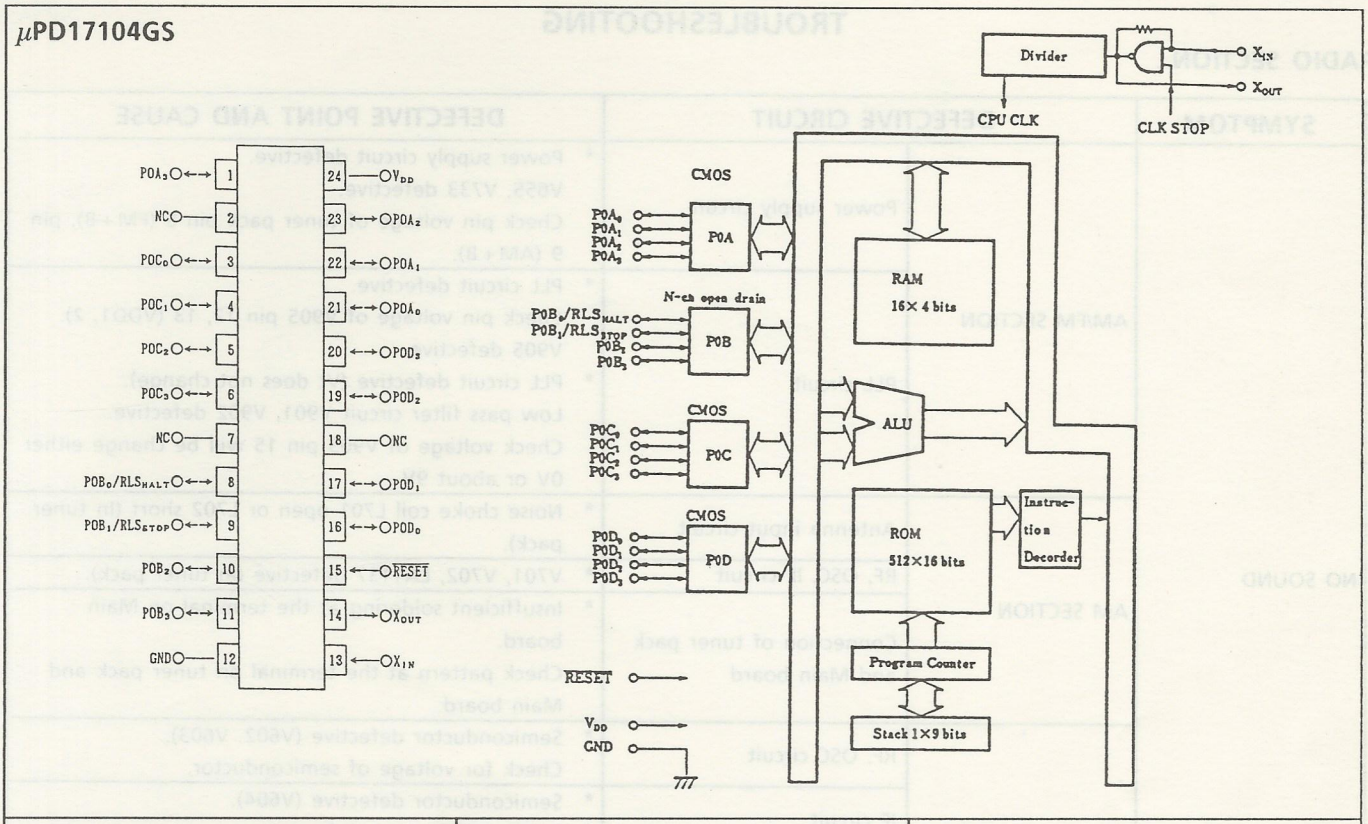
Divider
CPU CLK
CLK STOP
X_{IN}
X_{OUT}
CMOS
P0A
N-ch open drain
P0B
CMOS
P0C
CMOS
P0D
RAM
16×4 bits
ALU
ROM
512×16 bits
Instruction Decorder
Program Counter
Stack 1×9 bits
RESET
V_{DD}
GND
NC
V_{DD}
X_{IN}
X_{OUT}
RESET
POA_0
POA_1
POA_2
POA_3
POC_0
POC_1
POC_2
POC_3
POD_0
POD_1
POD_2
POD_3
POB_0/RLS_{HALT}
POB_1/RLS_{STOP}
POB_2
POB_3
GND

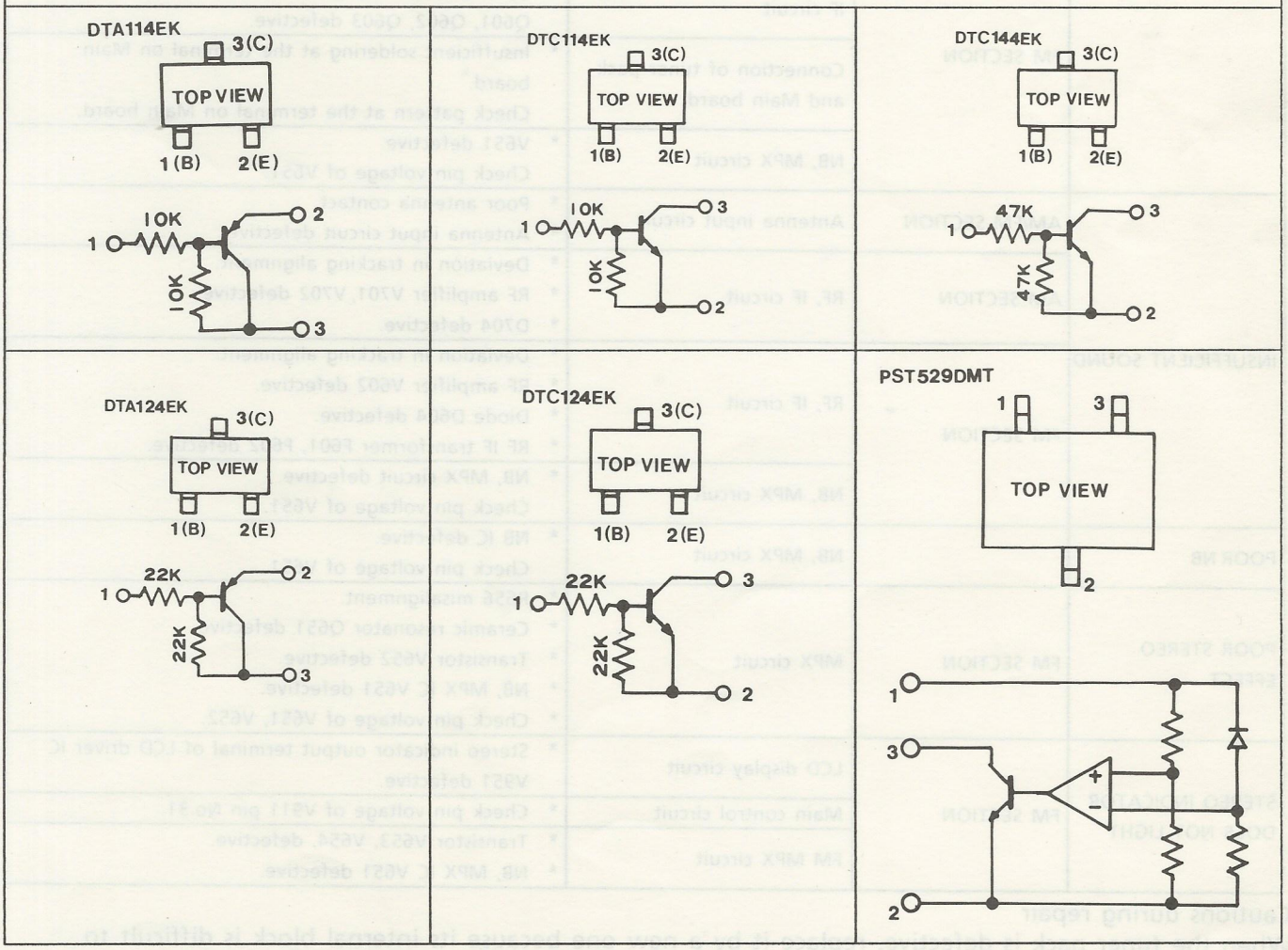
DTA114EK
3(C)
TOP VIEW
1(B)
2(E)
10K
10K
DTC114EK
3(C)
TOP VIEW
1(B)
2(E)
10K
10K
DTC144EK
3(C)
TOP VIEW
1(B)
2(E)
47K
47K
DTA124EK
3(C)
TOP VIEW
1(B)
2(E)
22K
22K
DTC124EK
3(C)
TOP VIEW
1(B)
2(E)
22K
22K
PST529DMT
1
3
TOP VIEW
2

TROUBLESHOOTING

RADIO SECTION

SYMPTOM	DEFECTIVE CIRCUIT		DEFECTIVE POINT AND CAUSE
NO SOUND	AM/FM SECTION	Power supply circuit	* Power supply circuit defective. V655, V733 defective. Check pin voltage of tuner pack pin 5 (FM + B), pin 9 (AM + B).
		PLL circuit	* PLL circuit defective. Check pin voltage of V905 pin 12, 13 (VDD1, 2). V905 defective. * PLL circuit defective (Vt does not change). Low pass filter circuit V901, V902 defective. Check voltage of V905 pin 15 will be change either 0V or about 9V.
	AM SECTION	Antenna input circuit	* Noise choke coil L701 open or L702 short (In tuner pack).
		RF, OSC, IF circuit	* V701, V702, LA1137 defective (In tuner pack).
		Connection of tuner pack and Main board	* Insufficient soldering at the terminal on Main board. Check pattern at the terminal on tuner pack and Main board.
	FM SECTION	RF, OSC circuit	* Semiconductor defective (V602, V603). Check for voltage of semiconductor.
		IF circuit	* Semiconductor defective (V604). Q601, Q602, Q603 defective.
		Connection of tuner pack and Main board	* Insufficient soldering at the terminal on Main board. Check pattern at the terminal on Main board.
		NB, MPX circuit	* V651 defective. Check pin voltage of V651.
INSUFFICIENT SOUND	AM/FM SECTION	Antenna input circuit	* Poor antenna contact. * Antenna input circuit defective.
	AM SECTION	RF, IF circuit	* Deviation in tracking alignment. * RF amplifier V701, V702 defective. * D704 defective.
	FM SECTION	RF, IF circuit	* Deviation in tracking alignment. * RF amplifier V602 defective. * Diode D604 defective. * RF IF transformer F601, F602 defective.
		NB, MPX circuit	* NB, MPX circuit defective. Check pin voltage of V651.
POOR NB		NB, MPX circuit	* NB IC defective. Check pin voltage of V651.
POOR STEREO EFFECT	FM SECTION	MPX circuit	* R656 misalignment. * Ceramic resonator Q651 defective. * Transistor V652 defective. * NB, MPX IC V651 defective. * Check pin voltage of V651, V652.
STEREO INDICATOR DOES NOT LIGHT	FM SECTION	LCD display circuit	* Stereo indicator output terminal of LCD driver IC V951 defective.
		Main control circuit	* Check pin voltage of V911 pin No.31.
		FM MPX circuit	* Transistor V653, V654, defective. * NB, MPX IC V651 defective.

Cautions during repair

When the tuner pack is defective, replace it by a new one because its internal block is difficult to repair.

TROUBLESHOOTING

AUDIO SECTION

SYMPTOM	DEFECTIVE CIRCUIT		DEFECTIVE POINT AND CAUSE
NO SOUND	TAPE SECTION	Mechanism or motor	* Motor does not run. Motor defective. Motor drive transistor V10 defective. Transistor V11 defective. Mechanism control IC V5 defective. Inductor L1 open. Check pin voltage of V5 pin No.33.
			* Solenoid does not operate. Solenoid open or solenoid drive transistor V7 defective,. Mechanism control IC V5 defective. * Check pin voltage of V5 pin No.34.
		Tape amplifier circuit	* Tape amplifier defective. Check pin voltage V101. * Head flexible printed circuit board open.
		Mute circuit	* Main control IC V911 defective. Check pin voltage V911 pin No.60. Mute ON - High level Mute OFF - Low level
	CD SECTION	CD pre amplifier circuit	* CD pre amplifier IC V102 defective.
		CD/TAPE, RADIO switch circuit	* Analog switch IC V103 defective. * Main control IC V911 defective. Check pin voltage V911 pin No.51. CD mode - High level Tape, Radio mode - Low level
	TAPE SECTION	Dolby mode switch circuit	* Mode switch transistor V917, V918 defective. * Main control IC V911 defective. Check pin voltage V911 pin No.34. Tape mode - High level Other - Low level
		Dolby circuit	* Dolby IC V501 defective. Check pin voltage V501.
		Electronic volume circuit	* Buffer OP amp. V105, V106, V108 defective. Check pin voltage V105, V106, V108. * Electronic volume IC V107 defective. Check pin voltage V107. * The circuit between main control IC and electronic volume IC open. (DATAV, CLKV, CEV) * Muting transistor V109, V209, V309, V409, V924, V925 defective. * Main control IC V911 defective. Check pin voltage V911 pin No.48. Mute ON - High level Mute OFF - Low level
DISTORTED SOUND OR INSUFFICIENT SOUND		Tape amplifier circuit	* Tape amplifier circuit defective. Check pin voltage of V101.
		Head	* Head surface dirty. * Head azimuth angle misalignment.
OSCILLATION		Tape amplifier circuit	* C101, C102, C201, C202 capacity insufficient or open.
ABNORMAL TAPE SPEED		Mechanism or motor	* Mechanism defective. * Motor defective.

TROUBLESHOOTING

SYMPTOM	DEFECTIVE CIRCUIT		DEFECTIVE POINT AND CAUSE
DOES NOT REVERSE (EITHER AUTO OR MANUAL)		Auto reverse circuit	* Does not reverse when program selector was depress or end of tape comes. * Auto reverse IC V101 defective. Check pin voltage V101. Mechanism control IC V5 defective. Check pin voltage V5 pin No.13. Forward - High level Reverse - Low level
ALWAYS REVERSE		Auto reverse circuit	* Always reverse when tape running. Tape end sensor defective. Check pin voltage V14, V15. LED of tape end sensor defective.
DOES NOT APS		APS circuit	* APS amplifier V13 defective. Check pin voltage V13. * APS-ON/OFF transistor V12 defective. * Mechanism control IC V5 defective,. Check pin voltage V5 pin No.8, 32. Pin 8 APS-ON - High level APS-OFF - Low level Pin 32 Sound - High level No sound - Low level
POOR DOLBY NR EFFECT		Dolby circuit	* Dolby ON/OFF circuit defective. Check pin voltage of V919, V920, V921. * Dolby IC V501 defective. Check pin voltage of V501.

RADIO AND AUDIO SECTION

SYMPTOM	DEFECTIVE CIRCUIT		DEFECTIVE POINT AND CAUSE
NO SOUND	AUDIO SIGNAL CIRCUIT	Power supply circuit	* Fuse open. * D71, D72 short. * Power ON circuit V59, V60 defective,. * Regulator circuit V54, V70, V916, D70 defective.
		Dolby circuit	* Dolby IC V501 defective. Check pin voltage of V501.
		Mute circuit	* Muting transistor V109, V209, V309, V409 defective. * Transistor V924, V925 defective. * Main control IC V911 defective. Check pin voltage of V911 pin No.48. Mute ON - High level Mute OFF - Low level
		Power amplifier circuit	* Power amplifier circuit defective. Check pin voltage of V151, V351.
	CD SECTION	CD auto changer interface cable	* Surge protector zener diode D919 - D923 defective. * One of the interface signal open. * Main control IC V911 defective.
		CD auto changer	* Disc is durty or defective.
OSCILLATION		Power supply circuit	* Voltage regulator transistor and zener diode V70, D70 defective. * C70, C257, C457 capacity insufficient or open.
ENGINE NOISE IS EXTREME			* Voltage regulator transistor and zener diode V70, D70 defective. * C71, C72, C73 defective.

TROUBLESHOOTING

CONTROL SECTION

SYMPTOM	DEFECTIVE CIRCUIT		DEFECTIVE POINT AND CAUSE
POWER SW DOES NOT ACCEPT		Interface circuit	* Does not accept when you input real interface code. Interface control IC V926 defective.
		Key matrix circuit	* Key matrix circuit defective. * Check pin wave of key source and key return.
		Main control Interface control circuit	* Ceramic resonator Q902, Q903 defective. * Main control IC V911 defective. Check pin voltage pin No.27, No.52. Pin 27 High level Acc ON Low level Acc OFF Pin 52 High level Power ON Low level Power OFF
INTERFACE CODE DOES NOT CANCEL (DISPLAY IS NORMALCY)		Interface control circuit	* Acc check transistor V922, V923 defective. * Interface code matrix defective.
CAN NOT OPERATE CD AUTO CHANGER		Key matrix circuit	* Key matrix circuit defective. * Check pin wave of key source and key return. * Analog switch IC V927, V928, V929, V930 defective.
		Interface cable circuit	* One of the interface cable open. * Protect zener defective.
		Main control circuit	* Main control IC V911 defective. Check pin voltage of V911.
LCD DOES NOT DISPLAY		LCD driver circuit	* LCD driver IC V951 defective. * LCD driver VDD switching transistor V907, V909 defective.
		Main control circuit	* Control signal between Main control IC and LCD driver IC open. (DA, CL, CEL)
DIMMER DOES NOT FUNCTION		Dimmer circuit	* Switching transistor V55 defective. * Zener diode defective.
THE UNIT SEARCH SCANS BUT DOES NOT STOP	AM/FM SECTION	Stop circuit	* Control signal between Main control IC and PLL control IC open. * PLL control IC V905 defective. * Main control IC V911 defective.
	AM SECTION	Stop circuit	* R704 misalignment. * Ceramic filter Q702 defective. * AM IC V703 defective.
	FM SECTION	Stop circuit	* R615 misalignment. * V603, V604 defective. * Check pin voltage of V603, V604.

AM/FM CIRCUIT BOARD COMPONENT LOCATION GUIDE

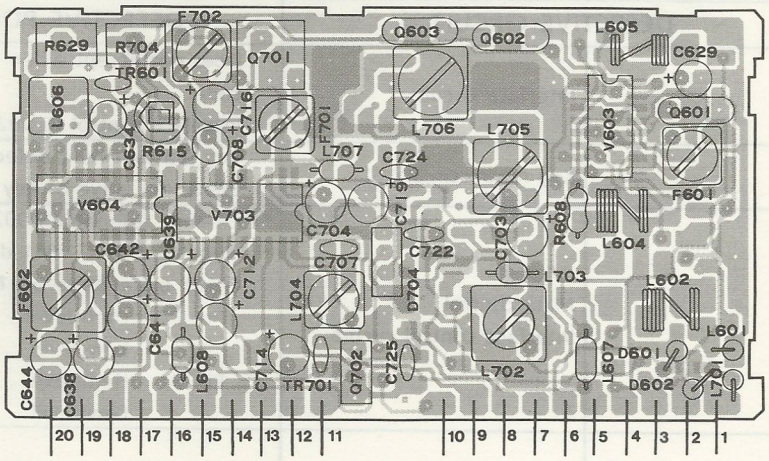

TOP VIEW

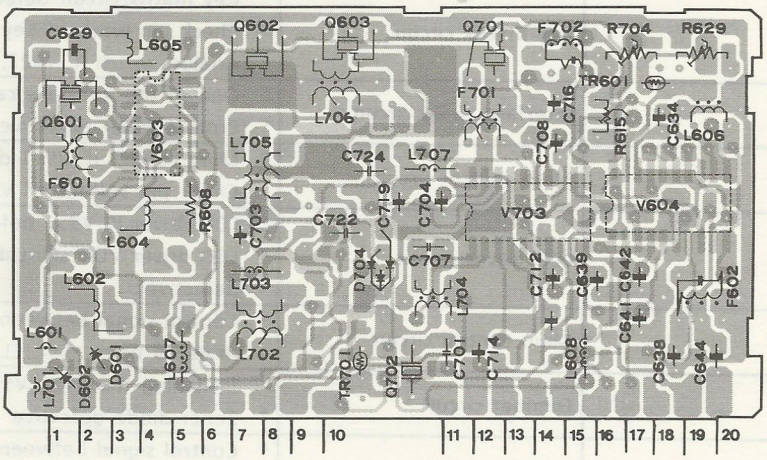

BOTTOM VIEW

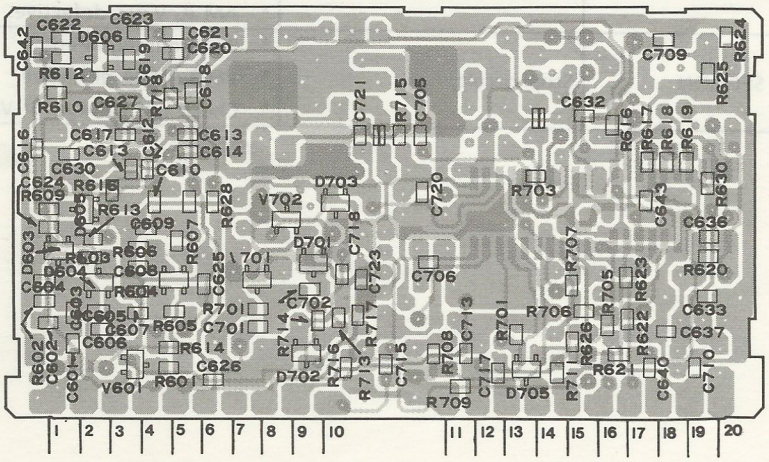

CHIP VIEW

REF. NO. 33 AR-0221 AM/FM CIRCUIT BOARD ASSEMBLY PARTS LIST

REF. NO.	DESCRIPTION			PART NO.	MFR'S NO.
C601	Chip capacitor	56pF	25V		263-560Z-1EJF-301
C602	Chip capacitor	0.0022μF	25V		263-222Z-1EJF-301
C603, 607, 620	Chip capacitor	15pF	25V		263-150Z-1EJF-301
C604	Chip capacitor	22pF	25V		263-220Z-1EJF-301
C605	Chip capacitor	0-5pF	25V		263-3R0Z-1EJF-301
C606	Chip capacitor	3-6pF	25V		263-4R0Z-1EJF-301
C608, 617, 632, 643, 701 705, 715, 721	Chip capacitor	0.01μF	25V		263-103Z-1EJF-301
C609, 619	Chip capacitor	0-7pF	25V		263-5R0Z-1EJF-301
C610	Chip capacitor	2-7pF	25V		263-5R0Z-1EJF-301
C611	Chip capacitor	0-5pF	25V		263-2R0Z-1EJF-301
C612, 613	Chip capacitor	5pF	25V		263-5R0Z-1EJF-301
C613, 633, 640, 717	Chip capacitor	100pF	25V		263-101Z-1EJF-301
C614, 618, 624, 625, 626, 627, 630, 637, 709, 713, 718, 720	Chip capacitor	0.022μF	25V		263-223Z-1EJF-301
C616	Chip capacitor	0-100pF	25V		263-100Z-1EJF-301
C621	Chip capacitor	33pF	25V		263-330Z-1EJF-301
C622	Chip capacitor	39pF	25V		263-390Z-1EJF-301
C623	Chip capacitor	12pF	25V		263-120Z-1EJF-301
C628, 636	Chip capacitor	30pF	25V		263-300Z-1EJF-301
C629, 712	Electrolytic capacitor	4.7μF	25V		250-4R7M-1E00-012
C634, 641	Electrolytic capacitor	1μF	50V		250-1R0M-1H00-012
C638, 644	Electrolytic capacitor	10μF	16V		250-100M-1C00-012
C639, 703, 716	Electrolytic capacitor	33μF	10V		250-330M-1A00-012
C642	Chip capacitor	0.0047μF	25V		263-472Z-1EJF-301
C645, 708, 714	Electrolytic capacitor	0.47μF	50V		250-R47M-1H00-000
C702	Chip capacitor	1500-4700pF	25V		263-182Z-1EJF-301
C704	Electrolytic capacitor	2.2μF	50V		250-2R2M-1H00-012
C706	Chip capacitor	360-430pF	25V		263-431Z-1EJF-301
C707	Ceramic capacitor	0-20pF	50V		261-100K-1HJB-105
C710, 723	Chip capacitor	0.033μF	25V		263-333Z-1EJF-301
C719	Electrolytic capacitor	22μF	10V		250-220M-1A00-012
C725	Ceramic capacitor	5-15pF	50V		261-8R0K-1HJB-105
D601, 602	Diode 1SS133			ETD-1SS133	304-0033-0000
D603, 701	Diode 1SV172			ETD-1SV172	304-0101-0000
D604, 605, 606	Varactor diode 1SV225			ETD-1SV225	304-0102-0000
D702, 703	Diode HSM221			ETD-HSM221	304-0103-0000
D704	Varactor diode SVC351			ETD-SVC351	304-0105-0000
D705	Diode HSM2838			ETD-HSM2838	304-0104-0000
F601	FM IFT			ELD-0395	351-0395-1300
F602	Detector coil			ELD-0387	351-0387-1300
F701, 702	AM IFT			ELD-0396	351-0396-1300
L601	Inductor 0.22μH			ELD-0384	351-0384-1200
L602	ANT coil			ELA-0135	352-0135-1300
L603	RF coil			ELD-0385	351-0385-1200
L604	RF coil			ELA-0136	352-0136-1300
L605	OSC coil			ELA-0137	352-0137-1300
L606	Inductor			ELD-0386	351-0386-1300
L607, 608	Inductor 10μH			ELD-0388	351-0388-1200
L701	Inductor 4.7μH			ELD-0389	351-0389-1200
L702	ANT coil			ELD-0392	351-0392-1300
L703	Inductor 0-6.8μH			ELD-0390	351-0390-1200
L704	AM OSC coil			ELD-0393	351-0393-1300

REF. NO.	DESCRIPTION				PART NO.	MFR'S NO.
L705, 706	AM RF coil				ELD-0394	351-0394-1300
L707	Inductor 56μH				ELD-0391	351-0391-1200
Q601	Ceramic filter				EOP-0071	360-0071-0400
Q602, 603	Ceramic filter				EOP-0072	360-0072-0400
Q701	Ceramic filter				EOP-0073	360-0073-0400
Q702	Ceramic filter				EOP-0074	360-0074-0400
R601	Chip resistor	68k-150k ohm	1/10W	±5%		202-823J-2A00-150
R602	Chip resistor	27k ohm	1/10W	±5%		202-273J-2A00-150
R603, 604, 605, 609, 614	Chip resistor	100k ohm	1/10W	±5%		202-104J-2A00-150
R606	Chip resistor	270 ohm	1/10W	±5%		202-274J-2A00-150
R607	Chip resistor	0-120 ohm	1/10W	±5%		202-820J-2A00-150
R608	Carbon film resistor	560-∞ ohm				200-102J-2C00-010
R610	Chip resistor	100-1k ohm	1/10W	±5%		202-102J-2A00-150
R611	Chip resistor	0-470 ohm	1/10W	±5%		202-121J-2A00-150
R612, 621, 626, 706, 707, 710, 711, 714	Chip resistor	10k ohm	1/10W	±5%		202-103J-2A00-150
R613	Chip resistor	100 ohm	1/10W	±5%		202-101J-2A00-150
R615	Trimmer resistor	1k ohm			ECRV-1040	340-1040-0400
R616	Chip resistor	0-47 ohm	1/10W	±5%		202-0R0J-2A00-150
R617	Chip resistor	33k-180k ohm	1/10W	±5%		202-563J-2A00-150
R618	Chip resistor	68k-180k ohm	1/10W	±5%		202-104J-2A00-150
R619	Chip resistor	4.7k-27k ohm	1/10W	±5%		202-103J-2A00-150
R620	Chip resistor	4.7k-10k ohm	1/10W	±5%		202-682J-2A00-150
R622	Chip resistor	47k ohm	1/10W	±5%		202-473J-2A00-150
R623	Chip resistor	4.7k-10k ohm	1/10W	±5%		202-822J-2A00-150
R624	Chip resistor	3.3k-10k ohm	1/10W	±5%		202-562J-2A00-150
R625	Chip resistor	3.9k ohm	1/10W	±5%		202-392J-2A00-150
R629, 704	Trimmer resistor	10k ohm			ECRV-1041	340-1041-0400
R630	Chip resistor	15k-22k ohm	1/10W	±5%		202-183J-2A00-150
R703	Chip resistor	390k ohm	1/10W	±5%		202-394J-2A00-150
R705	Chip resistor	3.3k ohm	1/10W	±5%		202-332J-2A00-150
R708	Chip resistor	180 ohm	1/10W	±5%		202-184J-2A00-150
R709	Chip resistor	4.7k ohm	1/10W	±5%		202-472J-2A00-150
R713	Chip resistor	22k ohm	1/10W	±5%		202-223J-2A00-150
R715	Chip resistor	22 ohm	1/10W	±5%		202-220J-2A00-150
R716	Chip resistor	220k ohm	1/10W	±5%		202-221J-2A00-150
R717	Chip resistor	2.2k ohm	1/10W	±5%		202-222J-2A00-150
R718	Chip resistor	1M ohm	1/10W	±5%		202-105J-2A00-150
TR601, 701	Thermister				ETS-0062	326-0062-1000
V601	Transistor DTC144EK				ETTC-DTC144EK	302-0149-0001
V602	FET 3SK195				ETTF-3SK195	300-0051-0000
V603	FM front end IC LA1175				ETI-LA1175	310-0292-0000
V604	FM IF IC LA1145				ETI-LA1145	310-0415-0000
V701	FET 2SK1070				ETTF-2SK1070	300-0057-1300
V702	Transistor 2SC2712(GR)				ETTC-2SC2712	302-0108-1200
V703	AM IC LA1137				ETI-LA1137	310-0416-0000

MAIN CIRCUIT BOARD COMPONENT LOCATION GUIDE

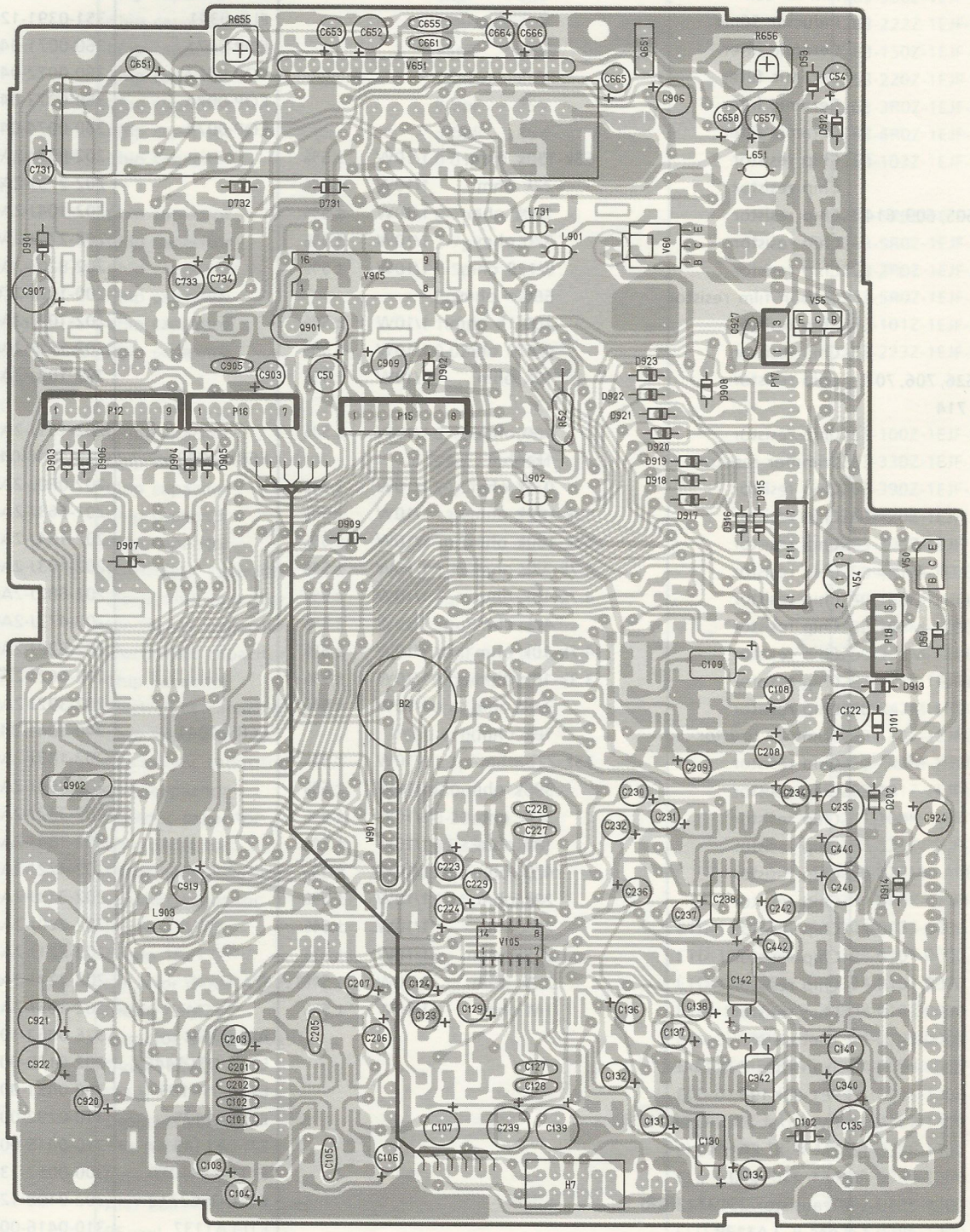

TOP VIEW

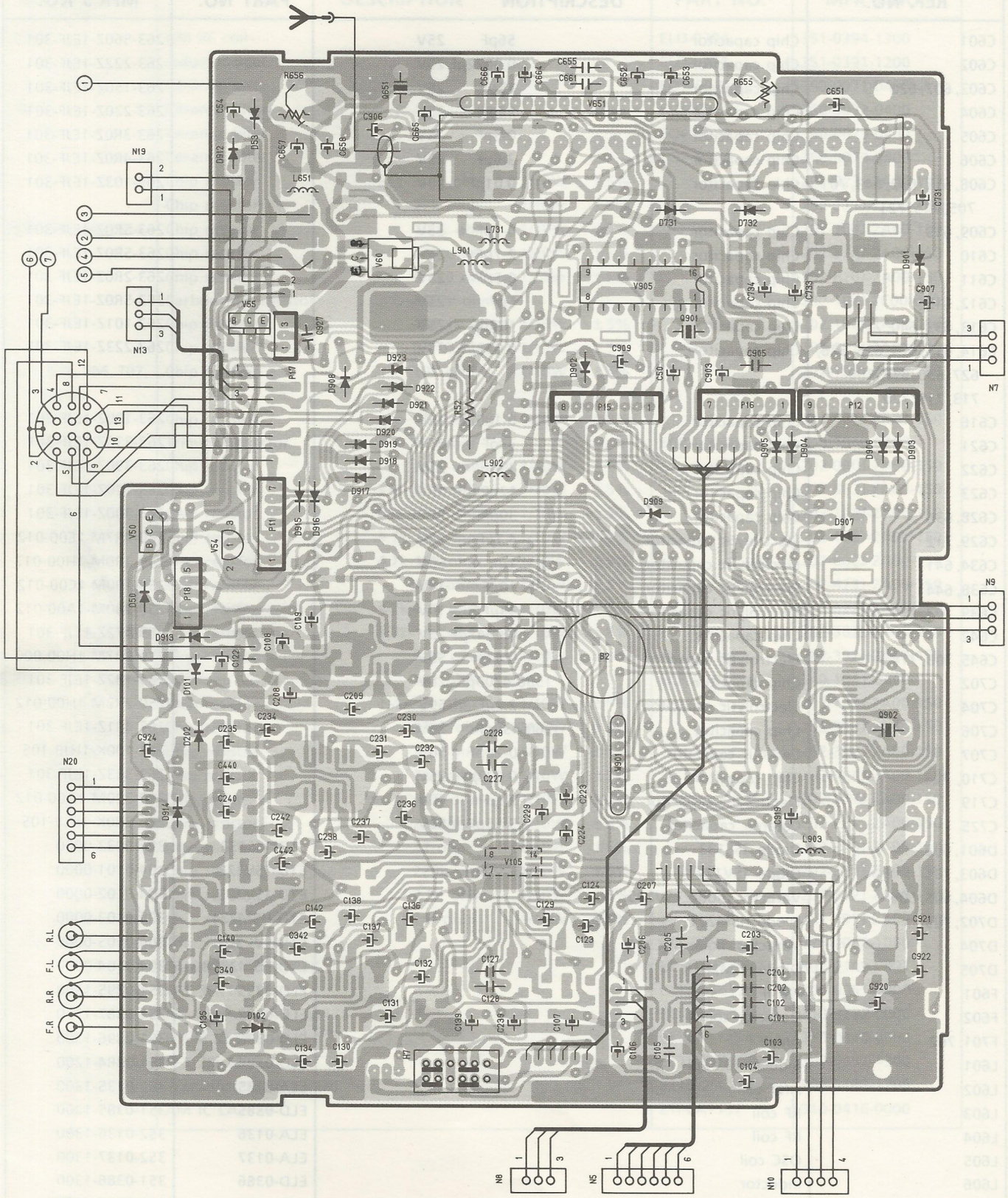
N19
N13
N7
N9
N20
N8
N5
N10
R.L
F.L
R.R
F.R
R656
R655
C655
C661
C651
V651
C906
L651
D731
D732
L731
L901
V66
V905
C784
C733
D901
C907
Q901
V55
Q927
R47
D923
D922
D921
D920
D919
D918
D917
D908
R52
D902
C909
C50
C903
C905
P15
P16
P12
D905
D904
D906
D903
L902
D909
D907
D915
D916
P11
V50
V54
P18
D50
D913
C109
C108
C122
D101
C208
C209
C234
C230
C231
C232
C228
C227
C295
D202
C924
C440
C240
D914
C242
C237
C236
C238
C442
C229
C223
C224
Q902
Q901
C919
L903
V105
C124
C207
C142
C138
C136
C137
C129
C123
C206
C205
C203
C201
C202
C102
C101
C921
C922
C920
C140
C342
C340
C132
C127
C128
C131
C136
D102
C134
C130
C99
C236
C107
C106
C105
C103
C104
R7
B2

BOTTOM VIEW

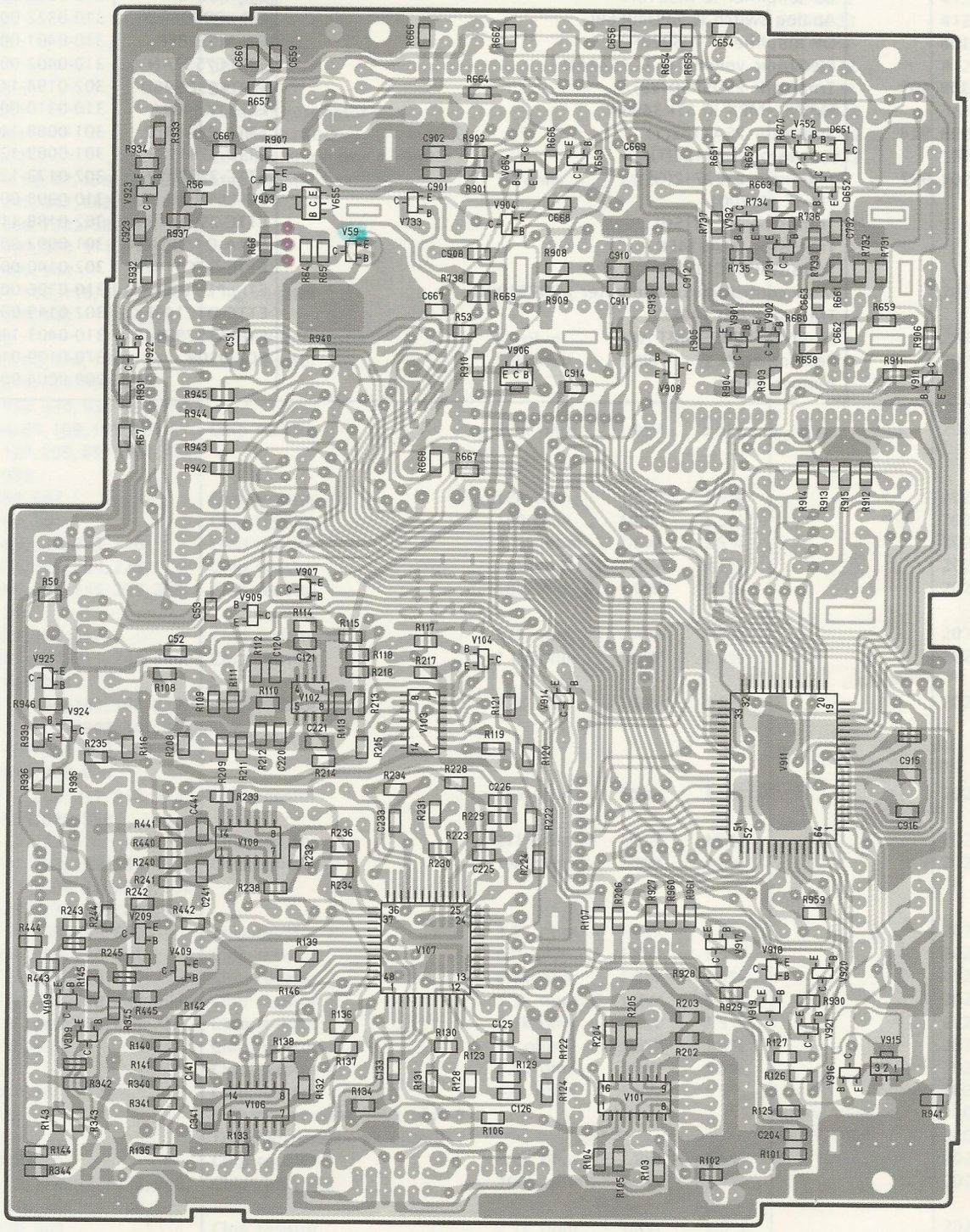

CHIP VIEW

REF. NO.32 CTP-1681-2 MAIN CIRCUIT BOARD ASSEMBLY PARTS LIST

REF. NO.	DESCRIPTION				PART NO.	MFR'S NO.
	Main printed circuit board					440-1727-0102
B2	Buzzer				EAS-0060	461-0060-0000
C50	Electrolytic capacitor	22μF	16V			250-220M-1C00-122
C51, 52, 53, 204, 656, 667, 668, 670, 732, 910, 911	Chip capacitor	0.022μF	25V			263-223M-1EJB-310
C54, 136, 236	Electrolytic capacitor	0.47μF	50V			250-R47M-1H00-111
C101, 102, 201, 202	Ceramic capacitor	680pF	50V			261-681K-1HCH-106
C103, 203	Electrolytic capacitor	47μF	6.3V			250-470M-0J00-120
C104, 129, 131, 132, 134, 137, 138, 229, 230, 231, 232, 234, 237	Electrolytic capacitor	10μF	16V			250-100M-1C00-111
C105, 205, 661, 905	Monolithic capacitor	0.01μF	25V	±10%		262-103K-1EJR-106
C106, 108, 123, 124, 206, 208, 209, 223, 224, 242, 442, 651, 658	Electrolytic capacitor	4.7μF	25V			250-4R7M-1E00-111
C107, 140, 240, 340, 440, 652, 657, 909	Electrolytic capacitor	47μF	10V			250-470M-1A00-122
C109, 142, 342	Electrolytic capacitor	4.7μF	25V			250-4R7M-1E00-012
C120, 121, 220, 221	Chip capacitor	180pF	50V			265-181J-1H00-310
C122, 135, 235, 922	Electrolytic capacitor	100μF	10V			250-101M-1A00-025
C125, 141, 225, 241, 341, 441, 908	Chip capacitor	100pF	50V			265-101J-1H00-310
C126, 133, 226, 233	Chip capacitor	0.0027μF	50V			263-272M-1HJB-310
C127, 128, 227, 228	Monolithic capacitor	0.047μF	25V	±10%		262-473K-1EJR-120
C130, 238	Electrolytic capacitor	10μF	16V			250-100M-1C00-012
C139, 207, 664, 665	Electrolytic capacitor	1μF	50V			250-1R0M-1H00-111
C239, 907, 921	Electrolytic capacitor	100μF	10V			250-101M-1A00-133
C653, 733, 906	Electrolytic capacitor	22μF	10V			250-220M-1A00-122
C654	Chip capacitor	0.0033μF	25V			263-332M-1EJB-310
C655	Monolithic capacitor	0.022μF	25V	±10%		262-223K-1EJR-111
C659	Chip capacitor	470pF	25V			263-471M-1EJB-310
C660, 901, 902, 923	Chip capacitor	0.01μF	50V			263-103M-1HJB-310
C662, 663	Chip capacitor	0.0047μF	50V			263-472M-1HJB-310
C666, 734	Electrolytic capacitor	2.2μF	50V			250-2R2M-1H00-111
C669	Chip capacitor	0.0022μF	50V			263-222M-1HJB-310
C731	Electrolytic capacitor	0.1μF	50V			250-R10M-1H00-111
C903	Electrolytic capacitor	2.2μF	50V			252-2R2M-1H00-114
C912, 913, 915, 916	Chip capacitor	33μF	50V			265-330J-1HCH-310
C914	Chip capacitor	0.001μF	50V			263-102M-1HJB-310
C919	Electrolytic capacitor	22μF	6.3V			250-220M-0J00-111
C920	Electrolytic capacitor	1μF	50V			250-1R0M-1H00-012
C924	Electrolytic capacitor	47μF	16V			250-470M-1C00-122
C970	Ceramic capacitor	470pF	50V			261-471K-1HJB-005
D50	Zener diode HZS10N(B1)				ETD-HZS10N	306-0101-1001
D53, 901	Zener diode HZS9.1N(B2)				ETD-HZS9.1N	306-0100-1101
D55, 731, 732, 903, 904, 905, 906, 907, 910, 911, 913, 915, 916	Diode MA165				ETD-MA165	304-0037-0001
D101	Zener diode HZS7.5N(B2)				ETD-HZS7.5N	306-0098-1101
D102, 202	Zener diode HZS4.3N(B2)				ETD-HZS4.3N	306-0092-1101
D651, 652	Diode DAP202K				ETD-DAP202K	304-0065-0001
D902, 912	Zener diode HZS5.6N(B2)				ETD-HZS5.6N	306-0095-1101
D914	Zener diode HZS4.7N(B1)				ETD-HZS4.7N	306-0093-1001
D917, 918, 919, 920, 921, 922, 923	Zener diode HZS6.8N(B3)				ETD-HZS6.8N	306-0097-1201
G701	Surge protector				EIN-0005	431-0005-0000
H7	Slide switch				ESS-0582	400-0582-0100
L651, 903	Inductor 22μH				ELD-0377	351-0377-1201
L731	Inductor 100μH				ELD-0378	351-0378-1201
L901	Inductor 1μH				ELD-0367	351-0367-1201
L902	Inductor 220μH				ELD-0379	351-0379-1201

REF. NO.	DESCRIPTION				PART NO.	MFR'S NO.
P11, 16	7P plug				ESC-0222	412-0222-0000
P12	9P plug				ESC-0223	412-0223-0000
P15	8P plug				ESC-0276	412-0276-0000
P17	3P plug				ESC-0272	412-0272-0000
P18	5P plug				ESC-0274	412-0274-0000
Q651	Ceramic resonator				EOC-0024	361-0024-0400
Q901	Crystal 7.2MHz				EOC-0032	361-0032-1900
Q902	Ceramic resonator 4.19MHz				EOC-0033	361-0033-0400
R50, 56, 67, 135, 142, 235, 242, 342, 442, 665, 666, 669, 733, 738, 904, 905, 907, 910, 911, 937, 944, 937, 944	Chip resistor	1k ohm	1/8W	±5%		202-102J-2B00-140
R51, 106, 110, 116, 942, 943, 945	Chip resistor	100 ohm	1/8W	±5%		202-101J-2B00-140
R52	Metal film resistor	27 ohm	1W	±5%		202-270J-3A00-010
R53, 66, 114, 124, 139, 214, 224, 928, 929, 933, 934, 936, 939, 946	Chip resistor	10k ohm	1/8W	±5%		202-103J-2B00-140
R64, 65, 109, 125, 126, 127, 209, 651, 664, 735, 935	Chip resistor	2.2k ohm	1/8W	±5%		202-222J-2B00-140
R101, 667	Chip resistor	12k ohm	1/8W	±5%		202-123J-2B00-140
R102, 202	Chip resistor	180 ohm	1/8W	±5%		202-181J-2B00-140
R103, 118, 203, 218	Chip resistor	330k ohm	1/8W	±5%		202-334J-2B00-140
R104, 128, 204, 228	Chip resistor	15k ohm	1/8W	±5%		202-153J-2B00-140
R105, 108, 115, 205, 208, 215	Chip resistor	18k ohm	1/8W	±5%		202-183J-2B00-140
R107, 120, 657	Chip resistor	33k ohm	1//8W	±5%		202-333J-2B00-140
R111, 144, 211, 244, 344, 444, 901	Chip resistor	1.8k ohm	1/8W	±5%		202-182J-2B00-140
R112, 113, 141, 143, 212, 213, 241, 243, 341, 343, 441, 443, 652, 668, 737, 902, 908, 909	Chip resistor	22k ohm	1/8W	±5%		202-223J-2B00-140
R117, 206, 217, 912, 913, 914, 915, 958	Chip resistor	56k ohm	1/8W	±5%		202-563J-2B00-140
R119, 121	Chip resistor	27k ohm	1/8W	±5%		202-273J-2B00-140
R122, 123, 132, 133, 134, 137, 138, 222, 223, 232, 233, 234, 237, 238, 941	Chip resistor	1M ohm	1/8W	±5%		202-105J-2B00-140
R129, 229, 658, 660	Chip resistor	3.3k ohm	1/8W	±5%		202-332J-2B00-140
R130, 131, 230, 231	Chip resistor	82k ohm	1/8W	±5%		202-823J-2B00-140
R136, 236, 930	Chip resistor	6.8k ohm	1/8W	±5%		202-682J-2B00-140
R140, 240, 340, 440, 663	Chip resistor	1.5k ohm	1/8W	±5%		202-152J-2B00-140
R145, 245, 345, 445, 734	Chip resistor	4.7k ohm	1/8W	±5%		202-472J-2B00-140
R146, 927	Chip resistor	10 ohm	1/8W	±5%		202-100J-2B00-140
R653	Chip resistor	5.6k ohm	1/8W	±5%		202-562J-2B00-140
R654, 731, 732	Chip resistor	47k ohm	1/8W	±5%		202-473J-2B00-140
R655	Trimmer resistor 100k ohm-B				ECRV-1008	340-1008-0200
R656	Trimmer resistor 5k ohm-B				ECRV-1004	340-1004-0200
R659, 661	Chip resistor	8.2k ohm	1/8W	±5%		202-822J-2B00-140
R662, 736, 931, 932, 940, 960, 961	Chip resistor	100k ohm	1/8W	±5%		202-104J-2B00-140
R670, 903	Chip resistor	2.7k ohm	1/8W	±5%		202-272J-2B00-140
R906	Chip resistor	820 ohm	1/8W	±5%		202-821J-2B00-140
V50	Transistor 2SD2133(Q)				ETTD-2SD2133	302-0200-1101-003
V51, 59, 652, 922, 923	Transistor 2SC2712(Y)				ETTC-2SC2712	302-0173-1101
V52, 104, 654, 903, 916	Transistor DTA124EK				ETTA-DTA124EK	301-0091-0001
V53, 904, 909, 917, 918, 919, 920, 921, 925	Transistor DTC124EK				ETTC-DTC124EK	302-0192-0001
V54	Regulator IC AN8005				ETI-AN8005	310-0243-0000
V55	Transistor 2SD1802(T) (Straight read)				ETTD-2SD1802	302-0189-1200-012
V60	Transistor 2SB1202(T)				ETTB-2SB1202	301-0090-1200-012
V101	Pre amplifier IC TA7705F				ETI-TA7705F	310-0399-0000

REF. NO.	DESCRIPTION	PART NO.	MFR'S NO.
V102	OP amplifier IC M5218FP	ETI-M5218FP	310-0358-0000
V103	Analog switch IC μPD4066BG	ETI-μPD4066BG	310-0322-0000
V105, 106, 108	OP amplifier IC M5228FP	ETI-M5228FP	310-0401-0000
V107	Electronic volume IC LC7537AN	ETI-LC7537AN	310-0402-0000
V109, 209, 309, 409	Transistor 2SD596D(V3)	ETTD-2SD596D	302-0194-1401-028
V651	FM NB, MPX IC STK3400A	ETI-STK3400A	310-0310-0000
V653, 733, 908, 924	Transistor 2SA1162(Y)	ETTA-2SA1162	301-0088-1101-006
V655	Transistor 2SB1122(T)	ETTB-2SB1122	301-0089-1201-012
V731, 732, 901, 902	Transistor 2SC2712(G)	ETTC-2SC2712	302-0173-1201
V905	PLL IC LM7001	ETI-LM7001	310-0398-0000
V906	Transistor 2SC1615GL	ETTC-2SC1615	302-0188-1101
V907	Transistor DTA114EK	ETTA-DTA114EK	301-0092-0001
V910	Transistor DTC114EK	ETTC-DTC114EK	302-0140-0001
V911	Main control micro computer μPD75108G	ETI-μPD75108G	310-0396-0000
V914	Transistor DTC144EK	ETTC-DTC144EK	302-0149-0001
V915	Reset IC PST529DMT	ETI-PST529DMT	310-0403-1101
W901	Resistor array	ECX-0109	370-0109-0100
	Jumper chip		209-0004-0000

POWER AMPLIFIER CIRCUIT BOARD COMPONENT LOCATION GUIDE

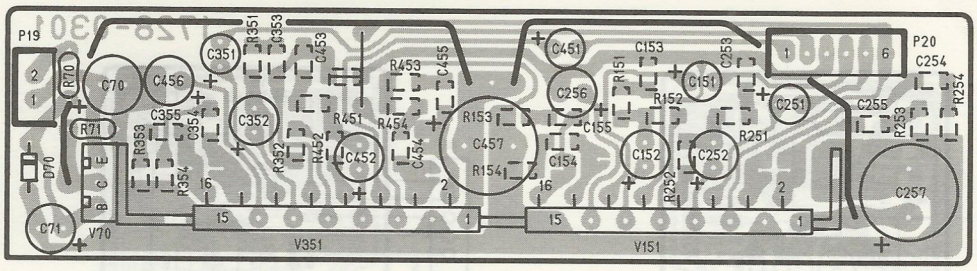

TOP VIEW

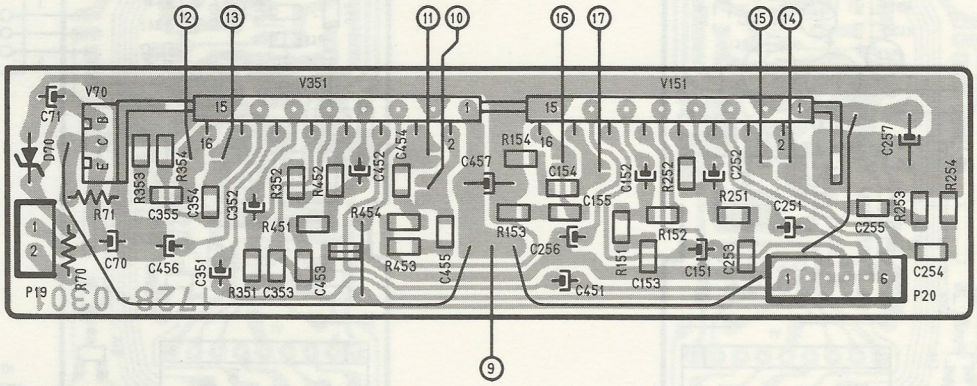

BOTTOM VIEW

REF. NO.46 CAP-1685-1 POWER AMPLIFIER CIRCUIT BOARD ASSEMBLY PARTS LIST

REF. NO.	DESCRIPTION				PART NO.	MFR'S NO.
	Power amplifier printed circuit board					440-1728-0301
C70	Electrolytic capacitor	220μF	10V			250-221M-1A00-036
C71	Electrolytic capacitor	47μF	16V			250-470M-1C00-025
C151, 251, 351, 451	Electrolytic capacitor	1μF	50V			250-1R0M-1H00-114
C152, 252, 352, 452	Electrolytic capacitor	100μF	10V			250-101M-1A00-025
C153, 253, 353, 453	Chip capacitor	0.047μF	25V			263-473M-1EJB-311
C154, 155, 254, 255, 354, 355, 454, 455	Chip capacitor	0.1μF	25V			263-104M-1EJB-312
C256, 456	Electrolytic capacitor	100μF	16V			250-101M-1C00-025
C257, 457	Electrolytic capacitor	1000μF	16V			250-102M-1C00-057
D70	Zener diode HZS9.1N(B2)				ETD-HZS9.1N	306-0100-1101
P19	2P plug				ESC-0241	412-0241-0000
P20	6P plug				ESC-0275	412-0275-0000
R70	Carbon film resistor	1k ohm	1/6W	±5%		200-102J-2C00-110
R71	Carbon film resistor	1.5k ohm	1/6W	±5%		200-152J-2C00-110
R151, 251, 351, 451	Chip resistor	220 ohm	1/8W	±5%		202-221J-2B00-140
R152, 252, 352, 452	Chip resistor	68 ohm	1/8W	±5%		202-680J-2B00-140
R153, 154, 253, 254, 353, 354, 453, 454	Chip resistor	2.2 ohm	1/8W	±5%		202-2R2J-2B00-140
V70	Transistor 2SD1682(T)				ETTD-2SD1682	302-0190-1200-012
V151, 351	Power amplifier IC AN7173K				ETI-AN7173K	310-0404-0000
	Jumper chip					209-0004-0000

MECHANISM CONTROL CIRCUIT BOARD COMPONENT LOCATION GUIDE

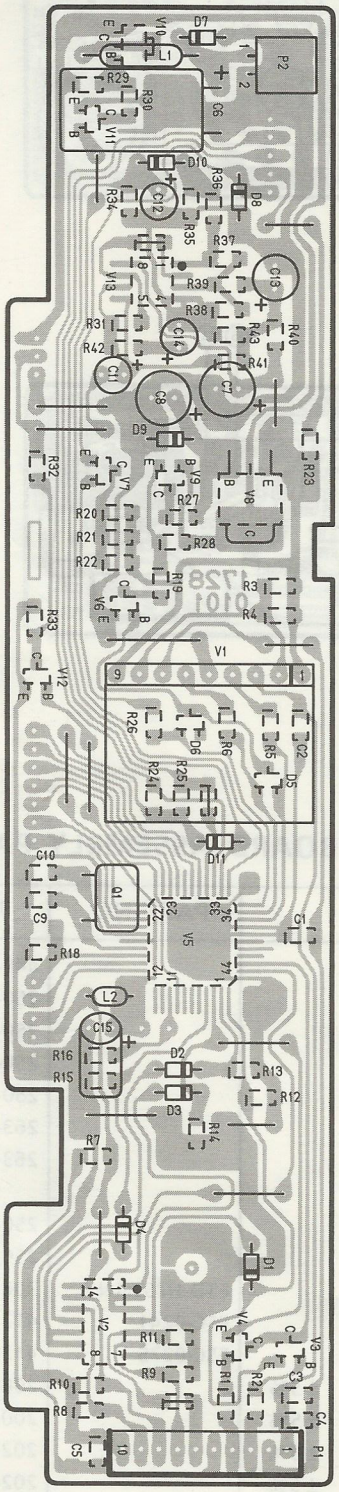

TOP VIEW

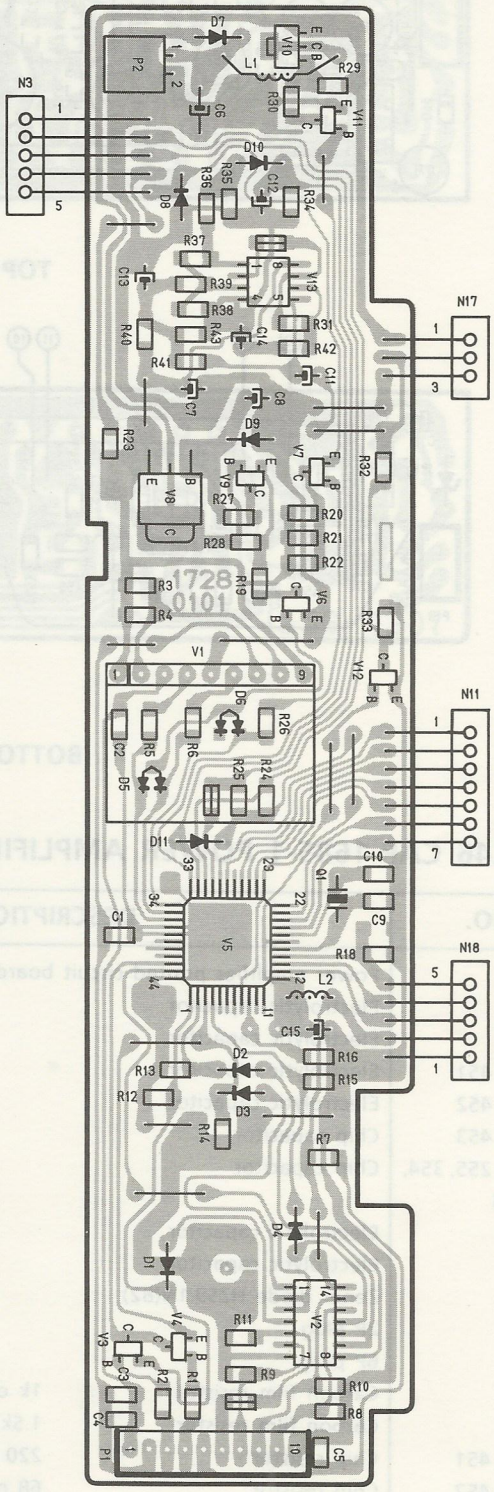

BOTTOM VIEW

REF. NO.22 CTP-1683-1 MECHANISM CONTROL CIRCUIT BOARD ASSEMBLY PARTS LIST

REF. NO.	DESCRIPTION				PART NO.	MFR'S NO.
	Mechanism control printed circuit board					440-1728-0101
C1, 2, 3, 4, 5	Chip capacitor	0.022μF	25V			263-223M-1EJB-310
C6	Electrolytic capacitor	1000μF	16V			250-102M-1C00-057
C7, 8	Electrolytic capacitor	33μF	16V			250-330M-1C00-132
C9, 10	Chip capacitor	33pF	50V			265-330J-1HCH-310
C11	Electrolytic capacitor	0.1μF	50V			250-R10M-1H00-111
C12	Electrolytic capacitor	1μF	50V			250-1R0M-1H00-111
C13	Electrolytic capacitor	47μF	6.3V			250-470M-0J00-120
C14	Electrolytic capacitor	3.3μF	50V			250-3R3M-1H00-111
C15	Electrolytic capacitor	22μF	6.3V			250-220M-0J00-010
D1, 2, 3, 4, 7, 8, 10, 11	Diode MA165				ETD-MA165	304-0037-0001
D5, 6	Diode 1S2837				ETD-1S2837	304-0093-0001
D9	Zener diode HZS11N(B1)				ETD-HZS11N	306-0102-1001
L1	Inductor 3.3μH				ELD-0380	351-0380-1200
L2	Inductor 220μH				ELD-0379	351-0379-1201
P6	2P plug				ESC-0445	412-0445-0000
P1	10P plug				ESC-0446	412-0446-0000
Q1	Ceramic resonator 4.19MHz				EOC-0033	361-0033-0400
R1, 2	Chip resistor	330k ohm	1/8W	±5%		202-334J-2B00-140
R3, 4	Chip resistor	4.7 ohm	1/8W	±5%		202-4R7J-2B00-140
R5, 6, 12, 13, 14, 15, 26, 28	Chip resistor	10k ohm	1/8W	±5%		202-103J-2B00-140
R7	Chip resistor	1k ohm	1/8W	±5%		202-102J-2B00-140
R8, 9, 10, 11, 16, 41	Chip resistor	100k ohm	1/8W	±5%		202-104J-2B00-140
R18, 29, 31	Chip resistor	47k ohm	1/8W	±5%		202-473J-2B00-140
R19	Chip resistor	2.7k ohm	1/8W	±5%		202-272J-2B00-140
R20, 21, 22	Chip resistor	560 ohm	1/8W	±5%		202-561J-2B00-140
R23	Chip resistor	470 ohm	1/8W	±5%		202-471J-2B00-140
R24, 25, 37	Chip resistor	39k ohm	1/8W	±5%		202-393J-2B00-140
R27	Chip resistor	220 ohm	1/8W	±5%		202-221J-2B00-140
R30, 40, 43	Chip resistor	2.2k ohm	1/8W	±5%		202-222J-2B00-140
R32	Chip resistor	15k ohm	1/8W	±5%		202-153J-2B00-140
R33	Chip resistor	150k ohm	1/8W	±5%		202-154J-2B00-140
R34	Chip resistor	22k ohm	1/8W	±5%		202-223J-2B00-140
R35	Chip resistor	6.8k ohm	1/8W	±5%		202-682J-2B00-140
R36	Chip resistor	3.3k ohm	1/8W	±5%		202-332J-2B00-140
R38	Chip resistor	68k ohm	1/8W	±5%		202-683J-2B00-140
R39	Chip resistor	18k ohm	1/8W	±5%		202-183J-2B00-140
R42	Chip resistor	68 ohm	1/8W	±5%		202-680J-2B00-140
V1	Motor drive IC M54543AL				ETI-M54543AL	310-0400-0000
V2	Analog switch IC μPD4066BG				ETI-μPD4066BG	310-0322-0000
V3, 4, 7	Transistor 2SC2712(Y)				ETTC-2SC2712	302-0173-1101
V5	Mechanism control IC μPD7508HG				ETI-μPD7508HG	310-0397-0000
V6, 11, 12	Transistor DTC124EK				ETTC-DTC124EK	302-0192-0001
V8	Transistor 2SD1802(T)				ETTD-2SD1802	302-0191-1201-012
V9	Transistor 2SA1162(Y)				ETTA-2SA1162	301-0088-1101-006
V10	Transistor 2SB1122(T)				ETTB-2SB1122	301-0089-1201-012
V13	OP amplifier IC M5218FP				ETI-M5218FP	310-0358-0000
	Jumper chip					209-0004-0000

SWITCH CIRCUIT BOARD COMPONENT LOCATION GUIDE

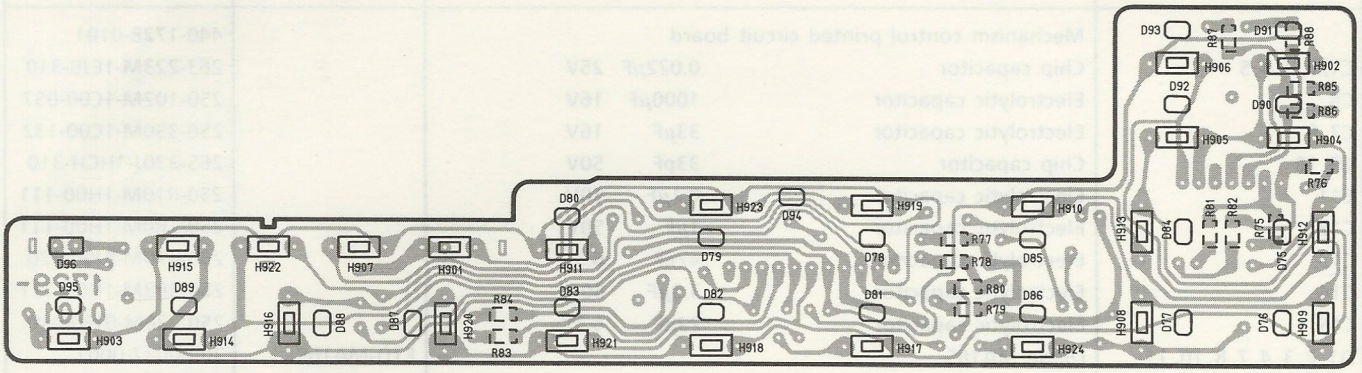

TOP VIEW

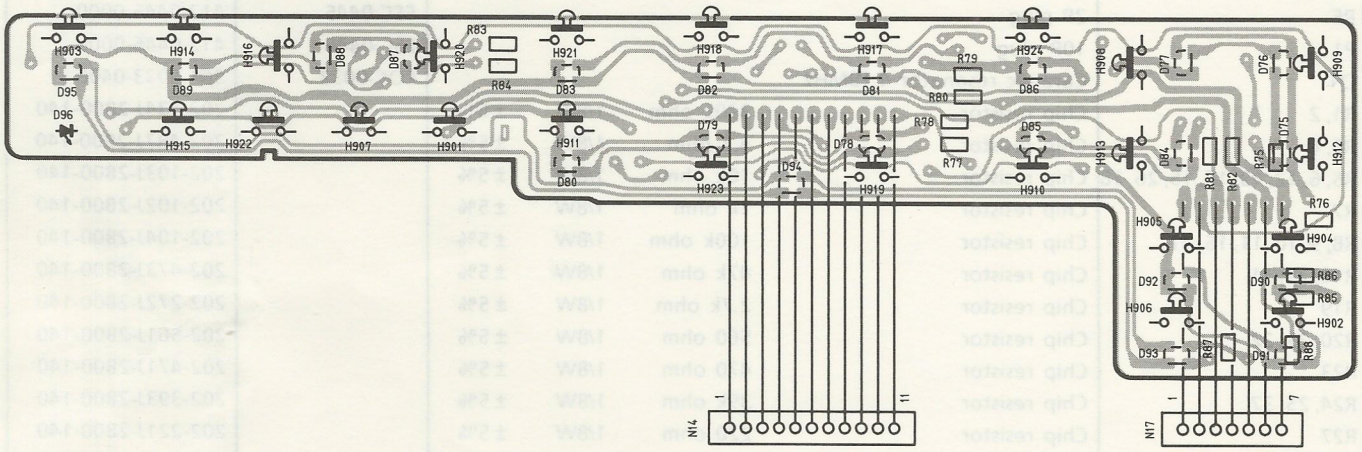

BOTTOM VIEW

REF. NO.5 CTP-1687 SWITCH CIRCUIT BOARD ASSEMBLY PARTS LIST

REF. NO.	DESCRIPTION	PART NO.	MFR'S NO.
	Switch printed circuit board		440-1729-0101
D75, 76, 77, 78, 79, 80, 81, 82, 83, 84, 85, 86, 87, 88, 89, 90, 91, 92, 93, 94, 95	LED AABG1201W	ETD-AABG1201W	320-0095-0001
D96	LED BR4524K	ETD-BR4524K	320-0108-0000
H901, 902, 903, 904, 905, 906, 907, 908, 909, 910, 911, 912, 913, 914, 915, 916, 917, 918, 919, 920, 921, 922, 923, 924	Tact switch	ESS-0511	400-0511-0100
R75, 76, 77, 78, 79, 80, 81, 82, 83, 84, 85, 86, 87, 88	Chip resistor 330 ohm 1/8W ±5%		202-331J-2B00-140

DOLBY CIRCUIT BOARD COMPONENT LOCATION GUIDE

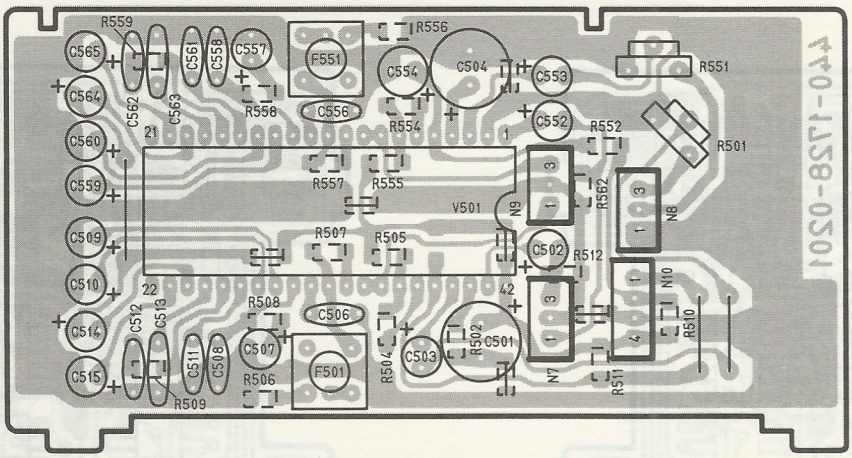

TOP VIEW

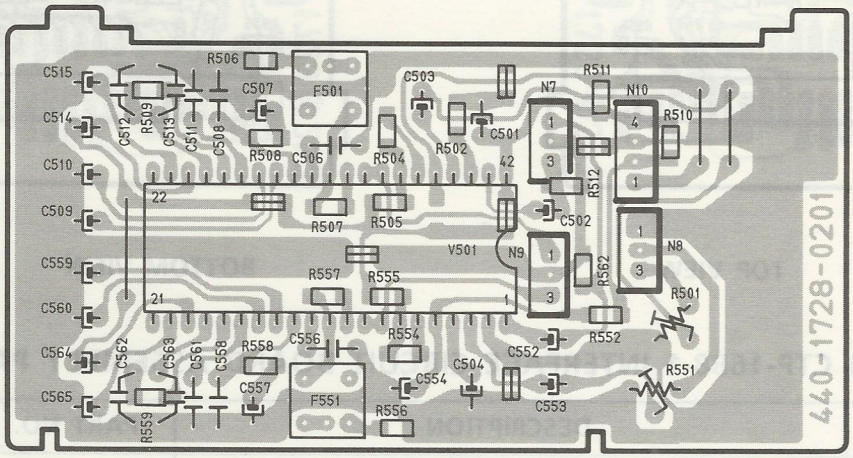

BOTTOM VIEW

REF. NO.31 CTP-1684-1 DOLBY CIRCUIT BOARD ASSEMBLY PARTS LIST

REF. NO.	DESCRIPTION				PART NO.	MFR'S NO.
	Dolby printed circuit board					440-1728-0201
C501	Electrolytic capacitor	220μF	10V			250-221M-1A00-047
C502, 503, 510, 515, 552, 553, 560, 565	Electrolytic capacitor	2.2μF	50V			250-2R2M-1H00-114
C504	Electrolytic capacitor	470μF	10V			250-471M-1A00-047
C506, 512, 556, 562	Monolithic capacitor	0.01μF	25V	±5%		262-103J-1EJR-106
C507, 557	Electrolytic capacitor	1μF	50V			250-1R0M-1H00-114
C508, 511, 558, 561	Monolithic capacitor	0.018μF	25V	±10%		262-183K-1EJR-111
C509, 514, 559, 564	Electrolytic capacitor	0.68μF	50V			250-R68M-1H00-114
C513, 563	Monolithic capacitor	0.082μF	25V	±10%		262-823K-1EJR-135
C554	Electrolytic capacitor	47μF	10V			250-470M-1A00-122
F501, 551	Dolby C coil				ELD-0307	351-0307-0900
P7	3P plug				ESC-0272	412-0272-0000
P8, 9	3P plug				ESC-0203	412-0203-0000
P10	4P plug				ESC-0273	412-0273-0000
R501, 551	Trimmer resistor 10k ohm-B				ECRV-1013	340-1013-0200
R502	Chip resistor	22k ohm	1/8W	±5%		202-223J-2B00-140
R504, 554	Chip resistor	2.2k ohm	1/8W	±5%		202-222J-2B00-140
R505, 555	Chip resistor	5.6k ohm	1/8W	±5%		202-562J-2B00-140
R506, 556	Chip resistor	1k ohm	1/8W	±5%		202-102J-2B00-140
R507, 557	Chip resistor	3.3k ohm	1/8W	±5%		202-332J-2B00-140
R508, 558	Chip resistor	68k ohm	1/8W	±5%		202-683J-2B00-140
R509, 559	Chip resistor	100 ohm	1/8W	±5%		202-101J-2B00-140
R510, 511, 552	Chip resistor	10k ohm	1/8W	±5%		202-103J-2B00-140
R512, 562	Chip resistor	47k ohm	1/8W	±5%		202-473J-2B00-140
V501	Dolby IC HA12088ANT				ETI-HA12088ANT	310-0241-0000
	Jumper chip					209-0004-0000

INTERFACE CIRCUIT BOARD COMPONENT LOCATION GUIDE

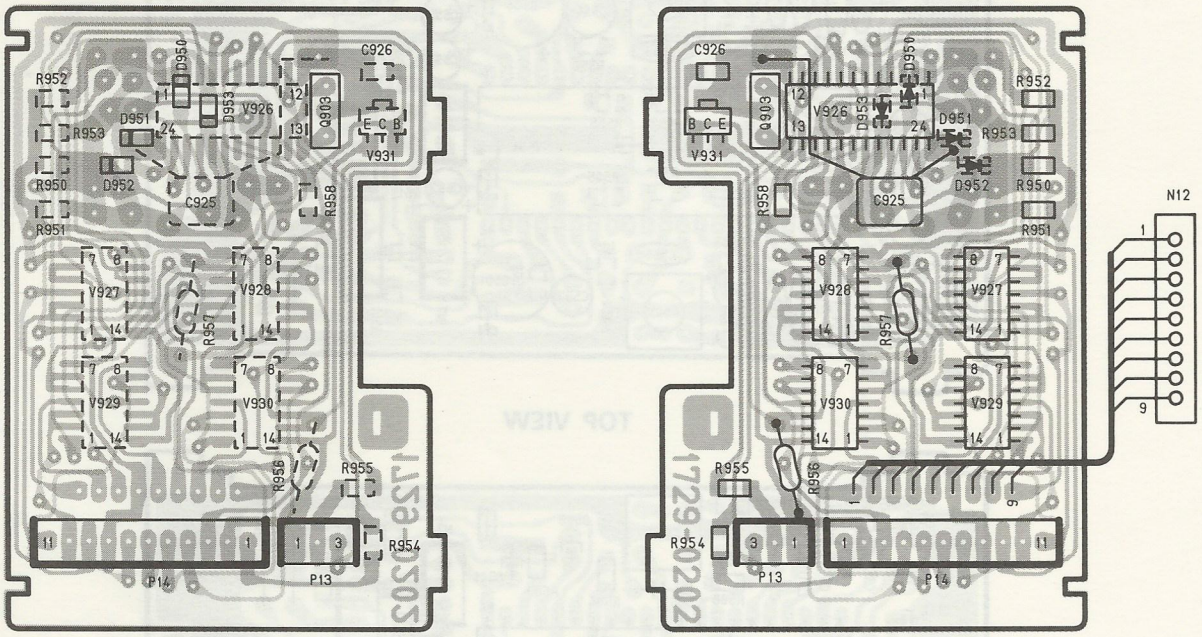

TOP VIEW BOTTOM VIEW

REF. NO.29 CTP-1688-1 INTERFACE CIRCUIT BOARD ASSEMBLY PARTS LIST

REF. NO.	DESCRIPTION				PART NO.	MFR'S NO.
	Interface printed circuit board					440-1729-0202
C925	Solid aluminum capacitor	22μF	6.3V			253-220M-0J00-031
C926	Chip capacitor	0.1μF	25V			263-104M-1EJB-312
D950, 951, 952, 953	Diode RLS73				ETD-RLS73	304-0073-0001
P13	3P plug				ESC-0272	412-0272-0000
P14	11P plug				ESC-0420	412-0420-0000
Q903	Ceramic resonator 500kHz				EOC-0041	361-0041-0400
R950, 951, 952, 953, 958	Chip resistor	47k ohm	1/8W	±5%		202-473J-2B00-140
R954	Chip resistor	220 ohm	1/8W	±5%		202-221J-2B00-140
R956, 957	Carbon film resistor	47k ohm	1/6W	±5%		200-473J-2C00-010
R955	Chip resistor	10k ohm	1/8W	±5%		202-103J-2B00-140
V926	Interface micro computer μPD17104GS				ETI-μPD17104GS	310-0405-0000
V927, 928, 929, 930	Analog switch IC μPD4066BG				ETI-μPD4066BG	310-0322-0000
V931	Reset IC PST529DMT				ETI-PST529DMT	310-0403-1101

LCD DISPLAY CIRCUIT BOARD COMPONENT LOCATION GUIDE

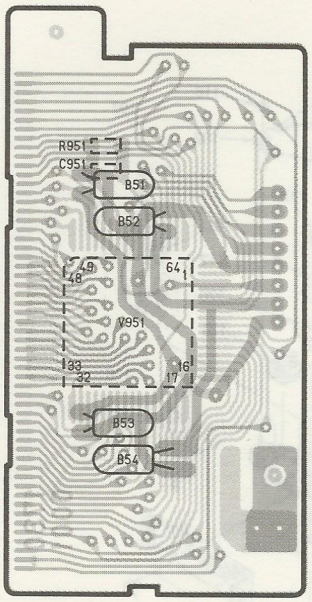

TOP VIEW

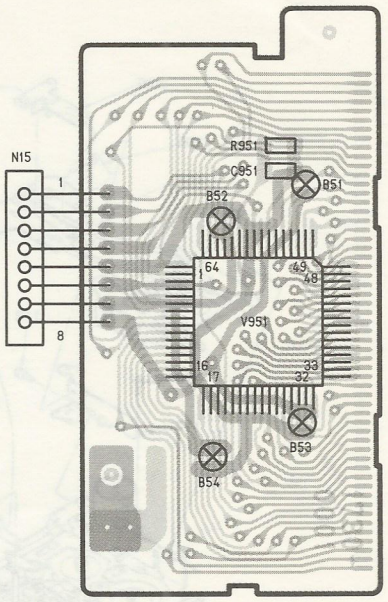

BOTTOM VIEW

REF. NO.18 CTP-1686-1 LCD DISPLAY CIRCUIT BOARD ASSEMBLY PARTS LIST

REF. NO.	DESCRIPTION	PART NO.	MFR'S NO.
	LCD display printed circuit board		440-1730-0001
B50, 51, 52, 53	Pilot lamp	EIL-0231	430-0231-0000
C951	Chip capacitor 680pF 50V		263-681K-1HJB-310
R951	Chip resistor 51k ohm 1/8W ±5%		202-513J-2B00-140
V951	LCD driver IC LC7582	ETI-LC7582	310-0406-0000

FILTER CIRCUIT BOARD COMPONENT LOCATION GUIDE

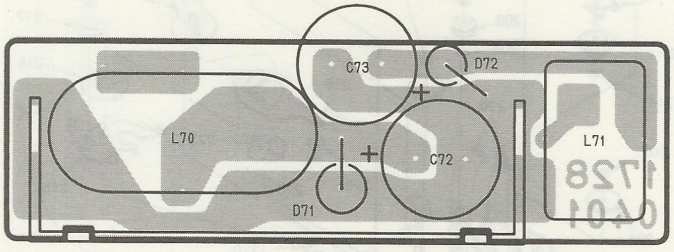

TOP VIEW

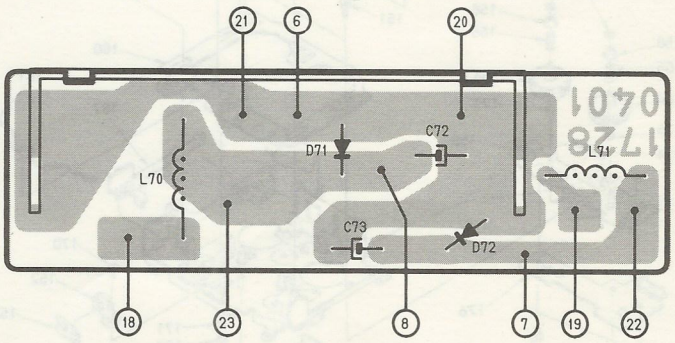

BOTTOM VIEW

REF. NO.47 CTP-1682-1 FILTER CIRCUIT BOARD ASSEMBLY PARTS LIST

REF. NO.	DESCRIPTION	PART NO.	MFR'S NO.
	Filter printed circuit board		440-1728-0401
C72	Electrolytic capacitor 3300μF 16V		250-332M-1C40-067
C73	Electrolytic capacitor 2200μF 16V		250-222M-1C40-066
D71	Diode DSM3A-4	ETD-DSM3A	304-0099-1200
D72	Diode ERC04-02F	ETD-ERC04	304-0081-1000
L70	Toroidal coil	ELD-0321	351-0321-1500
L71	Toroidal coil	ELD-0213	351-0213-1400
	Holder - IC	PL-7214	100-7214-0000

EXPLODED VIEW - MECHANISM

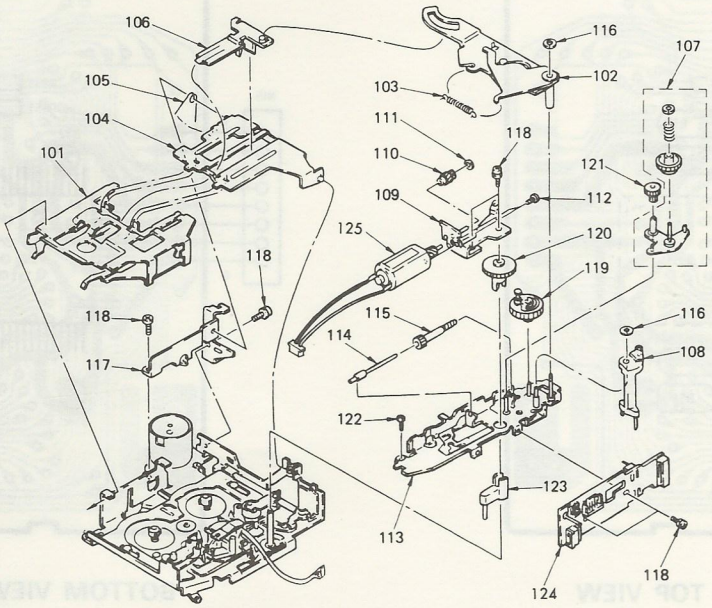

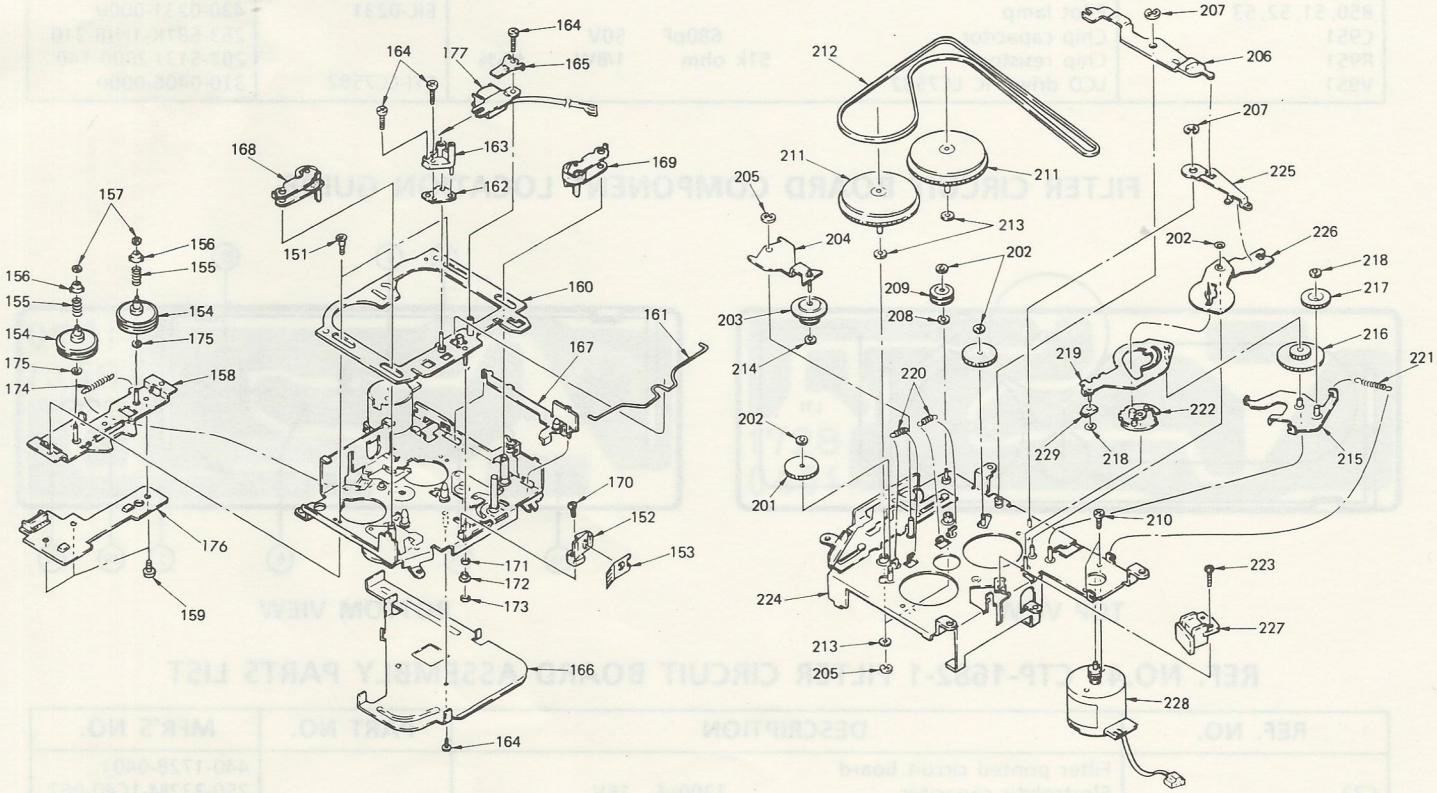

MECHANICAL PARTS LIST – MECHANISM

REF. NO.	DESCRIPTION	PART NO.	MFR'S NO.
101	Cassette tray	PL-7516	100-7516-0000
102	Suction arm ass'y	AA-1255	179-1255-0000
103	Suction arm spring	SC-2145	160-2145-0000
104	Cassette tray arm ass'y	CMK-1538	610-1538-0000
105	Tray arm spring	SC-2146	160-2146-0000
106	Cassette catcher	MP-4547	131-4547-0000
107	Driving arm gear ass'y	CMK-1539	610-1539-0000
108	Reverse arm	MM-0232	130-0232-0000
109	Motor bracket ass'y	CMK-1540	610-1540-0000
110	Driving gear (A)	MP-4548	131-4548-0000
111	Polyslider washer (Cut) 1.2×2.5×0.25	PN-1180	101-1180-0000
112	Pan head screw 2×2.5 (Precision)	006225	000-0200-0250-121
113	Control chassis ass'y	CMK-1541	610-1541-0000
114	Driving gear (B) shaft	CC-3129	150-3129-0000
115	Driving gear (B)	MP-4549	131-4549-0000
116	Polyslider washer (Cut) 1.2×3.5×0.25	PN-1181	101-1181-0000
117	Cassette tray arm bracket	PL-7517	100-7517-0000
118	SEMS screw 2×4	093204	050-0200-0400-120
119	Loading cam gear ass'y	AA-1256	179-1256-0000
120	Mode gear	MP-4550	131-4550-0000
121	Friction gear (A)	MP-4551	131-4551-0000
122	Pan head screw 2×4	006204	000-0200-0400-020
123	Mode arm ass'y	AA-1257	179-1257-0000
124	Switch PC board ass'y	CTP-1711	600-1711-0000
125	Motor sub ass'y	CTT-0574	608-0574-0000
151	Collar screw		009-0020-0000
152	Contact switch holder	MP-4552	131-4552-0000
153	Contact switch	PL-7518	100-7518-0000
154	Reel table ass'y	AA-1258	179-1258-0000
155	Reel spring	SC-2147	160-2147-0000
156	Reel cap	MP-4553	131-4553-0000
157	Polyslider washer (Cut) 1.8×3.5×0.25	PN-1182	101-1182-0000
158	Reel table bracket ass'y	CMK-1542	610-1542-0000
159	Pan head screw 2×2.5 (Precision)	006225	000-0200-0250-121
160	Head base ass'y	CMK-1543	610-1543-0000
161	Spring	SC-2148	160-2148-0000
162	Head seam	PN-1183	101-1183-0000
163	Head arm	MP-4554	131-4554-0000
164	Pan head screw 1.4×4 (Precision)	006144	000-0140-0400-121
165	Head retainer	PL-7519	100-7519-0000
166	Cover	PL-7520	100-7520-0000
167	Reverse conversion level ass'y	CMK-1544	610-1544-0000
168	Pinch roller arm (F) ass'y	AA-1259	179-1259-0000
169	Pinch roller arm (R) ass'y	AA-1260	179-1260-0000
170	Pan head screw 1.4×2.5 (Precision)	0061425	000-0140-0250-122
171	Head base roller (B)	CC-3130	150-3130-0000
172	Head base roller (A)	CC-3131	150-3131-0000
173	Polyslider washer (Cut) 1.2×3.5×0.25	PN-1181	101-1181-0000
174	Cam lock lever spring	SC-2149	160-2149-0000
175	Polyslider washer 2.1×3.5×0.25	PN-1185	101-1185-0000
176	Reel PC board ass'y	CTP-1712	600-1712-0000
177	Autoreverse head ass'y	CTT-0575	608-0575-0000

REF. NO.	DESCRIPTION	PART NO.	MFR'S NO.
201	Play gear	MP-4555	131-4555-0000
202	Polyslider washer (Cut) 1.2 x 3.5 x 0.25	PN-1181	101-1181-0000
203	FR gear ass'y	AA-1261	179-1261-0000
204	FR arm ass'y	CMK-1545	610-1545-0000
205	E-ring D1.5 x 0.3	030153	080-0150-0000
206	Power arm	PL-7521	100-7521-0000
207	E-ring D2.0 x 0.4	030204	080-0200-0000
208	Polyslider washer 1.8 x 3.2 x 0.15	PN-1184	101-1184-0000
209	Midway pulley	AA-0011	170-0011-0000
210	Pan head screw 2 x 2.5 (Precision)	006225	000-0200-0250-121
211	Flywheel ass'y	AA-0012	170-0012-0000
212	Belt	MP-4556	131-4556-0000
213	Polyslider washer 2.1 x 3.5 x 0.25	PN-1185	101-1185-0000
214	Polyslider washer (Cut) 1.8 x 3.5 x 0.25	PN-1182	101-1182-0000
215	Reverse gear (B) lever ass'y	CMK-1546	610-1546-0000
216	Reverse gear (B)	MP-4557	131-4557-0000
217	Reverse gear (A)	MP-4558	131-4558-0000
218	Polyslider washer (Cut) 1.2 x 2.5 x 0.25	PN-1180	101-1180-0000
219	Cam lock lever ass'y	CMK-1547	610-1547-0000
220	Play arm spring	SC-2150	160-2150-0000
221	Tension spring	SC-2151	160-2151-0000
222	Reverse cam gear	MP-4559	131-4559-0000
223	Pan head screw 1.4 x 4 (Precision)	006144	000-0140-0400-121
224	Chassis ass'y	CMK-1548	610-1548-0000
225	Loading lever	PL-7522	100-7522-0000
226	Reverse lever ass'y	CMK-1549	610-1549-0000
227	Plunger (A) ass'y	CTP-1713	600-1713-0000
228	Motor ass'y	CTT-0576	608-0576-0000
229	Plunger (B)	PL-7523	100-7523-0000

EXPLODED VIEW - CABINET

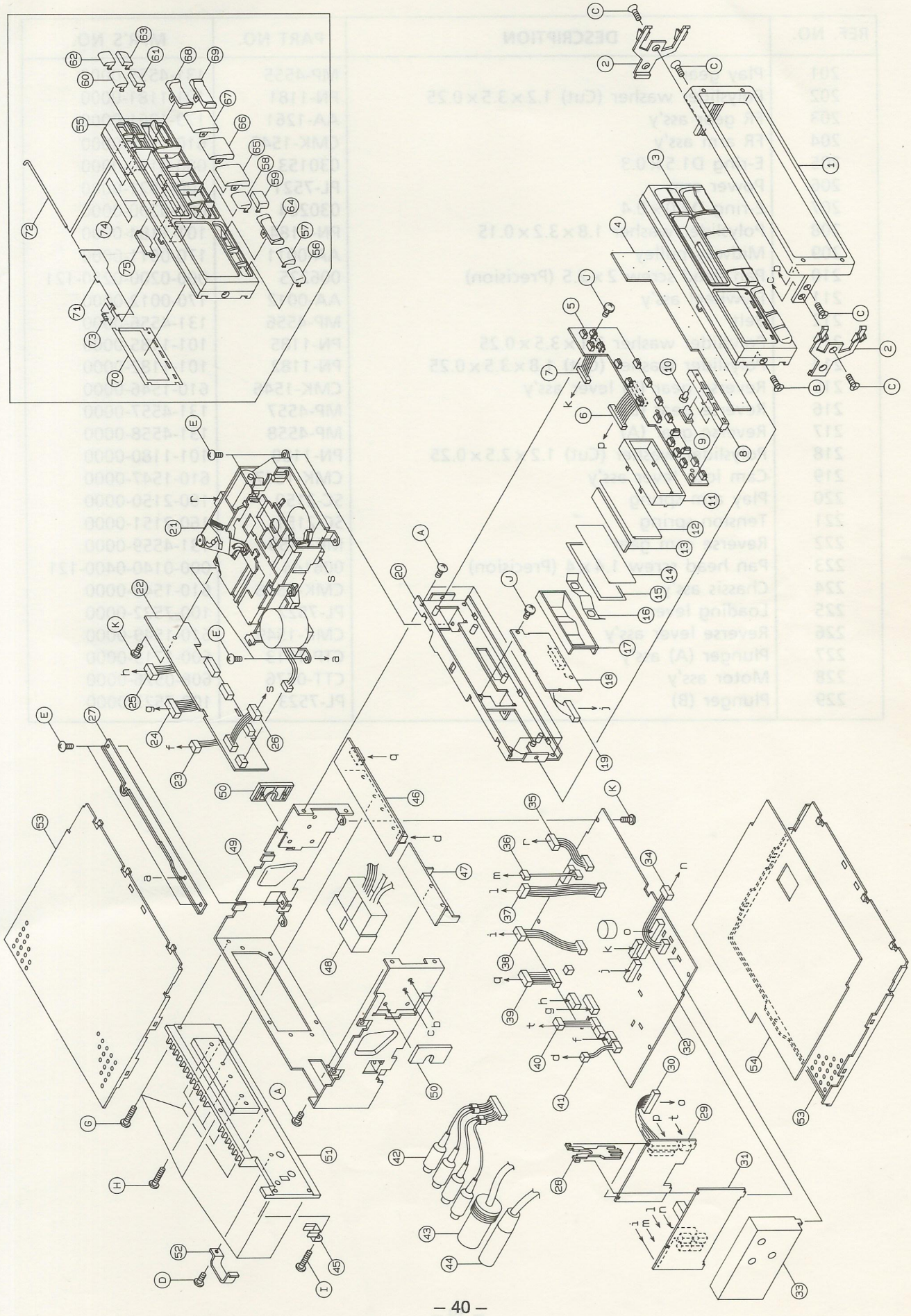

MECHANICAL PARTS LIST – MECHANISM

REF. NO.	DESCRIPTION	PART NO.	MFR'S NO.
1	Trimplate	MP-4257X2-1	131-4257-0201
2	Snap-in spring	PL-7281-2	100-7281-0002
3	Escutcheon ass'y	CMM-0638	613-0638-0000
4	Cushion	PN-1177	101-1177-0000
5	Switch PC board ass'y	CTP-1687	600-1687-0000
6	11P connector with wires	AH-0373	421-0373-0000
7	7P connector with wires	AH-0374	421-0374-0000
8	Holder - Touch button	MP-4525-1	131-4525-0001
9	Touch button (A)	MP-4523	131-4523-0000
10	Touch button (B)	MP-4524	131-4524-0000
11	Holder - LCD	PL-7493-2	100-7493-0002
12	LCD display	EIX-0025	333-0025-0000
13	Conductive rubber connector	MP-4528-2	131-4528-0002
14	LCD back screen (A)	HPN-1586	181-1586-0000
15	LCD back screen (B)	HPN-1583-1	181-1583-0001
16	LCD back screen (C)	HPN-1587X1-1	181-1587-0101
17	Holder - Lamp	MP-4527-1	131-4527-0001
18	LCD display PC board ass'y	CTP-1686-1	600-1686-0001
19	8P connector with wires	AH-0372	421-0372-0000
20	Front chassis ass'y	CMK-1529	610-1529-0000
21	Cassette mechanism	MG-55-31G	626-0013-0000
22	Mechanism control PC board ass'y	CTP-1683-1	600-1683-0001
23	3P connector with wires	AH-0365	421-0365-0000
24	7P connector with wires	AH-0366	421-0366-0000
25	5P connector with wires	AH-0367	421-0367-0000
26	5P connector with wires	AH-0380	421-0380-0000
27	Holder - Mechanism	PL-7491	100-7491-0000
28	Holder - PCB	MP-4529-1	131-4529-0001
29	Interface PC board ass'y	CTP-1688-1	600-1688-0001
30	9P connector with wires	AH-0375	421-0375-0000
31	Dolby PC board ass'y	CTP-1684-1	600-1684-0001
32	Main PC board ass'y	CTP-1681-2	600-1681-0002
33	AM/FM tuner	AR-0221	625-0221-0000
34	3P connector with wires	AH-0283	421-0283-0000
35	6P connector with wires	AH-0379	421-0379-0000
36	3P connector with wires	AH-0369	421-0369-0000
37	4P connector with wires	AH-0370	421-0370-0000
38	3P connector with wires	AH-0371	421-0371-0000
39	6P connector with wires	AH-0256	421-0256-0000
40	3P connector with wires	AH-0376	421-0376-0000
41	2P connector with wires	AH-0364	421-0364-0000
42	RCA jack set	WD-0066	420-0066-0000
43	13P socket with wires	WD-0065	420-0065-0000
44	Aerial socket with cable	AH-0007	425-0007-0000
45	Holder - Aerial socket	PL-2109	100-2109-0000
46	Power amplifier PC board ass'y	CAP-1685-1	600-1685-0001
47	Filter PC board ass'y	CTP-1682-1	600-1682-0001
48	13P plug with wires	AH-0363	421-0363-0000
49	Side chassis	PL-7488-1	100-7488-0001
50	Spacer	MP-4531	131-4531-0000
51	Heatsink plate	MM-0226-2	130-0226-0002
52	Cord holder	PL-7492	100-7492-0000
53	Lid	PL-7489-1	100-7489-0001
54	Insulation paper	PN-1163-1	101-1163-0001
55	Escutcheon	MP-4510-1	131-4510-0001

REF. NO.	DESCRIPTION	PART NO.	MFR'S NO.
56	Button (A)	MP-4515-1	131-4515-0001
57	Button (B)	MP-4516-1	131-4516-0001
58	Button (C)	MP-4517-1	131-4517-0001
59	Button (D)	MP-4518-1	131-4518-0001
60	Button (E)	MP-4519-1	131-4519-0001
61	Button (F)	MP-4520-1	131-4520-0001
62	Button (G)	MP-4521-1	131-4521-0001
63	Button (H)	MP-4522-1	131-4522-0001
64	Button (I)	MP-4511-3	131-4511-0003
65	Button (J)	MP-4512-2	131-4512-0002
66	Button (K)	MP-4512X1-2	131-4512-0102
67	Button (L)	MP-4512X2-2	131-4512-0202
68	Button (M)	MP-4513-2	131-4513-0002
69	Button (N)	MP-4514-2	131-4514-0002
70	Front panel	MP-4530-1	131-4530-0001
71	Cassette door	PL-7316X8	100-7316-0800
72	Door shaft	CS-3089	150-3089-0000
73	Door spring	SC-2143	160-2143-0000
74	Scattering plate	HPN-1584	181-1584-0000
75	Light guide - Door	MP-4526-1	131-4526-0001
A	Pan head screw 2.6 x 3	006263	000-0260-0300-021
B	Flush head screw 2.6 x 4	002264	001-0260-0400-021
C	Flush head screw 3 x 6	002306	001-0300-0600-021
D	Pan head tapping screw 2.6 x 8	086268	010-0260-0800-221
E	Pan head screw 2.6 x 4 (Self tight)	006264ST	020-0260-0400-121
G	Pan head screw 2.6 x 8 (Self tight)	006268ST	020-0260-0800-121
H	Pan head screw 2.6 x 14 (Self tight)	0062614ST	020-0260-1400-121
I	Pan head screw 3 x 8 (Self tight)	006308ST	020-0300-0800-121
J	SEMS screw 2 x 4	093204	050-0200-0400-120
K	SEMS screw 2.6 x 5	093265	050-0260-0500-120

ACCESSORY LIST

DESCRIPTION	Q'TY	PART NO.	MFR'S NO.
Screw kit	1	AS-0211	633-0211-0000
Contains;			
SEMS hexagon screw 5 x 16	1	0945016	055-0500-1600-121
Hexagon nut D5	2	020540	060-0500-0101
Plain washer D5	2	010508	070-0500-0100
Spring washer D5	2	0115210	072-0500-0200
Rear suspension plug	1	MR-0203	131-3203-0000
Bolt	1	CS-525	150-2525-0000
Dismounting bracket	2	PL-2898-1	100-2898-0001
CD mount frame	1	AA-1221X1	179-1221-0100
CD mount spacer	2	HPN-1539	181-1539-0000
Supporting strap	1	PP-0159	100-6159-0000
Demonstration tape	1	EHX-0008	363-0008-2200
13P socket with wires	1	CTT-0091	631-0091-0000
Instruction book	1	HPB-1203	801-1203-0000
Dealer list	1	HPC-0209-4	803-0209-0004
Warranty card	1	HPC-0517	803-0517-0000

SCHEMATIC DIAGRAM

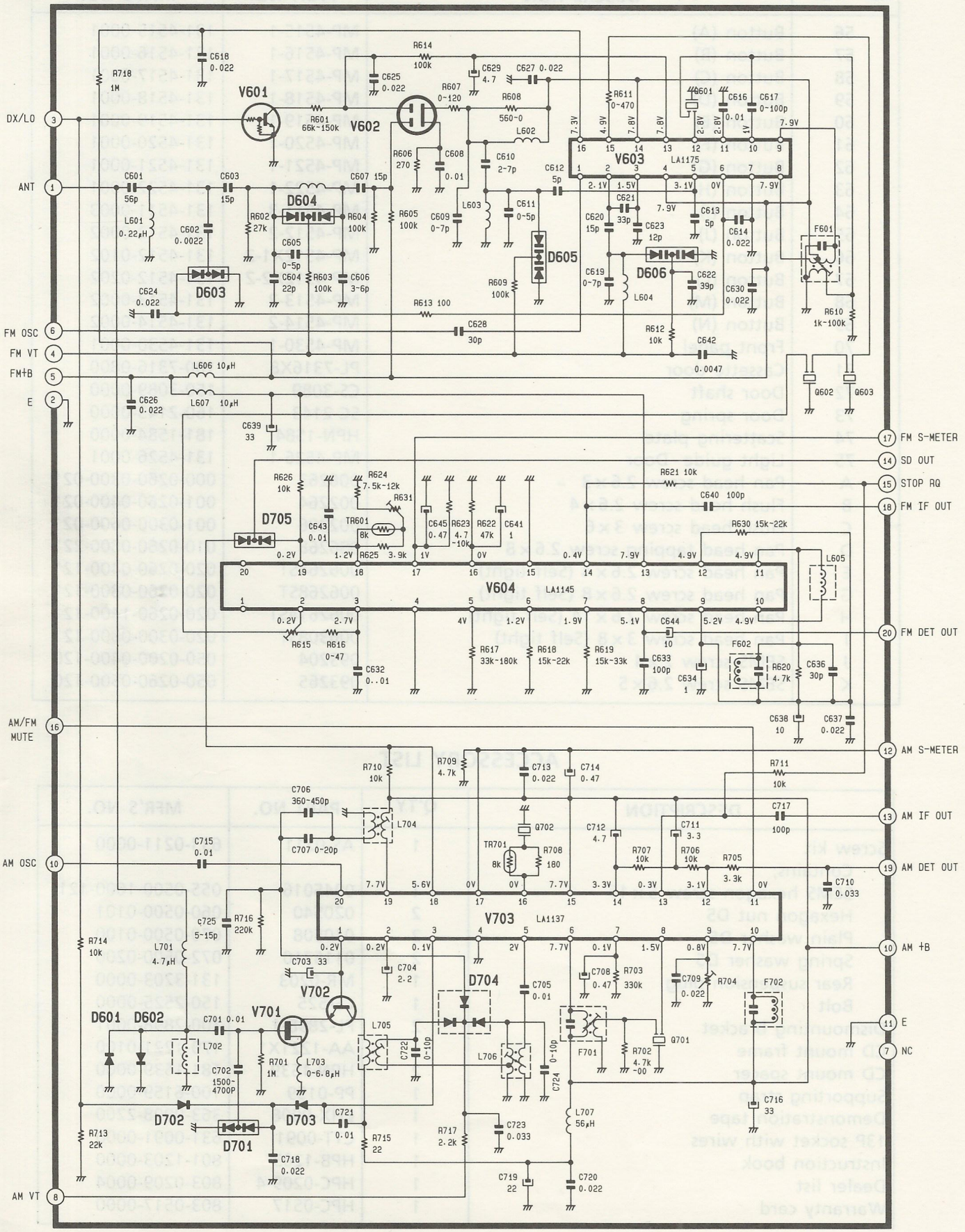

SCHEMATIC DIAGRAM

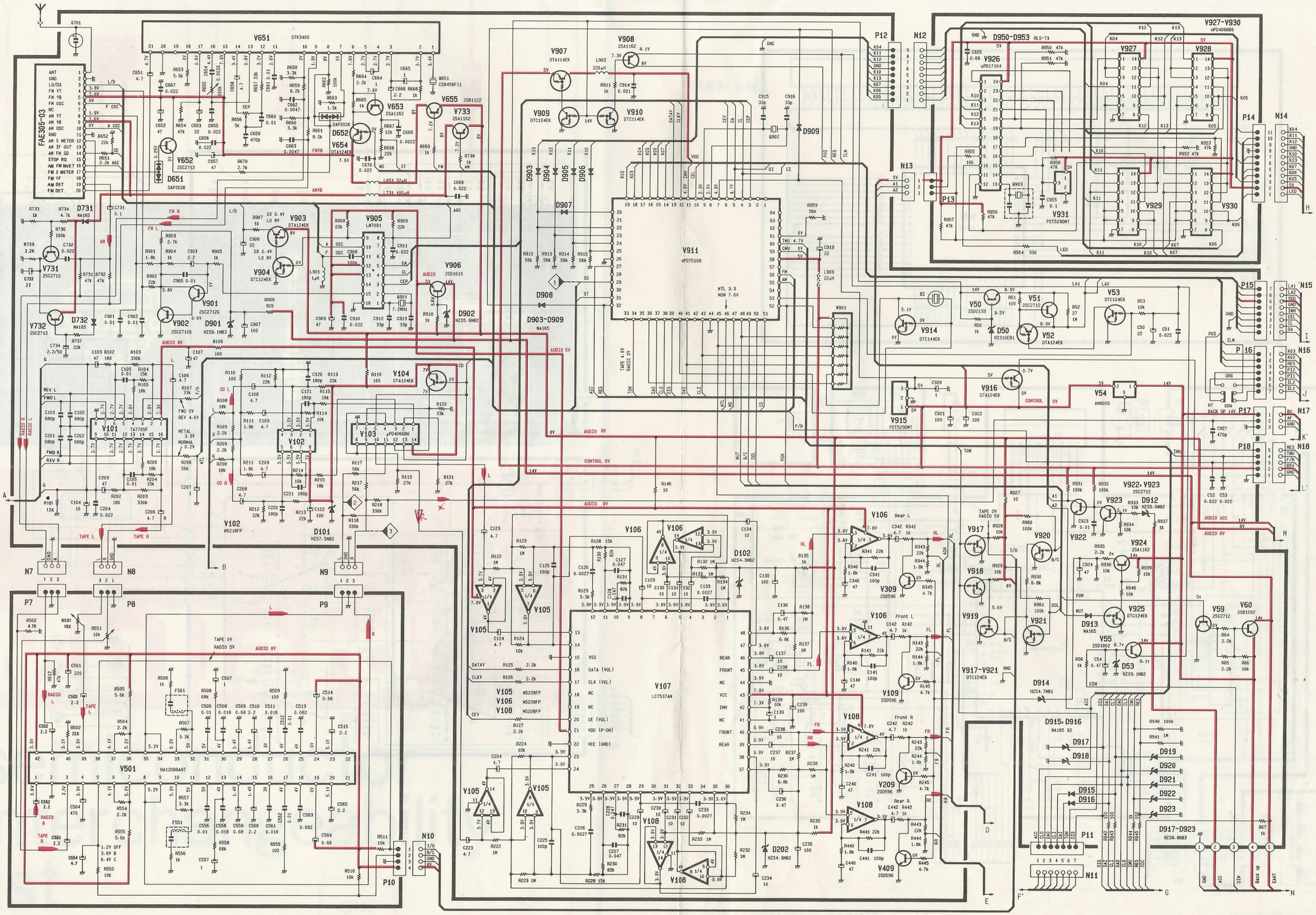

SCHEMATIC DIAGRAM

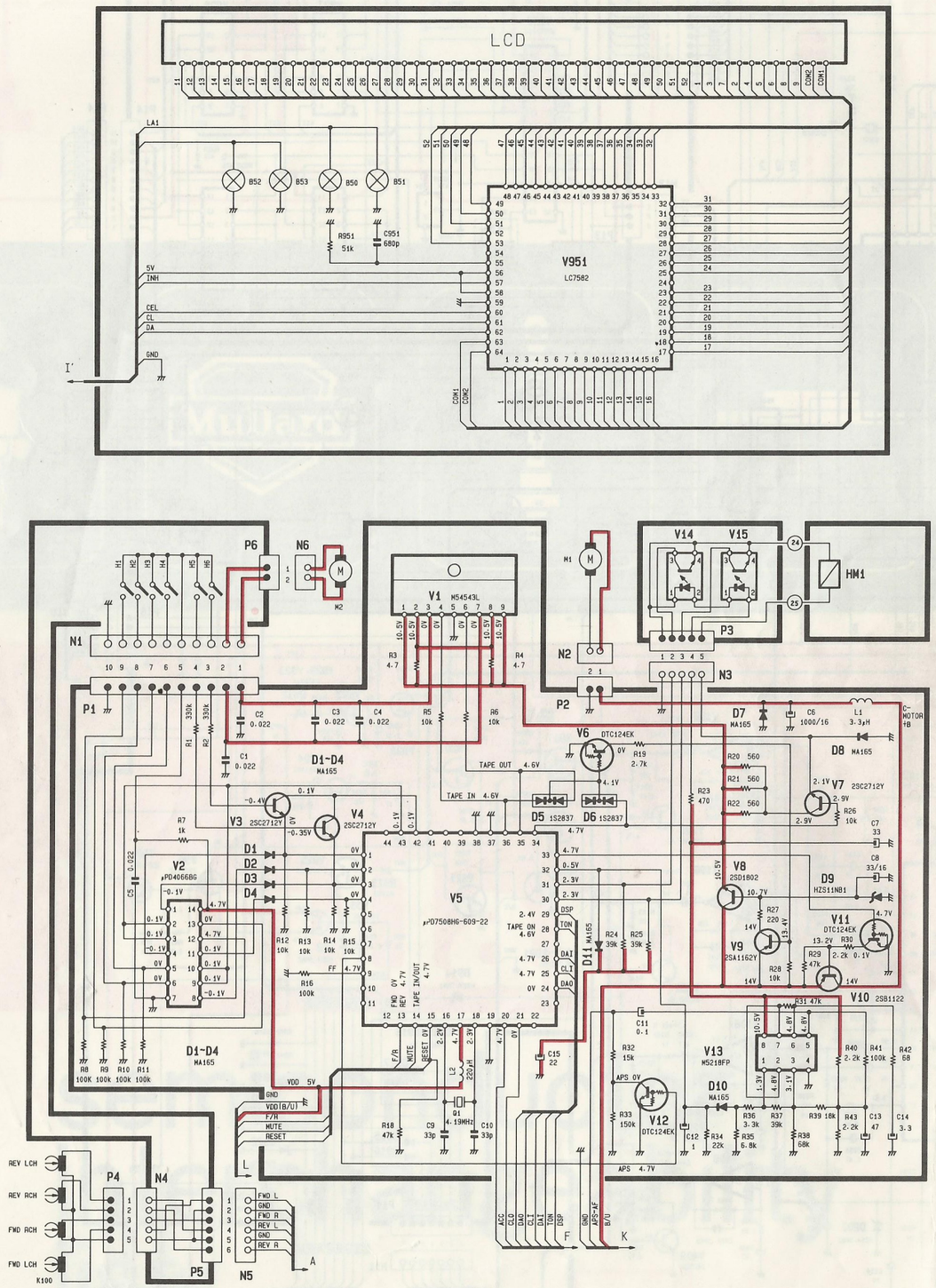

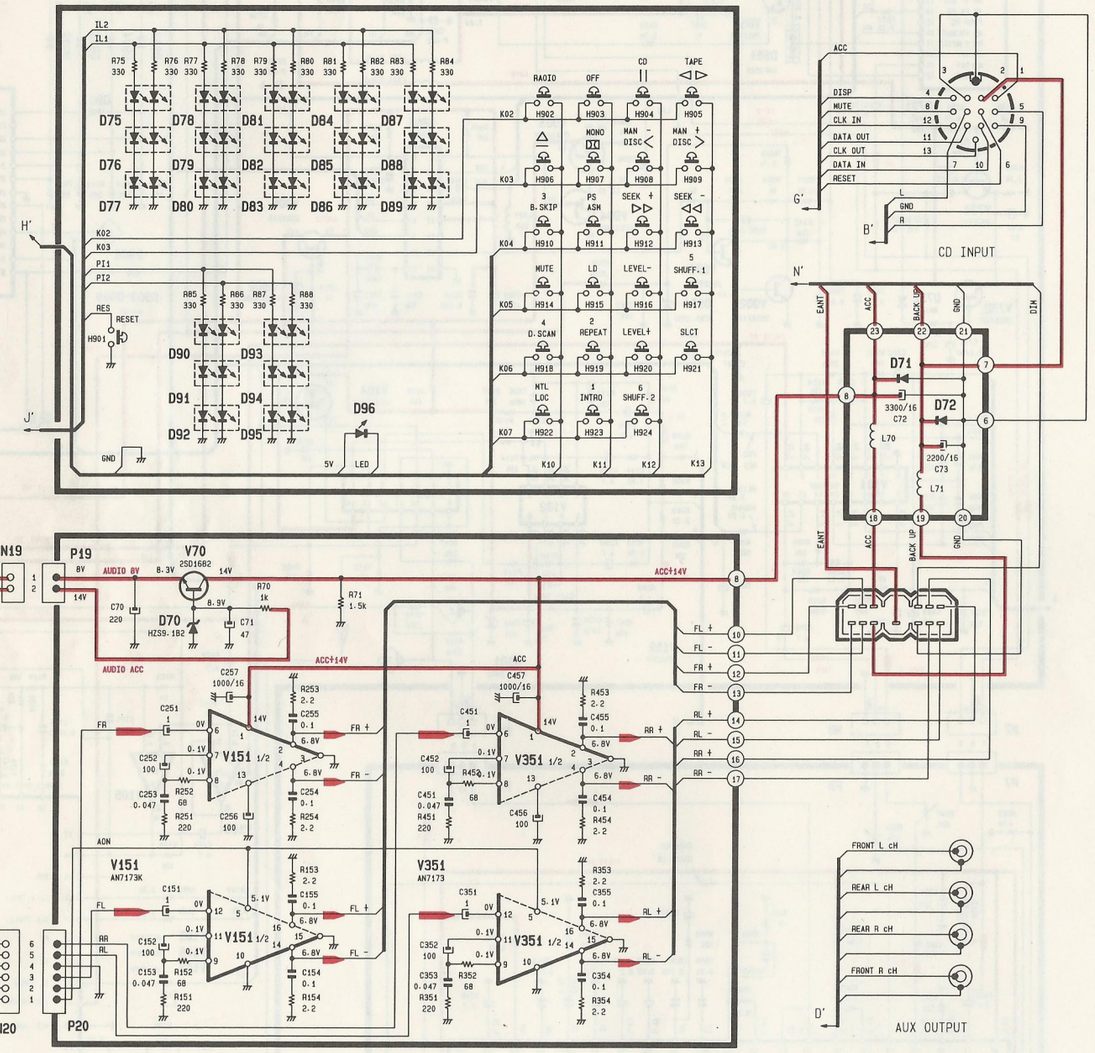

WIRING LAYOUT

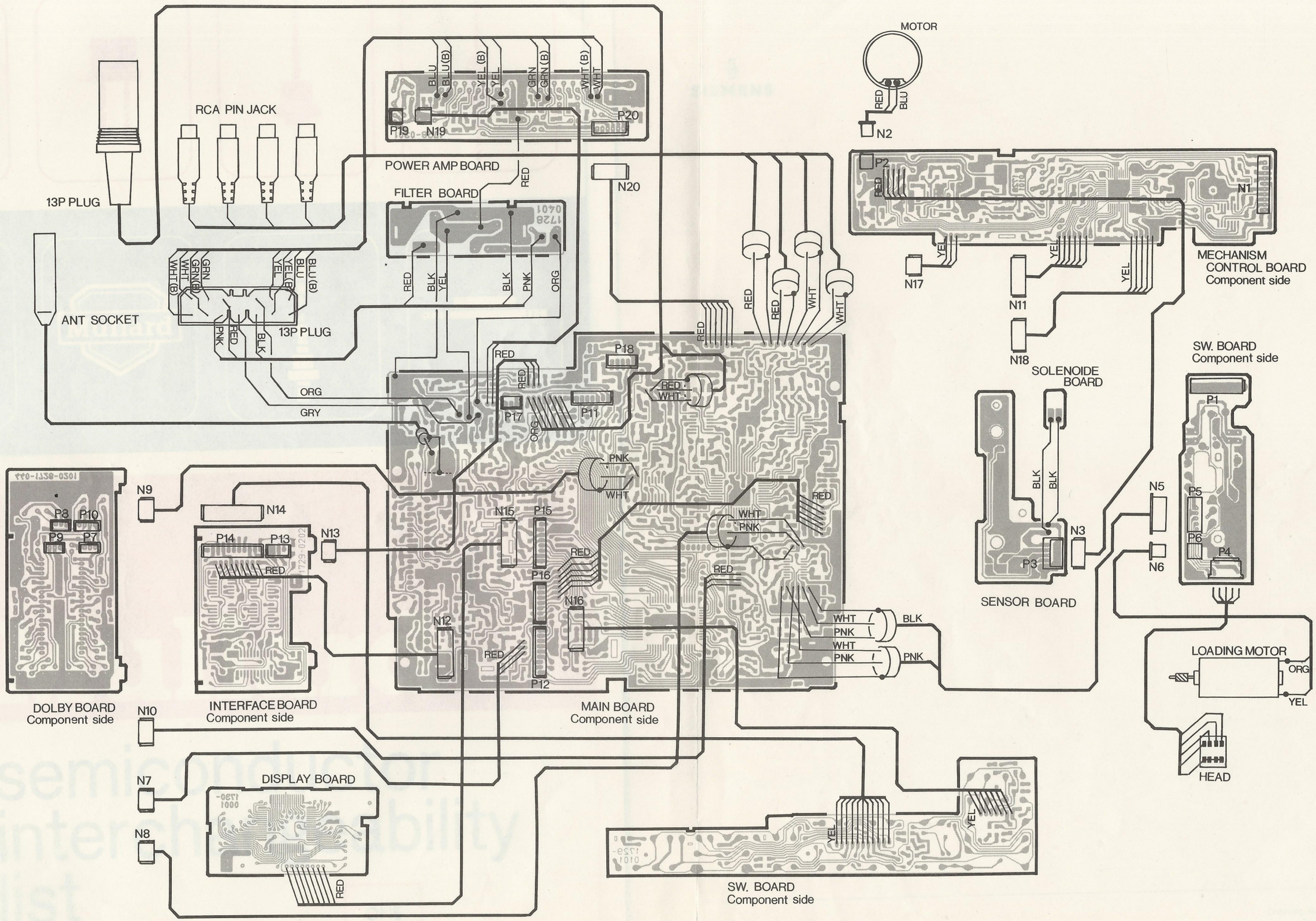

TO ENTER CODE. PRESS CODE N° VIA P/S BUTTONS
THEN PRESS SLCT – THEN RADIO

NO AUDIO – NO SEEK STOP! – CHECK D70 (AMP PCB)
for s/c [9.1V ZENNER] supplies 8V to Tuner ~~Assy~~

NO GO / TURN ON – CHECK V60 for s/c.
"280V"
NO GO – NO TURNON – CHECK 0.47uf 5.5V cap for leaks + corroded trax.