Clock radio 90RS250/45

Service
Service
Service

Service Manual

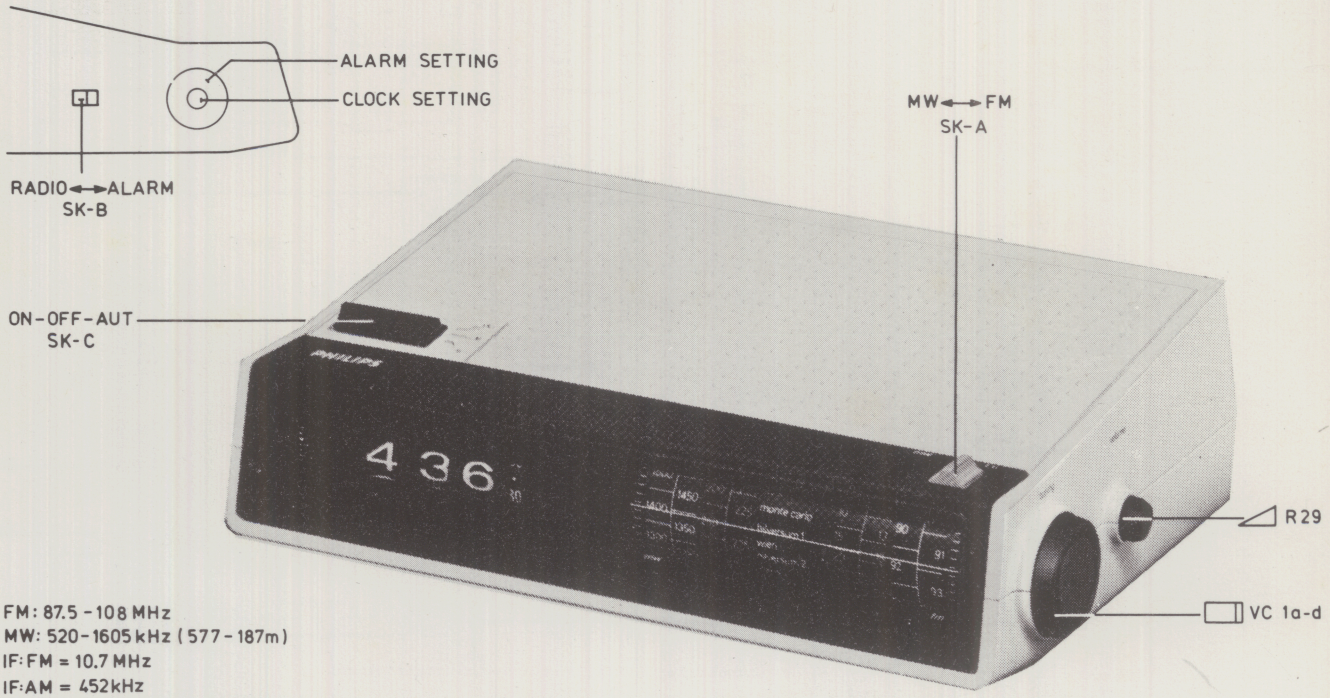

FM: 87.5 - 108 MHz
MW: 520 - 1605 kHz (577 - 187m)
IF: FM = 10.7 MHz
IF: AM = 452 kHz
MAINS SUPPLY: 240V~ 50 Hz
OUTPUT: 450 mW - 8Ω d=10%

PHILIPS

PHILIPS

Clock radio 90RS250/45

Service
Service
Service

Service Manual

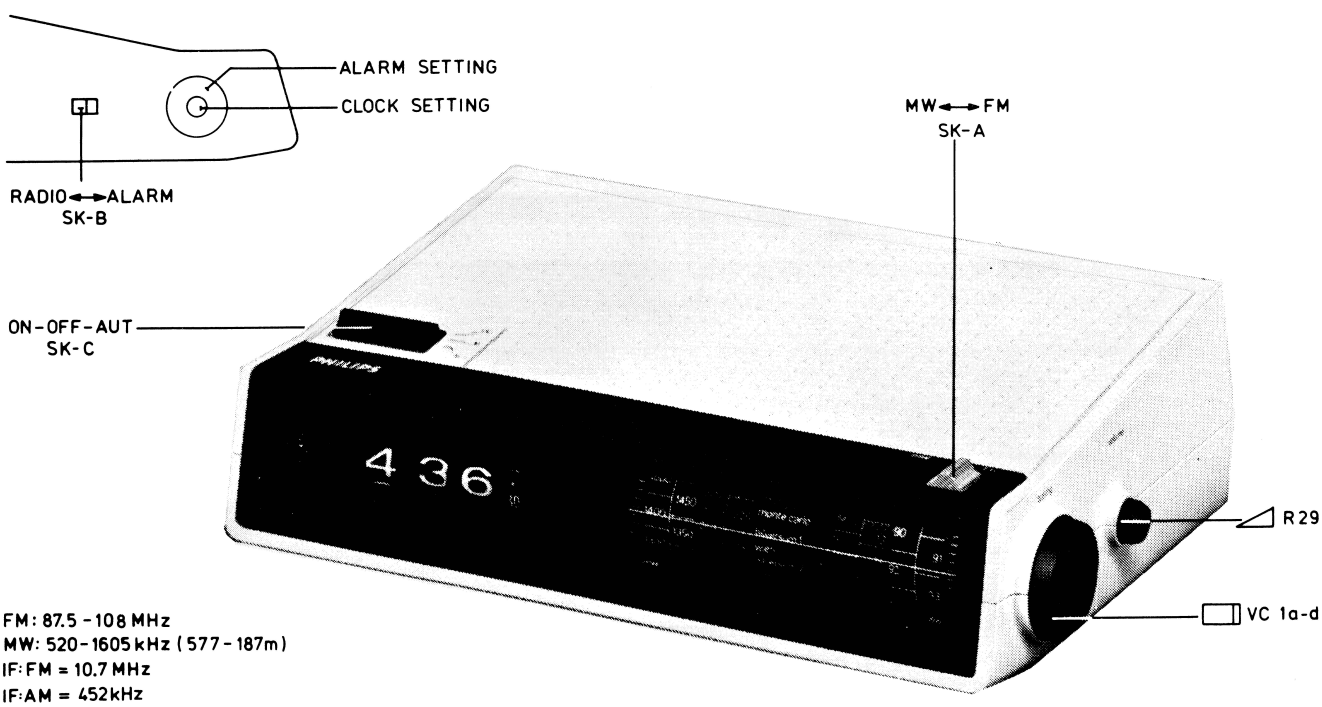

FM: 87.5 - 108 MHz
MW: 520 - 1605 kHz (577 - 187m)
IF: FM = 10.7 MHz
IF: AM = 452 kHz
MAINS SUPPLY: 240V~ 50 Hz
OUTPUT: 450 mW - 8Ω d=10%

PHILIPS

Wave range	Signal to →	◇	Var.cap.	Adjust	Indication
MW (520-1605 kHz)	452 kHz via 20 nF	A	Min.cap.	S7	↕
				S14	
				S15	
	512 kHz	B	Max.cap.	S6	↕ ◇1 max.
	1635 kHz		Min.cap.	CT4	
	580 kHz		Tune in	S5a,b	
	1400 kHz			CT3	
FM (87,5-108 MHz)	10,7 MHz	C	Min.cap.	S8	↕
				S9	◇1 max.
				S10	
				S11	
				S12	
				S13	◇1 min.
	86,5 MHz	D	Max.cap.	S4	↕
	109 MHz		Min.cap.	CT2	◇1 max.
	90 MHz		Tune in	S2	
	106 MHz			CT1	
↕ Repeat					

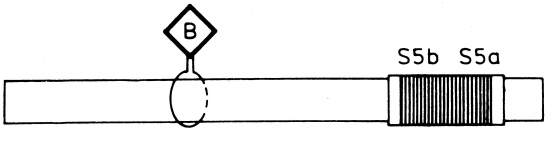

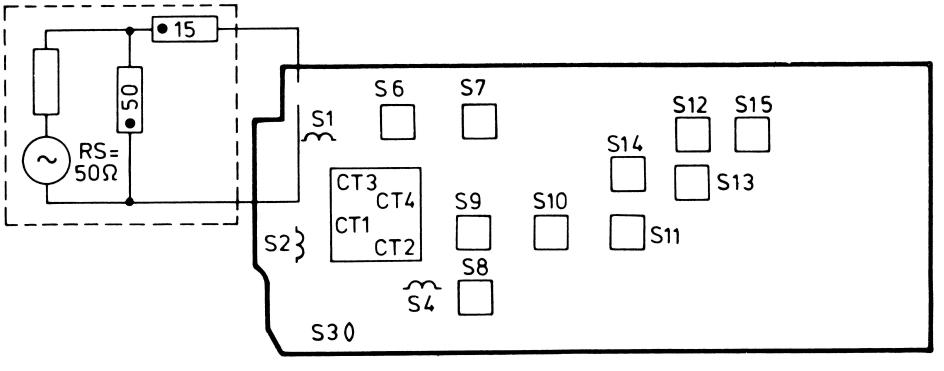

7860A

CS54699

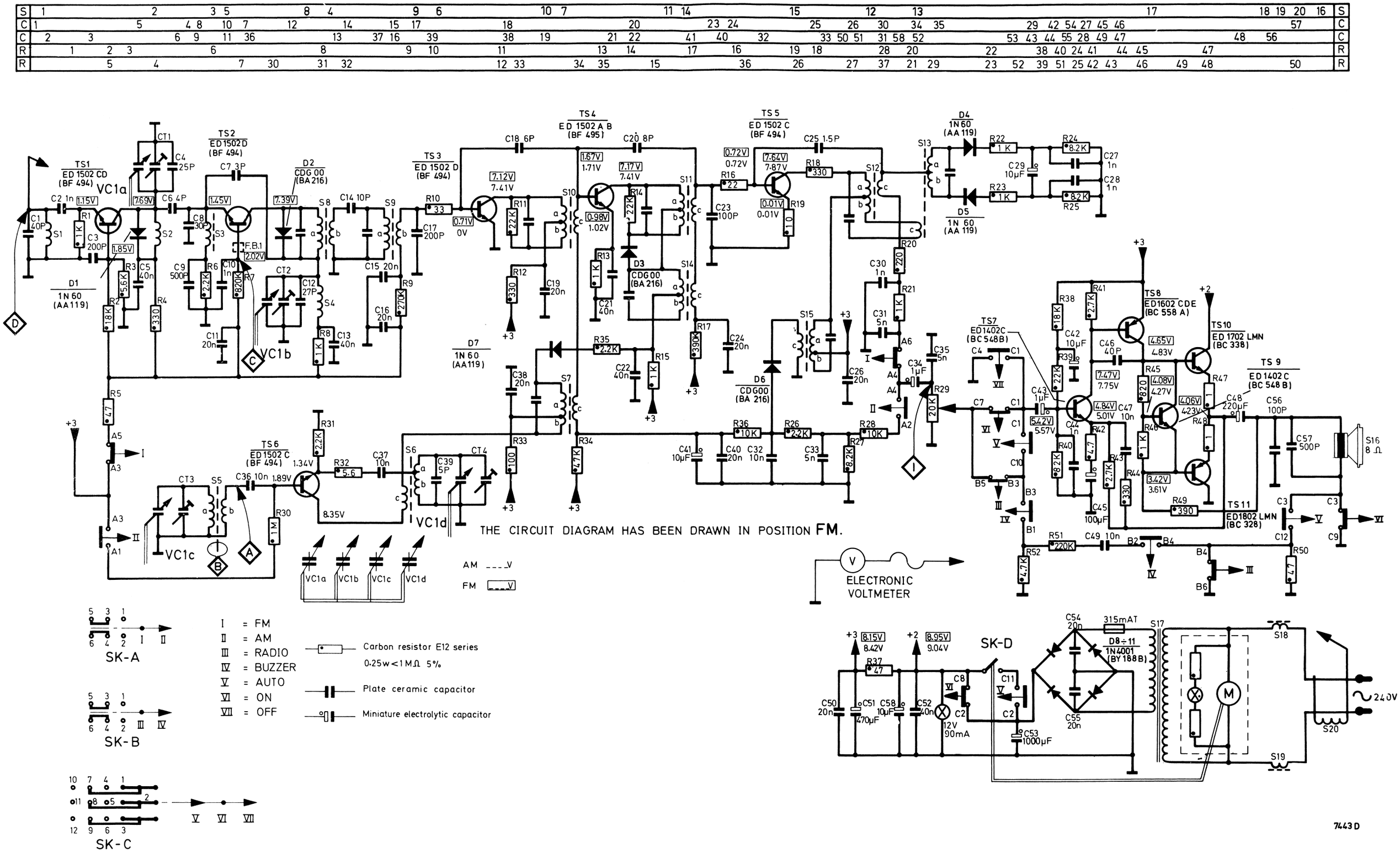
TS1 ED 1502 CD (BF 494)
TS2 ED1502D (BF 494)
TS3 ED 1502 D (BF 494)
TS4 ED 1502 A B (BF 495)
TS5 ED 1502 C (BF 494)
TS6 ED 1502 C (BF 494)
TS7 ED1402C (BC 548B)
TS8 ED1602 CDE (BC 558 A)
TS9 ED 1402 C (BC 548 B)
TS10 ED 1702 LMN (BC 338)
TS11 ED1802 LMN (BC 328)
D1 1N 60 (AA119)
D2 CDG 00 (BA 216)
D3 CDG00 (BA 216)
D4 1N 60 (AA 119)
D5 1N 60 (AA 119)
D6 CDG00 (BA 216)
D7 1N 60 (AA119)
D8÷11 1N4001 (BY 188B)
VC1a
VC1b
VC1c
VC1d
THE CIRCUIT DIAGRAM HAS BEEN DRAWN IN POSITION FM.
AM
FM
ELECTRONIC VOLTMETER
SK-A
SK-B
SK-C
SK-D
I = FM
II = AM
III = RADIO
IV = BUZZER
V = AUTO
VI = ON
VII = OFF
Carbon resistor E12 series 0.25w<1MΩ 5%
Plate ceramic capacitor
Miniature electrolytic capacitor
S16 8 Ω
240V
7443 D

CS54700

S	2 1 3 5a 6 4 5b 7 9 8 10 14 11 12 13 15 17 16 18 19 20
C	3 2 1 9 39 37 7 12 36 41 38 40 22 49 24 31 23 43 42 45 26 32 51 47 58 53 54 56 57
C	11 5 6 4 8 13 10 16 14 17 15 18 21 19 20 44 25 50 27 35 29 30 28 34 33 46 52 48 55
R	2 1 50 32 31 30 33 34 52 51 35 14 40 24 22 39 36 38 25 42 43 44 45 37
R	3 4 6 7 8 9 10 5 13 11 12 15 17 19 16 21 18 20 29 23 26 27 41 28 49 46 47 48

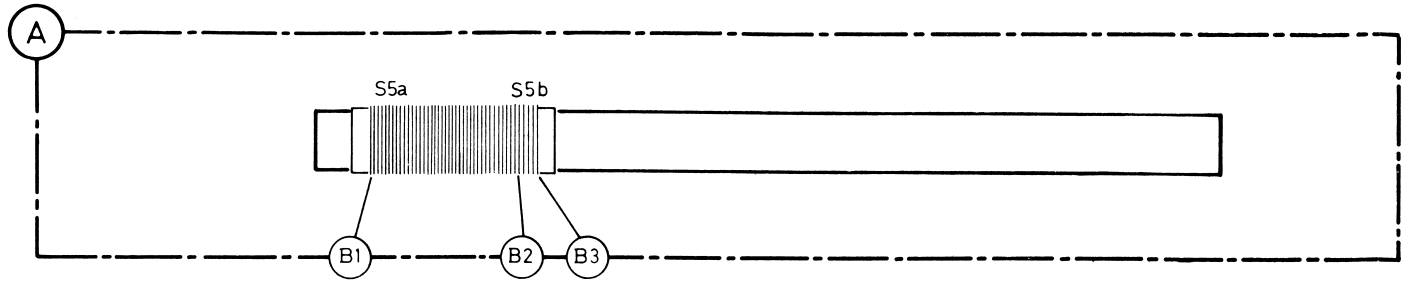

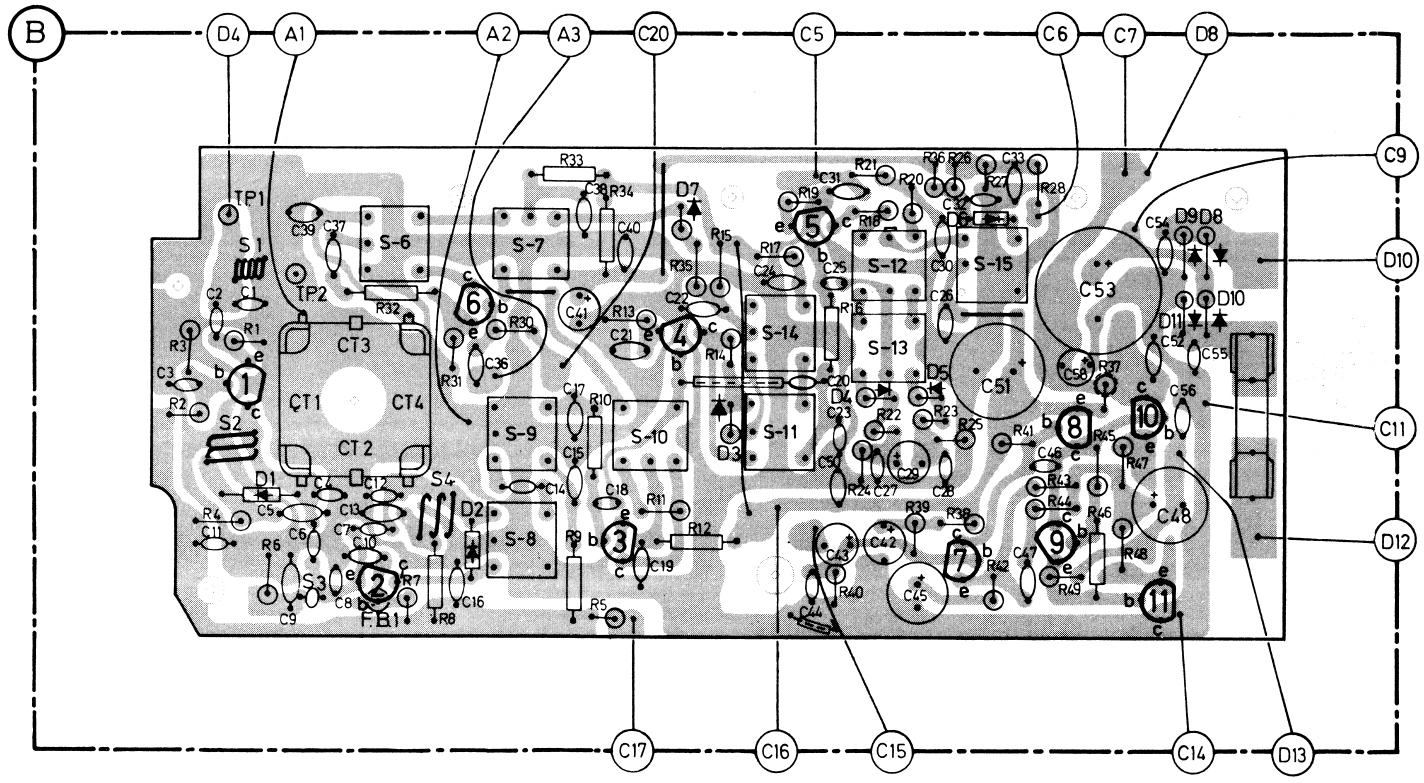

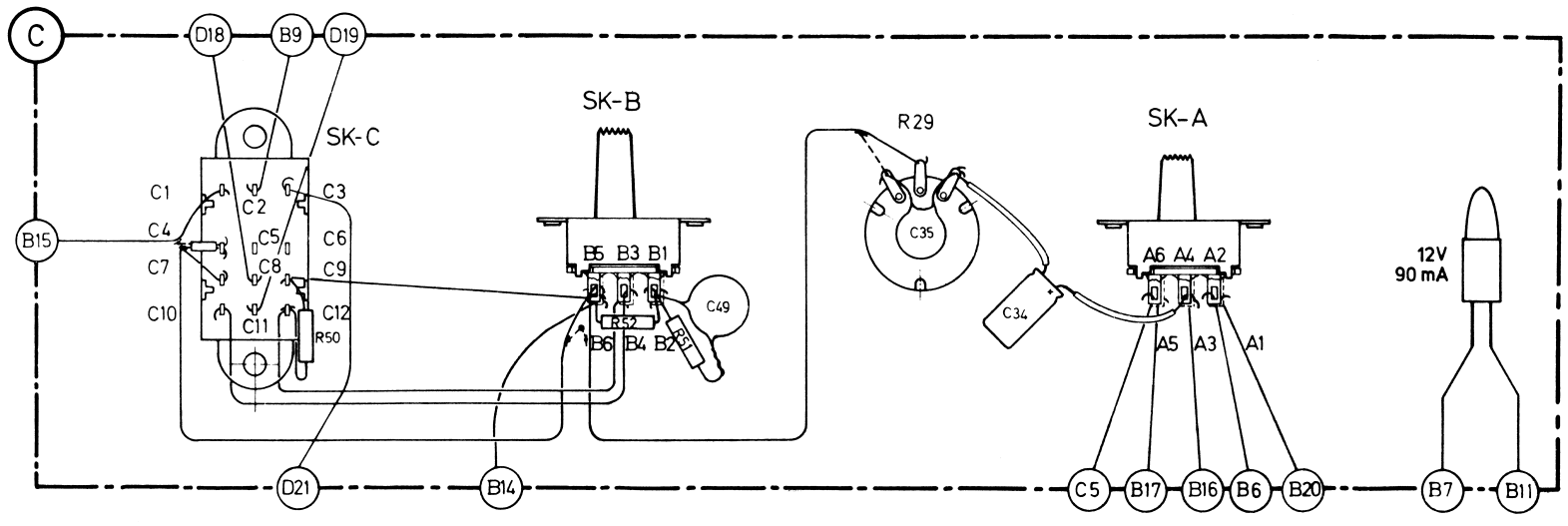

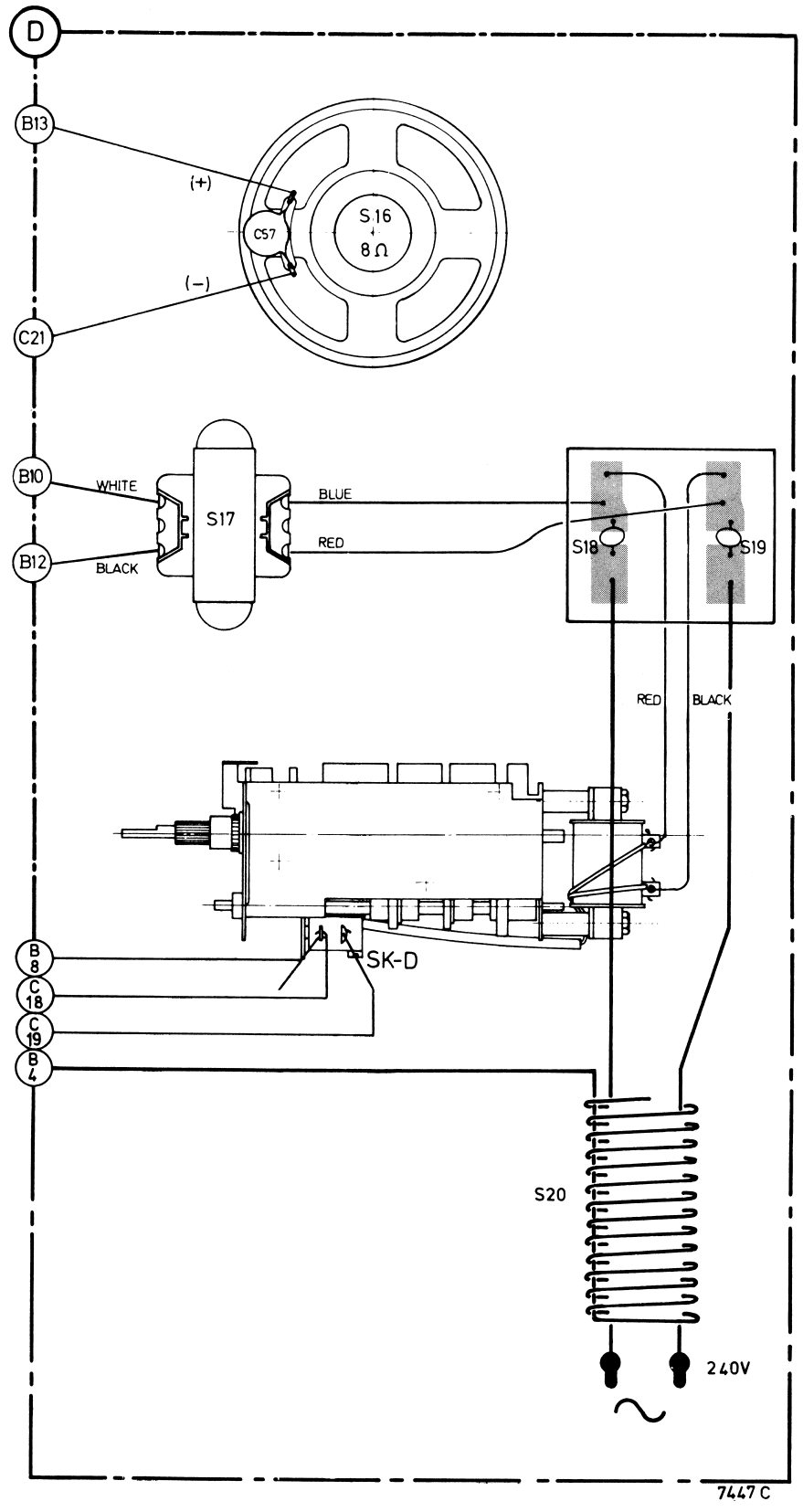

CS54702

| | | |

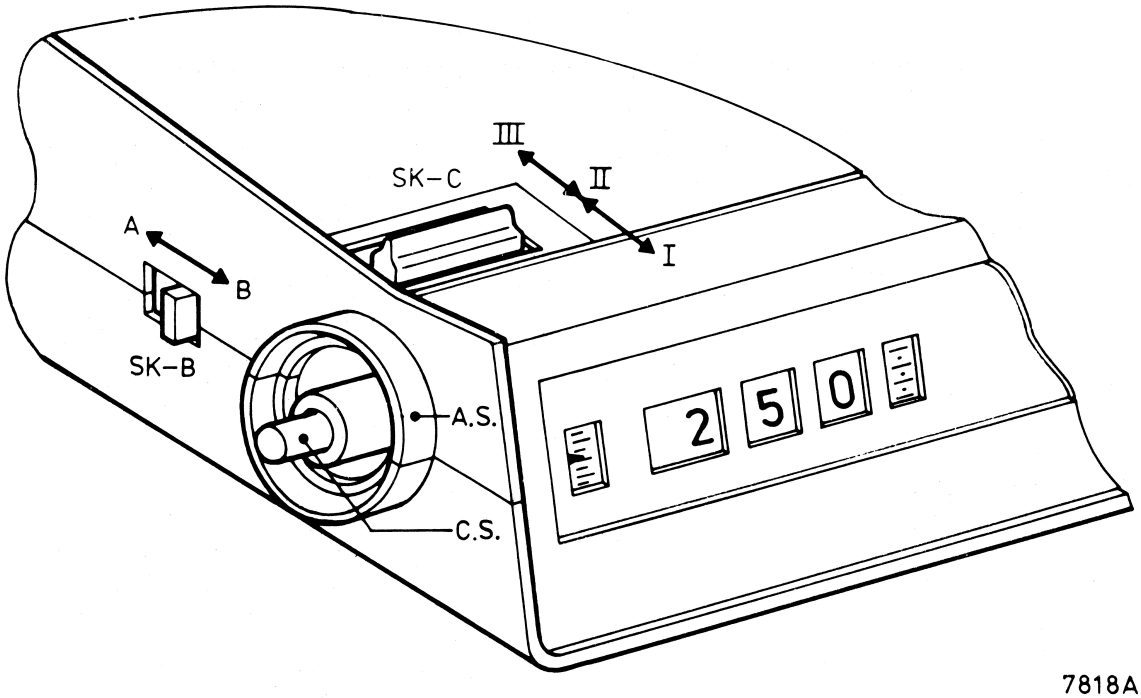

Fig. 1

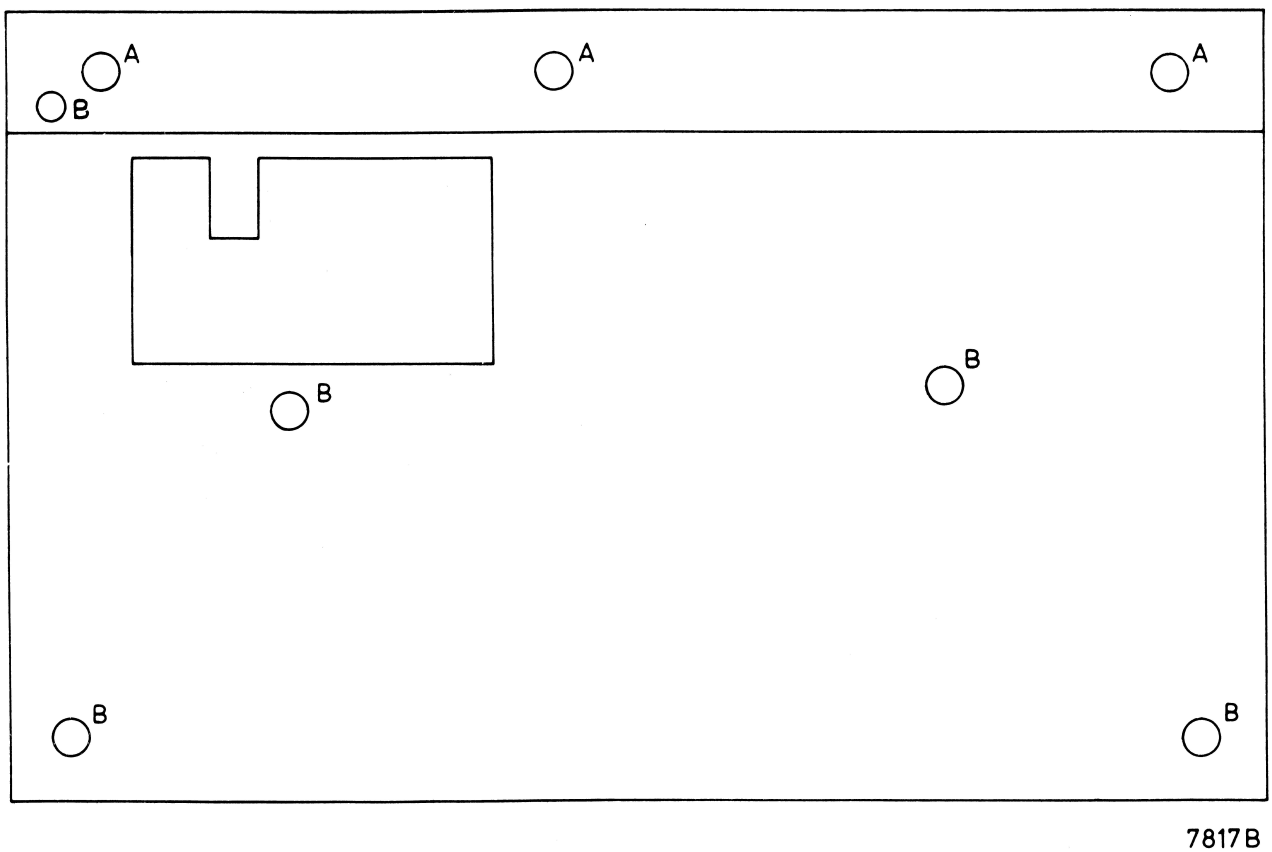

Remove Front : A
Remove Cabinet: A⟶ B

CS54704

LIST OF ELECTRICAL PARTS

-TS-		
TS1,2,3,5,6	BF494	5322 130 44195
TS4	BF495	4822 130 40947
TS7,9	BC548B	4822 130 40937
TS8	BC558A	4822 130 40962
TS10,11	BC328/338 (pair)	4822 130 40942

-D-		
D1,4,5,7	AA119	5322 130 40229
D2,3,6	BA216	5322 130 30702
D8,9,10,11	BY188B	4822 130 30829

-S-		
S8,9	FM-IFT I (orange)	4822 153 50197
S10,11	FM-IFT II III (green)	4822 153 50198
S12	FM-DET I (pink)	4822 153 10237
S13	FM-DET II (blue)	4822 156 30442
S7,14	AM-IFT I II (white)	4822 156 30407
S15	AM-DET (black)	4822 153 10232
S6	MW-Osc. coil (red)	4822 156 30525
S3,18,19	FM-IF Trap coil	4822 157 50791
S5	MW-Ant. coil	4822 158 60396

-C-		
C7	Cer.cap. 3 pF±0.25 pF	4822 122 31223
C6	Cer.cap. 4 pF±0.25 pF	4822 122 31043
C39	Cer.cap. 5 pF±0.25 pF	4822 122 34033
C18	Cer.cap. 6 pF±0.25 pF	4822 122 31224
C8	Cer.cap. 30 pF± 5 %	4822 122 40099
C32,36,37, 47,49	Cer.cap. 10 KpF±20%	4822 122 30043
C11,15,16,19, 24,26,38,40, 50,54,55	Cer.cap. 20 KpF±20%	4822 122 30103
C5,13,21, 22,52	Cer.cap. 40 KpF±20%	4822 122 31152
VC-1	Varco	4822 125 20189

-Miscellaneous-		
	Ferrite bar	4822 526 10105
S16	Loudspeaker	4822 240 30106
S17	Power transformer	4822 145 20152
R29	Volume control	4822 101 30318
	Fuse 315 mA.T.	4822 253 30014

When the power cord plugs fits into the wall socket, the clock is running (see Fig. 1)

C.S. *Clock setting*
Knob to set the clock. When the second hand is between 55 and 05, the clock setting is blocked.

A.S. *Alarm setting*
Knob to predetermine the wake-up time

SK-C I Radio and alarm switched off
II Radio switched on
III Wake-up unit. Depending on SK-B, either the radio is turned or the wake-up signal sounds out. After one hour the radio is turned off or signal stops.

SK-B Selector switch for wake-up unit
a. Wake-up signal
b. Radio

Safety regulations require that the set be restored to its original condition and that parts which are identical with those specified, be used.

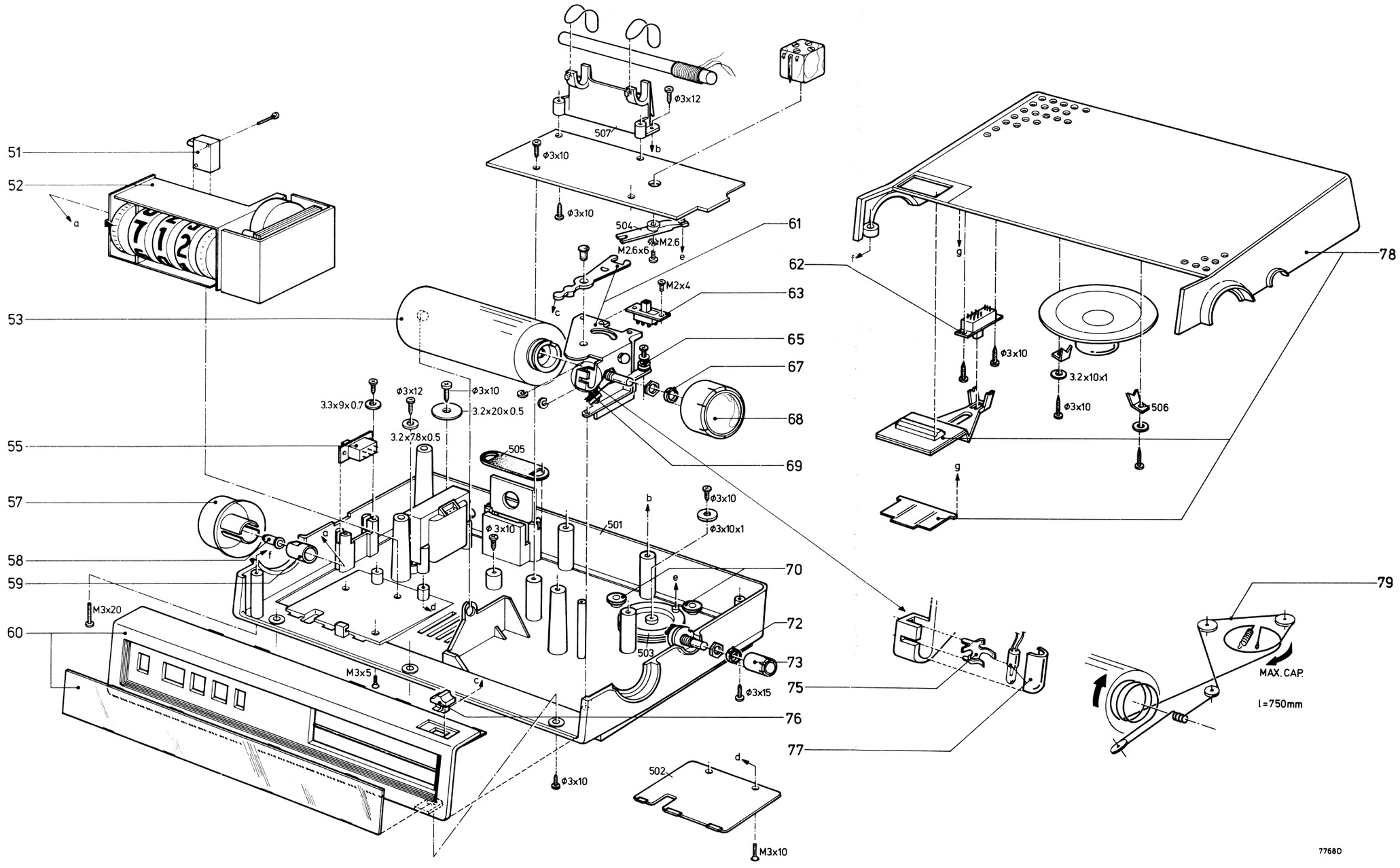

LIST OF MECHANICAL PARTS

51	5322 271 30093	63	4822 277 20177	77	4822 134 90005
52	4822 349 40038	65	4822 528 80618	78	4822 420 30213
53	4822 332 10011	67	4822 492 61974	79	4822 321 30214
55	4822 277 20199	68	4822 413 10117		
57	4822 413 10119	69	4822 528 80602		
58	4822 413 10118	70	4822 528 80652		
59	4822 413 30632	72	4822 492 61974		
60	4822 423 50255	73	4822 413 30631		
61	4822 404 20203	75	4822 404 20202		
62	4822 277 20201	76	4822 411 60466		

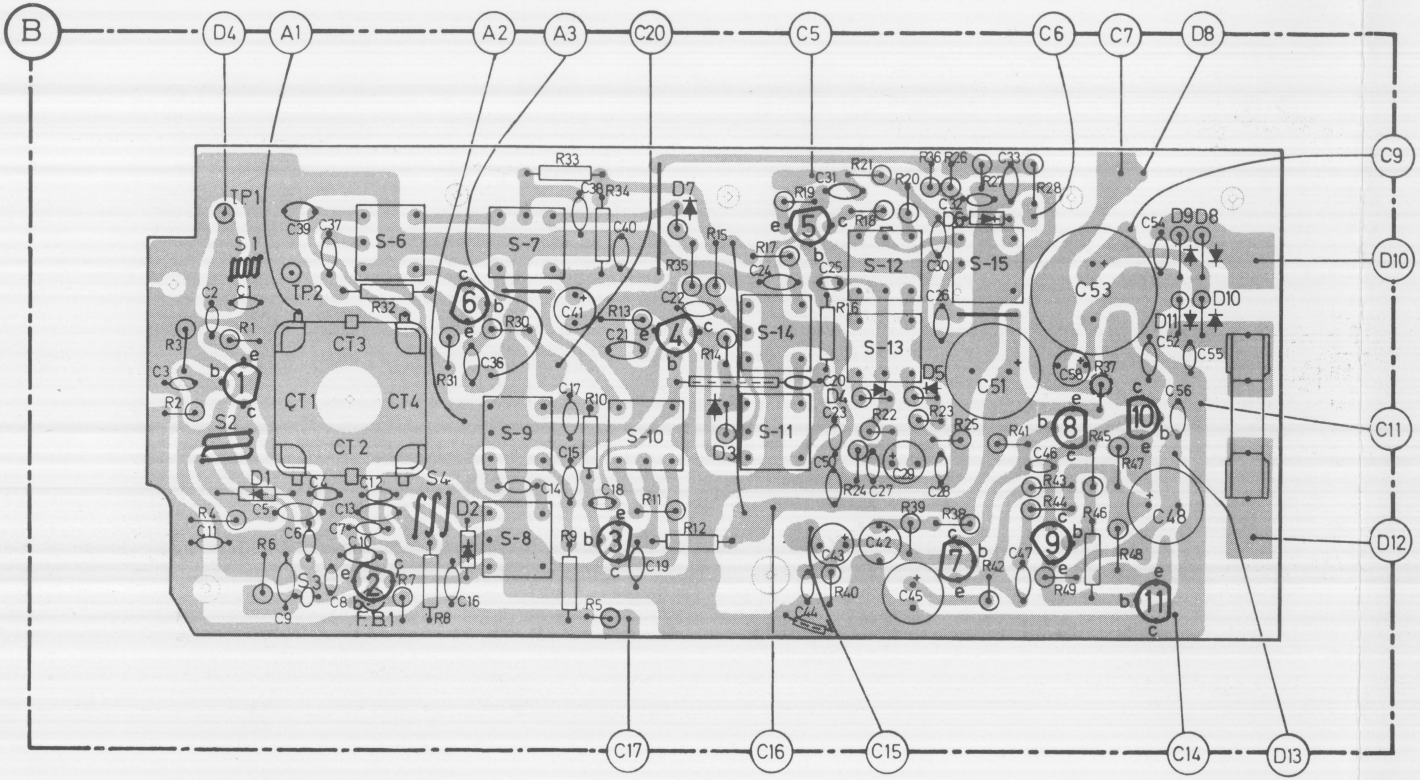
B
D4
A1
A2
A3
C20
C5
C6
C7
D8
C9
D10
C11
D12
D13
C14
C15
C16
C17
TP1
TP2
S1
S2
S3
S4
S-6
S-7
S-8
S-9
S-10
S-11
S-12
S-13
S-14
S-15
CT1
CT2
CT3
CT4
C51
C53
C48
F.B.1
D1
D2
D3
D4
D5
D6
D7
D8
D9
D10
D11
1
2
3
4
5
6
7
8
9
10
11

| | | |