Service
Service
Service

Service Manual

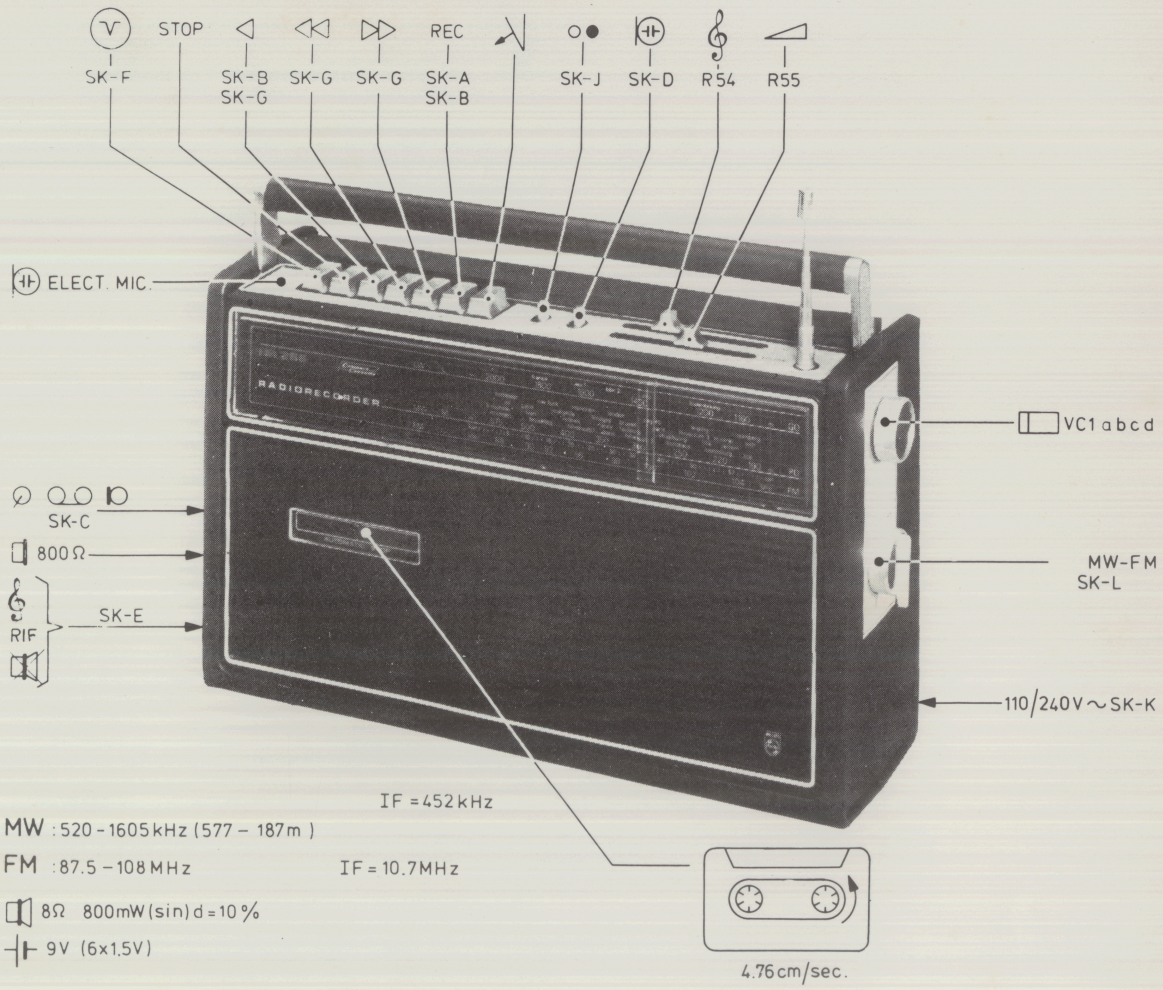

MW : 520 - 1605 kHz (577 – 187 m)

FM : 87.5 – 108 MHz

8Ω 800 mW (sin) d = 10 %

9V (6x1.5V)

Subject to modification

PHILIPS

Service
Service
Service

Service Manual

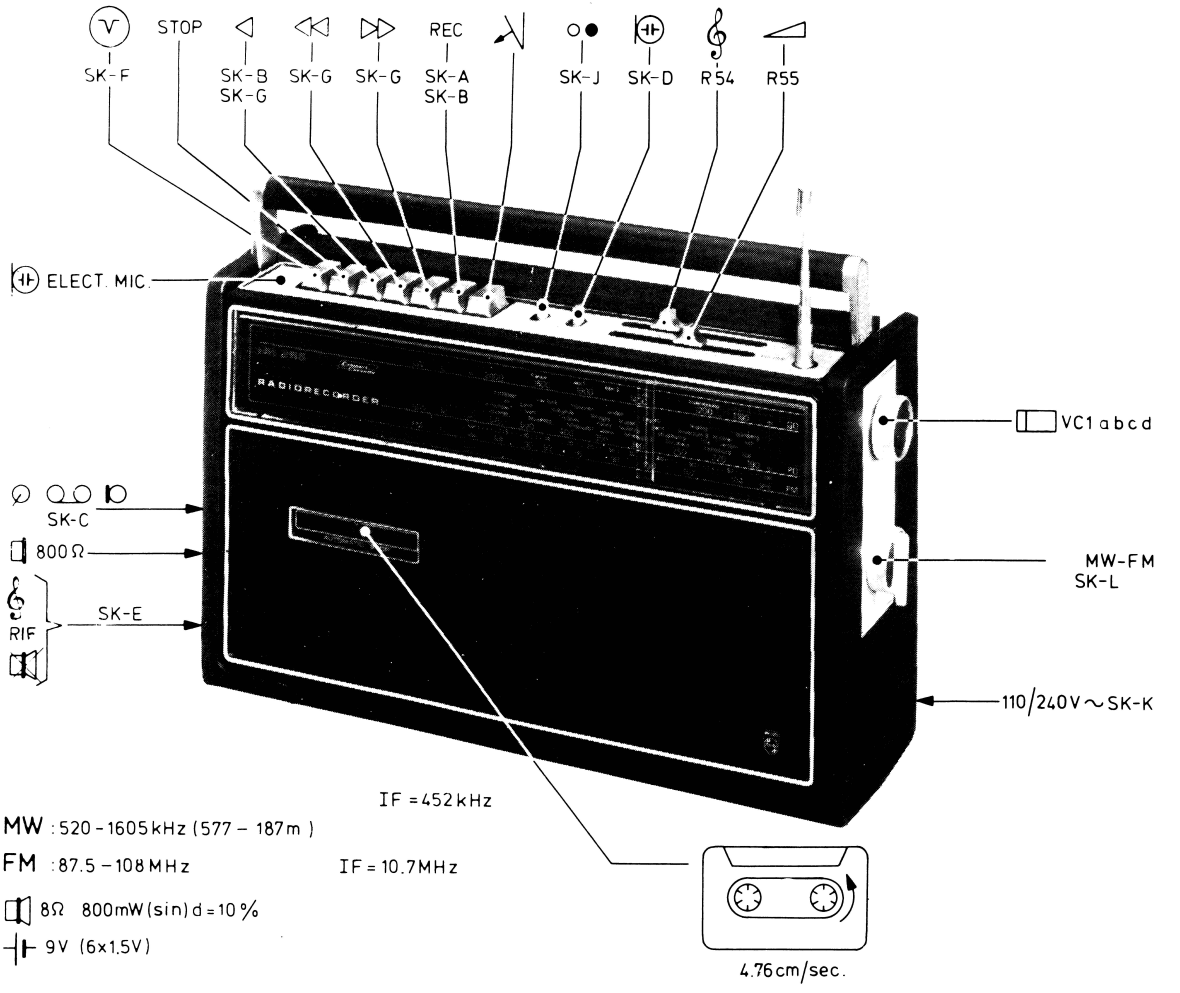

MW : 520 - 1605 kHz (577 – 187 m)
FM : 87.5 – 108 MHz
8Ω 800 mW (sin) d = 10 %
9V (6x1.5V)

Subject to modification

PHILIPS

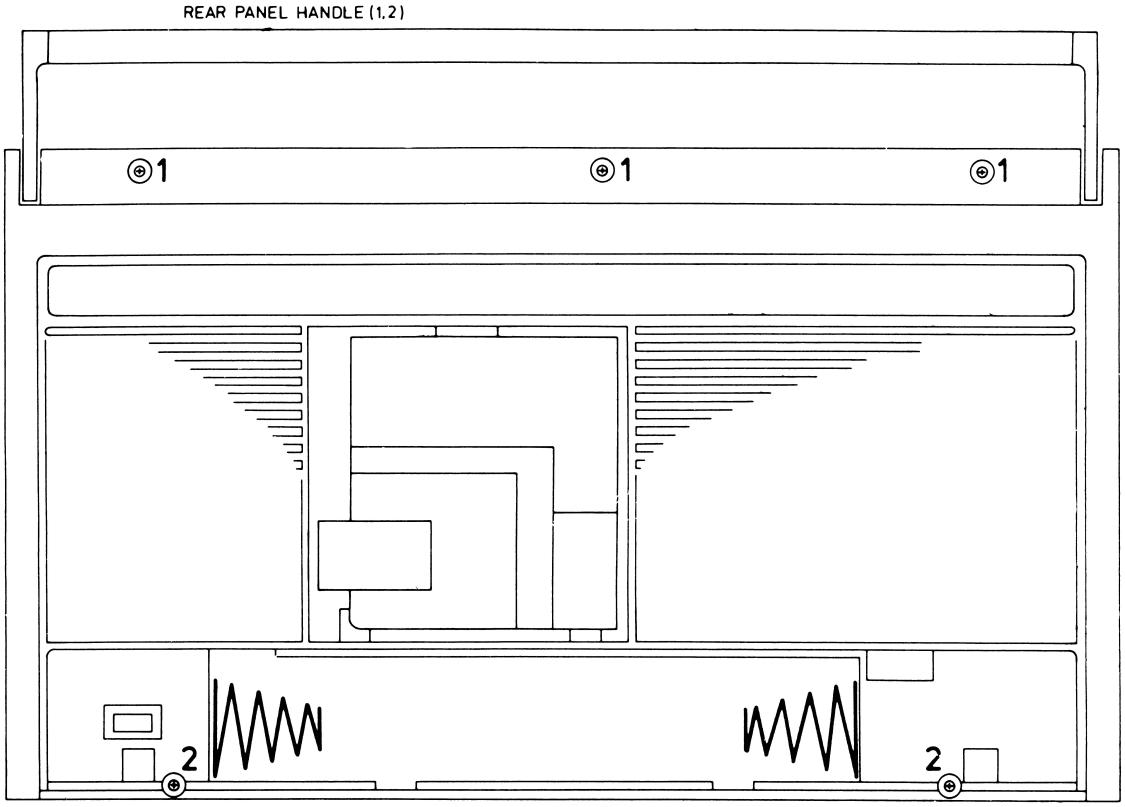

5099B

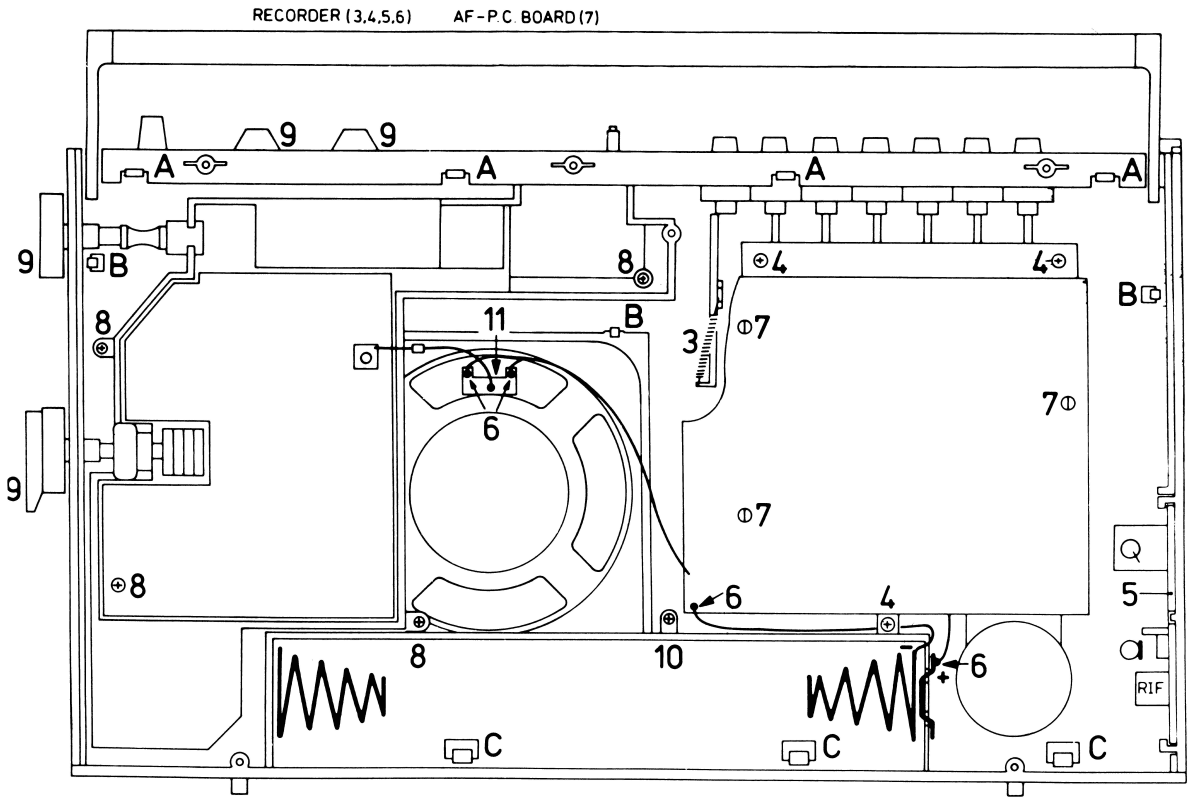

5100B

Fig. B

| | | |

L.S	S12 S11,10 L1 L2 L3 S8,9 S14,7 L4 S5,6 B1 S13 S14 S16 S15 S17
C	33 40.41 39 36 1 34.2.3.4.42.6.10.45.7.8 5 101.44.13 9 11 14.15.12 95 51 96 52 55 56.79 78.81.87.50 88 59.57 54 58 91 58 56.63.67.66.64 68 86
C	38 30.29 32 23.31.27 24.25.30 49 26.19÷22 16.17 37 28 90 94.66 93 91 34 85 82.83 62 80 88 75.74 76.53 77 97÷101 60 70.69 49 72 73 71
R	28 31 34 32 26 2.3 1.36.35 4 6.5 7÷9 40 43 44 84.29.81.48.45.51.83.49.77.48.78.41.75.42 101 52.47 39 59 57 58.62.61.68.63.67 64
R	25 29 33 30 24 27 23 22 20 19 18 17 15 37 12 16 13 14 10 11 21 97÷100 54 89 95 96 90÷93.102.103.86.80.97.88.75.87.86.55 74 50 53.73.56.65.72 71.66 70.69
MISC	D6 D7.8 TS5 SK-L D5 TS1.6 D1.4 TS2.4 D3.2 TS3 SK-J TS22.21 D17÷20 SK-D D13.14 TS7 D11.15.16 D12 TS20 TS16.15.18 SK-B TS19.8 D21÷24 SK-A TS9.17.10 D9 TS11.12 D10 VL1 TS13.14 SK-K K1,2 M SK-C,E,F,G,H

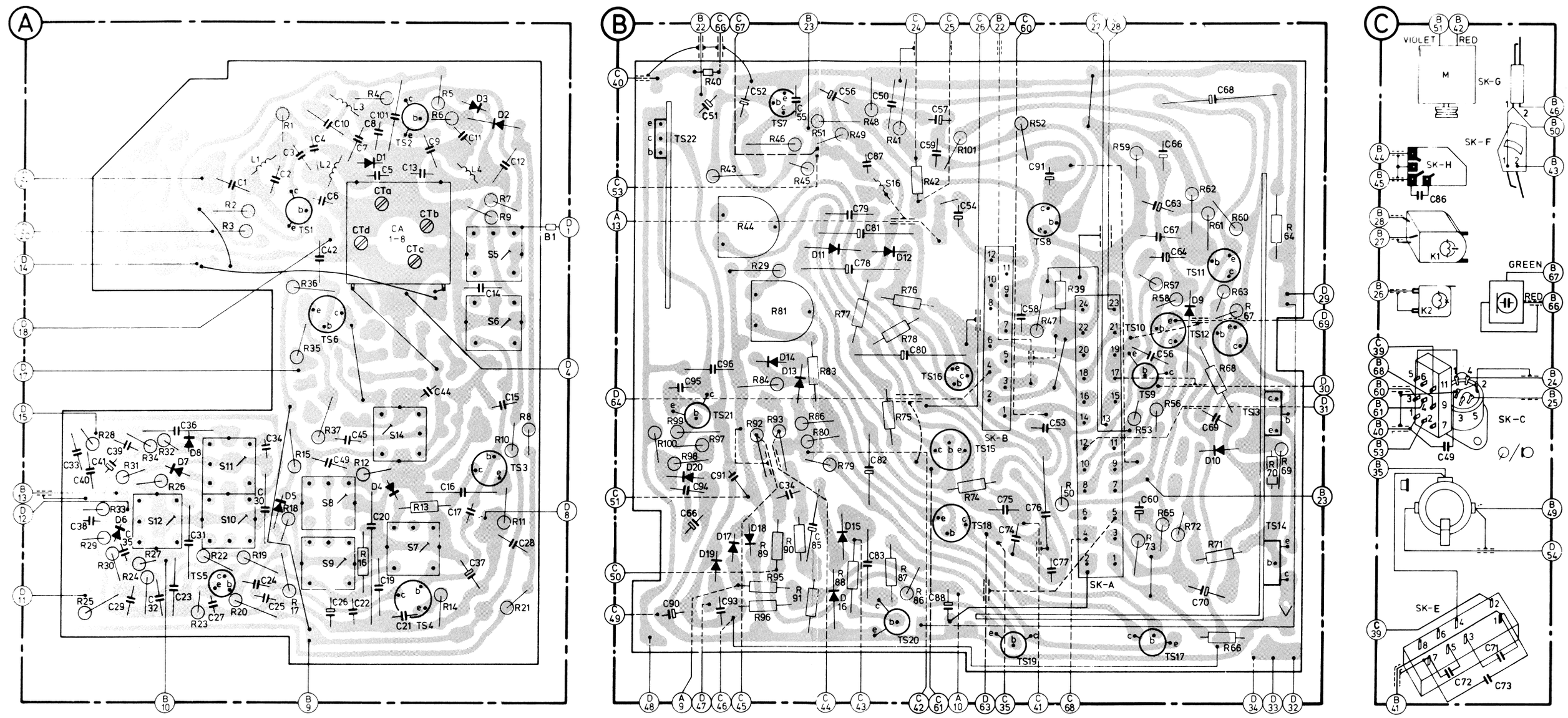

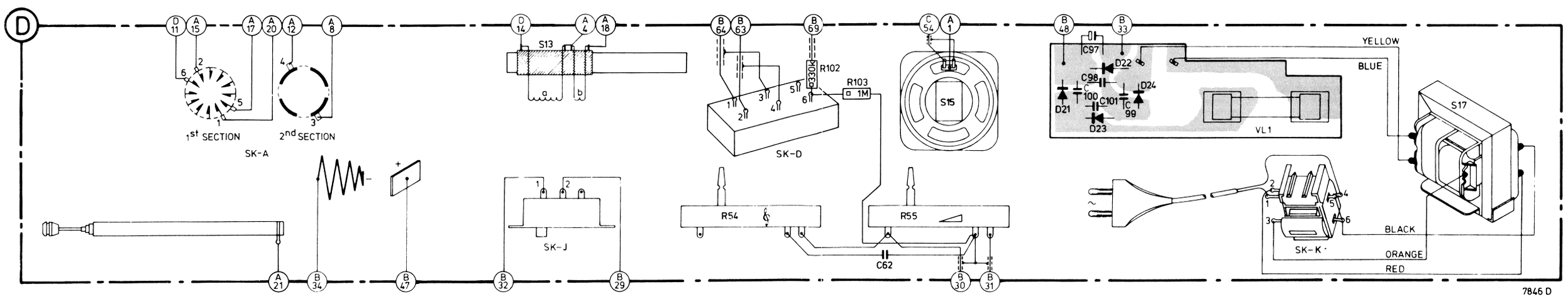

CS 54434

L.S	S12 S11,10 L1 L2 L3 S8,9 S14,7 L4 S5,6 B1 S13 S14 S16 S15 S17
C	33 40.41 39 36 1 34.2.3.4.42.6.10.45.7.8 5 101.44.13. 9 11 14.15.12 95 51 96 52 55 56.79 78.81.87.50 88 59.57 54 58 91 58 56.63.67.66.64 68 86
C	38 30.29. 32. 23.31.27 24.25.30 49.26.19÷22 16.17 37 28 90 94.66 93 91 34 85 82.83 62 80 88 75.74 76.53 77 97÷101 60 70.69 49 72 73 71
R	28 31 34 32 26 2.3 1.36.35 4 6.5 7÷9 40 43 44 84.29.81.48.45.51.83.49.77.48.78.41.75.42 101 52.47 39 59 57 58.62.61.68.63.67 64
R	25 29 33 30 24 27 23 22 20 19 18 17 15 37 12 16 13 14 10 11 21 97÷100 54 89 95 96 90÷93.102.103.86.80.97.88.75.87.86.55 74 50 53.73.56.65.72 71.66 70.69
MISC	D6 D7.8 TS5 SK-L D5 TS1.6 D1.4 TS2.4 D3.2 TS3 SK-J TS22,21 D17÷20 SK-D D13.14 TS7 D11.15.16 D12 TS20 TS16.15.18 SK-B TS19.8 D21÷24 SK-A TS9.17.10 D9 TS11,12 D10 VL1 TS13.14 SK-K K1,2 M SK-C,E,F,G,H

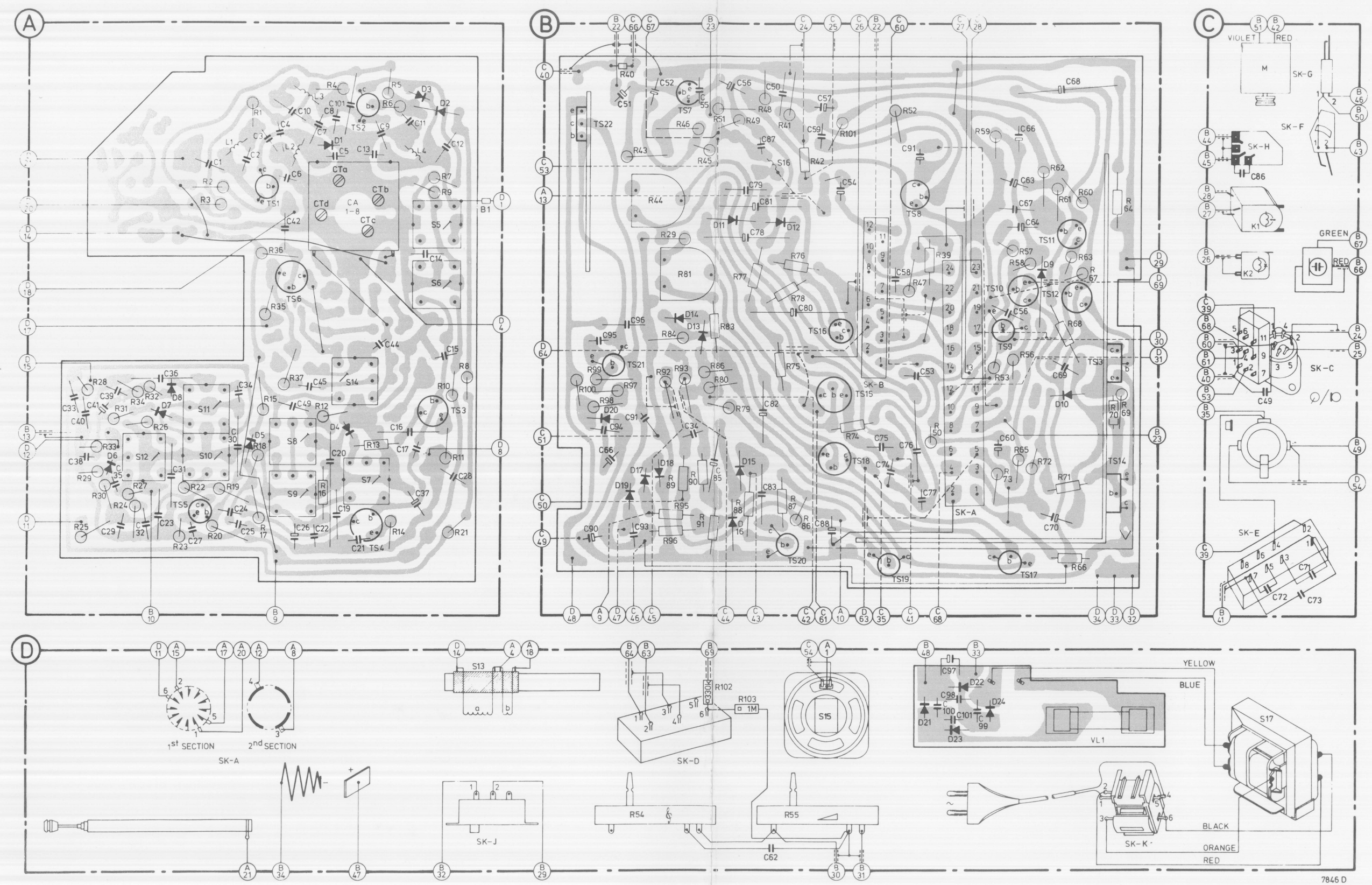

CS 54434

. S	S16	S5,6 L4	S7,14 L3 ? S8,9 L1	S11,10	S12
C	68 67.56.66.64.63 91 58 54.57.59 80 50 87.79.81.78 56 55 52 96.51.95	12 15 14 11 14 9 13	101 5 8 7 10 6 42 4 3 2 1	36 39 41	40 33
C	69.70 60 97÷101.77.53.76.74.75 88 83.82 85 34 91.92 94.66 98	28 37 23 16	19÷22 43 18 26 34.32.25.24	27 31 23 32 35 29	38
R	64 67.60÷63.68 58.57 59 39 47 54.52 101 42 41.75÷78.46.49.51.83.45.48.81.29.84.44 43	7÷10 5.6	4 35.36 1 2.3	32 34.31	28
R	69.70 66.71 72.65.56.73.53 50 74 86÷88 79 80.86 90÷93.89.95.96 97÷100	11 21 14 13	16 12 37.17.15.18 19 20.22.23	26 17 24	30.33 29 25
MISC	TS13.14 VL1 D10.9 TS9÷12.17 D21÷24 SK-A TS8 TS19 SK-B TS18.15.16 TS20 D12 D15.16.11 D13.14 TS7 D17÷20 TS22	TS3 D2.3 TS4.2	D4.1 TS6.1 D5	TS5 D8.7	D6

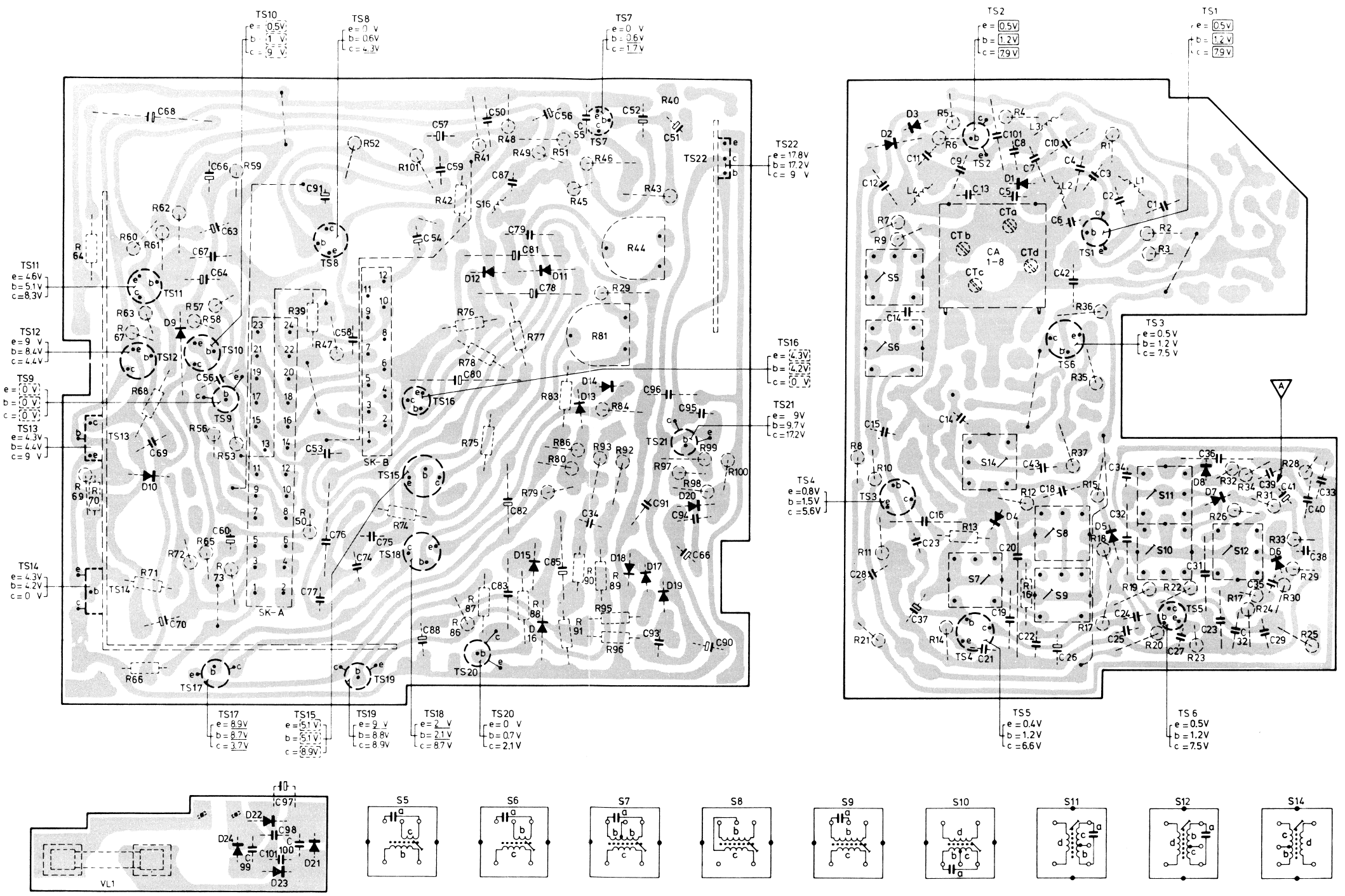

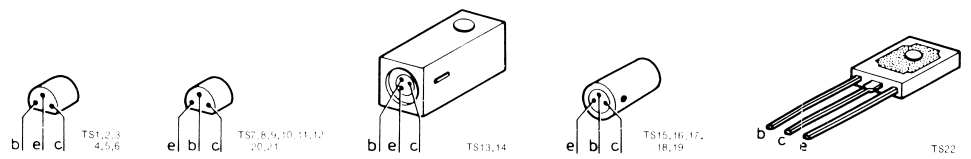

REPAIR HINTS

Removing the radio section, Fig. B

- Remove the screws 8 and the knobs 9
- Set the pointer under the on/off and electret switch. Disconnect the pointer from the drive belt.
- Draw the upper segment of the telescopic aerial about 5 cm out.
- Unsolder wire 11.
- Lift the radio section somewhat at the side under which the transformer is located and take the radio section about 5 cm out of the cabinet.
- Slide the upper segment of the aerial into the cabinet and take the radio section out of the cabinet.
- After reassembling, seal the pointer with lacquer.

| | | |

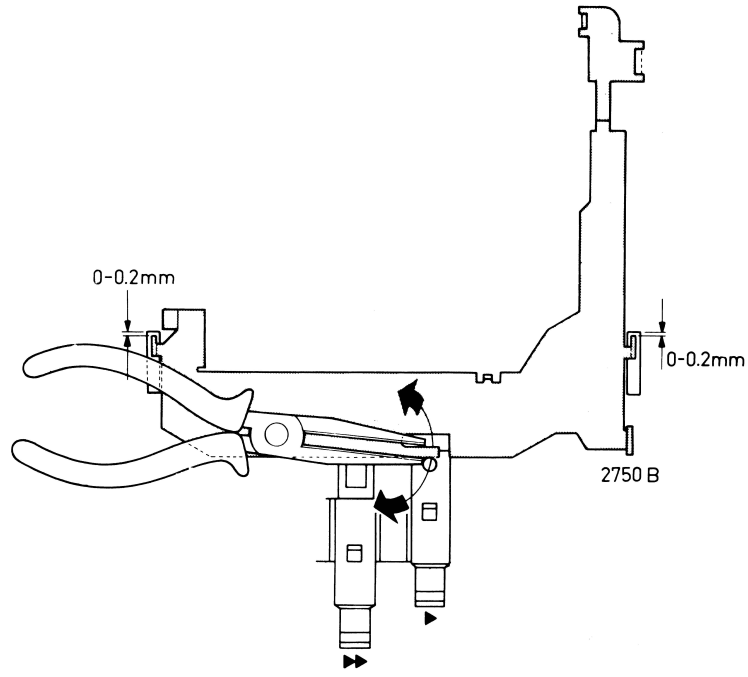

Fig. 2

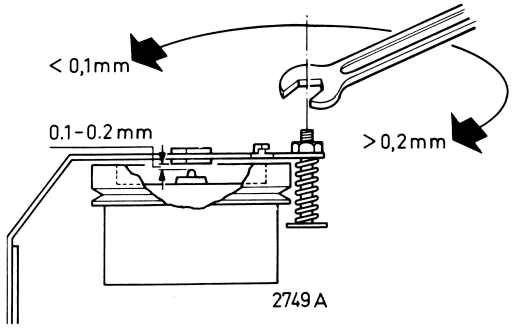

Fig. 3

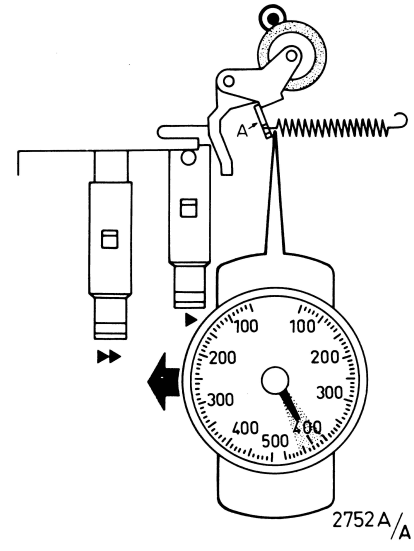

Fig. 4

4211A

Fig. 5

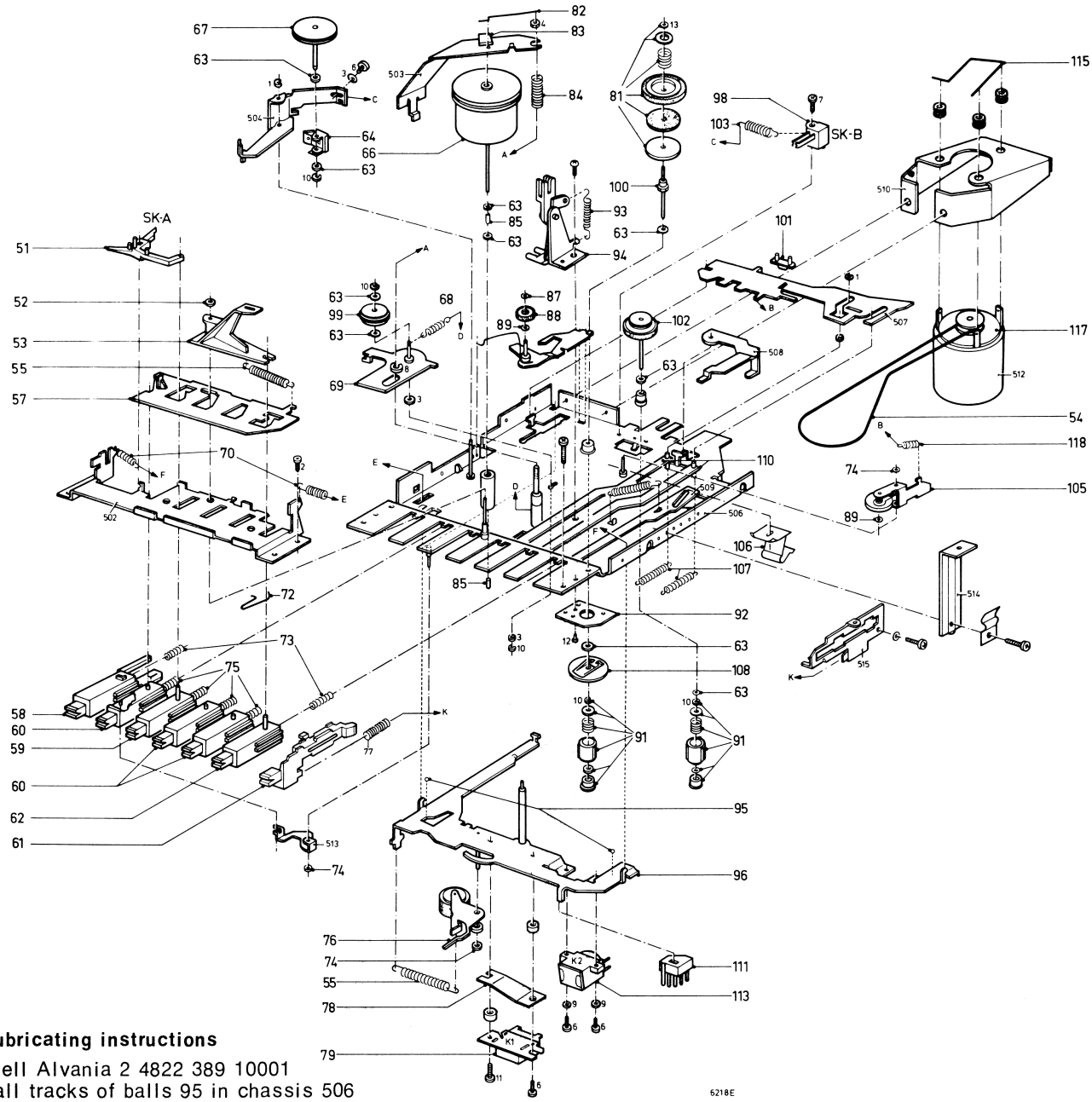

Lubricating instructions

Shell Alvania 2 4822 389 10001
Ball tracks of balls 95 in chassis 506

Lubricant 10 (4822 390 10003)
Contact faces of brackets 110, 111 and 507

All purpose oil 4822 390 10048
Shaft of flywheel 66
Shafts 100 and 102 of turntables
Shaft of idler wheel 99

Fig. 1

1	4822 530 70122	55	4822 492 31095	75	4822 492 51028	98	4822 403 30219
2	5322 502 84005	57	4822 403 50753	76	4822 403 40056	99	4822 528 70194
3	5322 532 10215	58	4822 403 30225	77	4822 492 51036	100	4822 528 80558
4	4822 505 10464	59	4822 411 60259	78	4822 492 61866	101	4822 403 30221
	4822 532 10215	60	4822 411 60258	79	4822 249 10032	102	4822 528 70254
6	4822 502 10089	61	4822 404 10262	81	4822 528 80567	103	4822 492 31051
7	4822 502 30048	62	4822 411 60261	82	4822 492 61867	105	4822 403 20118
8	4822 530 70047	63	4822 532 50692	83	4822 403 50731	106	4822 492 61869
9	4822 532 50816	64	4822 520 10357	84	4822 492 51032	107	4822 492 31117
10	4822 530 70121	66	4822 528 60082	85	4822 520 30276	108	4822 528 30167
11	4822 502 60908	67	4822 528 80588	87	4822 532 50262	110	4822 403 50838
12	4822 532 14521	68	4822 492 31157	88	4822 403 50646	111	4822 401 10601
13	4822 530 70119	69	4822 403 20111	89	4822 532 50706	113	4822 249 40075
14	4822 502 10814	70	4822 492 31099	91	4822 528 10287	115	4822 492 61989
51	4822 403 30226			92	4822 214 30212	117	4822 361 70296
52	4822 532 50268	72	4822 492 40525	93	4822 492 31113	118	4822 492 31048
53	4822 404 10223	73	4822 492 51029	94	4822 404 10221		
54	4822 358 30189	74	4822 532 50268	95	4822 520 40005		

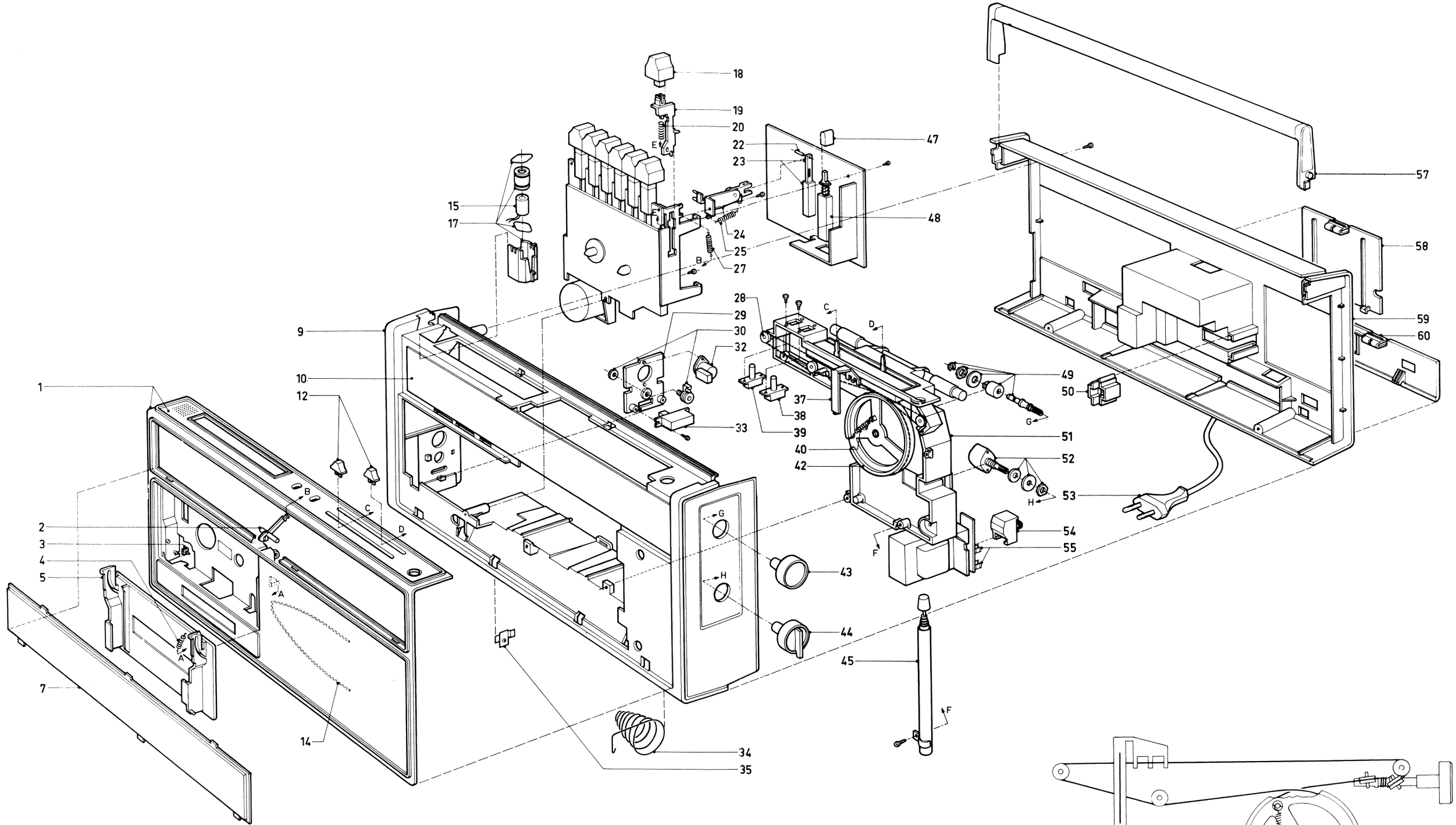

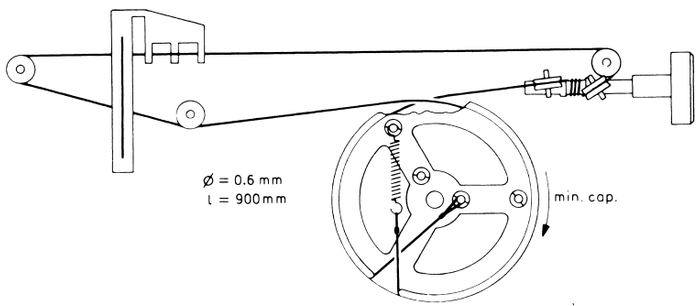

1	4822 423 50248	16		31		46	
2	4822 404 10258	17	4822 310 30408	32	4822 267 40121	47	4822 462 71002
3	4822 466 40112	18	4822 410 21544	33	4822 277 20168	48	4822 276 10625
4	4822 492 31154	19	4822 404 10262	34	4822 492 51091	49	4822 535 70564
5	4822 423 40403	20	4822 492 51036	35	4822 290 80283	50	4822 401 10677
6		21		36		51	4822 423 10067
7	4822 450 60168	22	4822 535 90892	37	4822 450 80475	52	4822 273 30238
8		23	4822 277 30515	38	4822 277 20173	53	4802 321 17026
9	4822 420 50078	24	4822 404 10221	39	4822 277 20157	54	4822 277 10238
10	4822 333 50527	25	4822 492 31113	40	4822 492 31154	55	4822 256 30139
11		26		41		56	
12	4822 411 60367	27	4822 492 31216	42	4822 528 80653	57	4822 498 40423
13		28	4822 528 80654	43	4822 413 40705	58	4822 423 40372
14	4822 492 61979	29	4822 404 10259	44	4822 411 20264	59	4822 422 50035
15	4822 242 30065	30	4822 267 30232	45	4822 303 30159	60	4822 423 40371

SK....							
MW(520-1605 kHz)	452 kHz	A		S8,9	S12,9,8		1 V max.
MW(520-1605 kHz)	512 kHz		max. cap.		S14		
	1635 kHz		min. cap.		CTd		1 V max.
	600 kHz				S13		
	1400 kHz				CTc		
FM(87.5-108 MHz)	10,7 MHz AM 1 kHz via 4,7 nF	C	min. cap.	S5,6 7,11	S10,7, 6,5		2 V max.
	10.7 MHz Δf 200 kHz (50 Hz) via 4,7 nF				S11	3 1	
FM(87.5-108 MHz)	109 MHz		min. cap.		CTb		
	86.5 MHz	D	max. cap.		S4		2 V max.
	86.5 MHz		max. cap.		S2		
	109 MHz		min. cap.		CT1a		

Repeat

1 Adjust for maximum slope and symmetry of the S-curve.

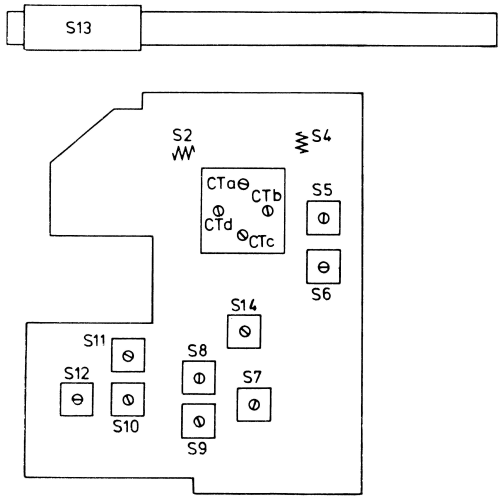

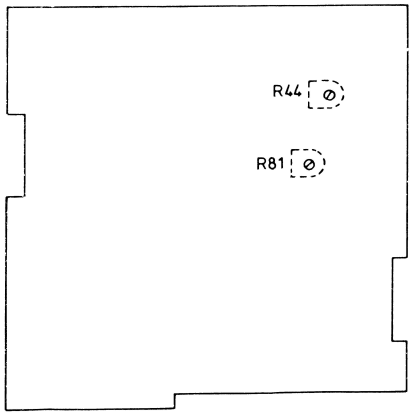

REPAIR HINTS (RECORDER)

Replacing the collector 92, Fig. 1

The collectors supplied by Concern Service must be glued to the mounting plates (in the set delivered by the factory, the collectors are riveted to the mounting plates). Glue to be used: for example 4822 390 30014.

1. Azimuth alignment
- Put some cellulose lacquer 4822 389 20005 on the azimuth screw before mounting the recorder in the cabinet.
- Mount the recorder in the cabinet.
- Insert a test cassette (6300 Hz) - 8945 600 13501 into the recorder.
- Connect an electronic voltmeter to 1
- Adjust for maximum output voltage by means of the srew which can be reached through a hole in the front, in the cassette compartment (Fig. 5).
- Do not use the recorder for the next hour.

2. Adjusting the head bracket 96, Figs. 1 and 2

3. Adjusting the bracket 507, Fig. 1
In position "fast forward winding" the tag of bracket 507 is pressed against bracket 105 so that idler wheel 109 must come clear of wheel 102.
However in position "stop" this tag must be just clear of the bracket.
Adjust the clearance between this tag and the bracket by bending the tag.
Check: When in position "stop" (without a cassette in the machine), the flywheel is turned manually in the normal direction of rotation, the two catches 91 are taken along.
The catches 91 rotate in directions opposite to each other; thus, they provide the required braking action.

4. Adjusting the flywheel bracket 503, Fig. 3

5. Adjusting the force of the pressure roller 76, Fig. 4
When the pressure roller is just free of the capstan, the pulling force must be 400...460 g. Adjust this force by bending tag A.

6. Checking the winding friction coupling 81, Fig. 1
For this check the Cassette Torque Meter, 4822 395 30054 is used (Fig. 6)
- Insert the cassette torque meter into the recorder. Set the recorder to position Playback.
- The Cassette Torque Meter should give the following indications: Right-hand reel disc 30-60 g-cm
  Left-hand reel disc 3-8 g-cm
  The meter reading should be as constant as possible.
- If the aforementioned values are not measured, the chassis must be removed.
- Degrease the belts and running surfaces of the flywheel, the idler wheels, the friction wheel and the reel discs.
- If the aforementioned values are still not measured, the winding friction wheel must be replaced. (See "Repair hints").

Note:
The friction wheel may also be checked by a measurement of the current taken from the external power supply.
- Connect the recorder to an external power supply of 9 V via a current meter.
- Set the recorder to position "Playback" and read the amount of current taken from the power supply.
- Block the rotating reel disc and read the increase in current.
  This should be 10-12 mA.

7. When operated from mains voltage, the recorder must be set (without cassette) to position "fast forward winding" or "fast rewinding".
Block the rotating reel disc; then a current increase of at least 120 mA must be measured. The manner of measuring is identical to that described in para 6.
If the value of 120 mA is not reached, the running surfaces of idler wheels and pulleys must be greased with alcohol. If necessary, cord 54 must be replaced.

8. Checking the speed
The tape speed is measured with the Cassette Service Set 4822 395 30052.
- Play back the 50-Hz side of the test cassette. Compare the 50-Hz frequency of the test cassette with the mains frequency.
- If the tape speed is too low, first check that the pressure roller, the winding friction wheel, the flywheel, etc. run smoothly.
- If necessary, readjust the speed with R81. To this end, the lower cabinet should be removed.

Note:
The tape speed may also be checked with a test cassette on which a 800-Hz signal has been modulated at intervals of 4.76 m.
Code number of cassette: 8945 600 13501.
- Play back the test cassette. Measure the time between two signals to be 98-102 seconds.

- TS -

TS1,3,4,5,6	BF494	5322 130 44195
TS7,8,9,10 11,21	BC548C	5322 130 44196
TS20	BC548B	4822 130 40937
TS12	BC328-25	4822 130 40988
TS13,14	AC187/188-01	5322 130 40319
TS2	BF495	4822 130 40947
TS15,18	AC187	5322 130 40314
TS16,17,19	AC188	5322 130 40456
TS22	BD136	5322 130 40712

- D -

D1,4,5,10 17,13,14,18 12,11,16	BA216	5322 130 30702
D3,6,7,8	AA119	5322 130 40229
D2	FV1043	4822 130 30845
D9,16,15 D19,21,22 23,24	BA100	5322 130 30226
	1N4001	5322 130 30197
D20	BZX79/C10	5322 130 30774

- R -

R55	Potm. vol. 20 kΩ	4822 105 10218
R54	Potm. Tone 100 kΩ	4822 105 10171
R44	Potm. 22 kΩ	4822 100 10051
R81	Potm. 220 Ω	4822 100 10019
R69	Thermistor 200 Ω	4822 116 30183

- C -

CA	Polyvaricon	4822 125 20189
C1	cer. cap. 35 pF 5%	4822 122 33068
C3,43	cer. cap. 40 pF 5%	4822 122 30013
C6	cer. cap. 140 pF 5%	4822 121 50458
C7,30	cer. cap. 3 pF+0,25 pF	4822 122 30019
C8	cer. cap. 15 pF 5%	4822 122 31058
C9	cer. cap. 4 pF+0,25 pF	4822 122 40015
C12	cer. cap. 5 pF+0,5 pF	4822 122 31045
C17	cer. cap. 8,2 pF	4822 122 30055
C34	cer. cap. 47 pF	4822 122 30088
C42	cer. cap. 2pF+0,25 pF	4822 122 31036

- L -

S3,16	FM IF trapcoil	4822 157 50791
S5,6	FM IFT	4822 153 50199
S7,11	FM IFT	4822 153 50201
S8	AM IFT	4822 156 40609
S9	AM IFT	4822 153 10279
S10	FM PRI.DET	4822 153 10236
S12	AM DET	4822 153 10281
S15	Loudspeaker	4822 240 30099
S13	MW. ANT.COIL	4822 157 50824
S16	Mainstransformer	4822 145 20206
S14	MW. OSC. COIL	4822 156 30485

- Misc -

VL1	500 mA (T)	4822 253 30017
	Micawasher for TS22	5322 255 40088
	Ferrite BAR	4822 526 10113

Safety regulations require that the set be restored to its original condition and that parts which are identical with those specified, be used.