Service
Service
Service

Service Manual

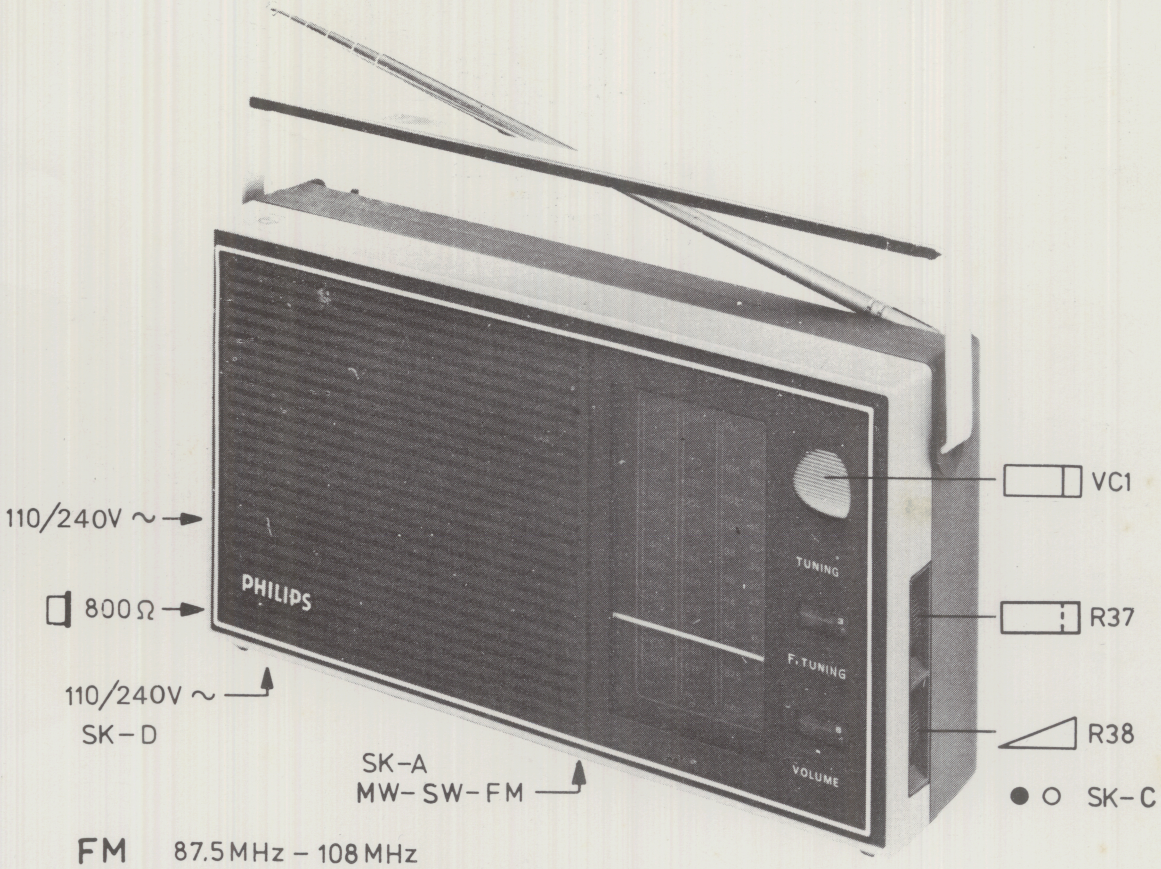

FM	87.5 MHz – 108 MHz
SW	5.95 MHz – 18.0 MHz (50.4–16.7 m)
MW	520 kHz – 1605 kHz (577 – 187 m)
⊣⊢	6V (4x1.5V)

5184A

Safety regulations require that the set be restored to its original condition and that parts which are identical with those specified, be used.

Subject to modification

PHILIPS

Service
Service
Service

Service Manual

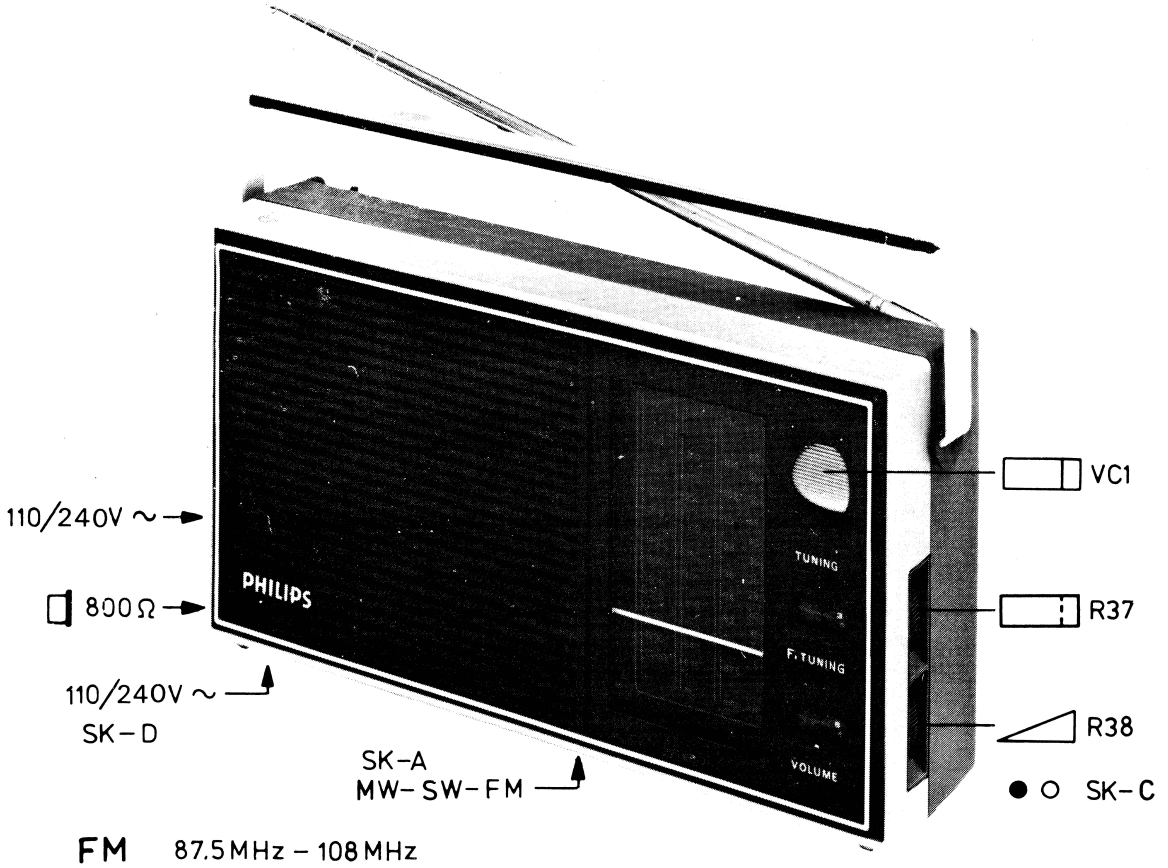

FM	87.5 MHz – 108 MHz
SW	5.95 MHz – 18.0 MHz (50.4–16.7 m)
MW	520 kHz – 1605 kHz (577 – 187 m)
⊣⊢	6V (4×1.5V)

5184A

Safety regulations require that the set be restored to its original condition and that parts which are identical with those specified, be used.

Subject to modification

PHILIPS

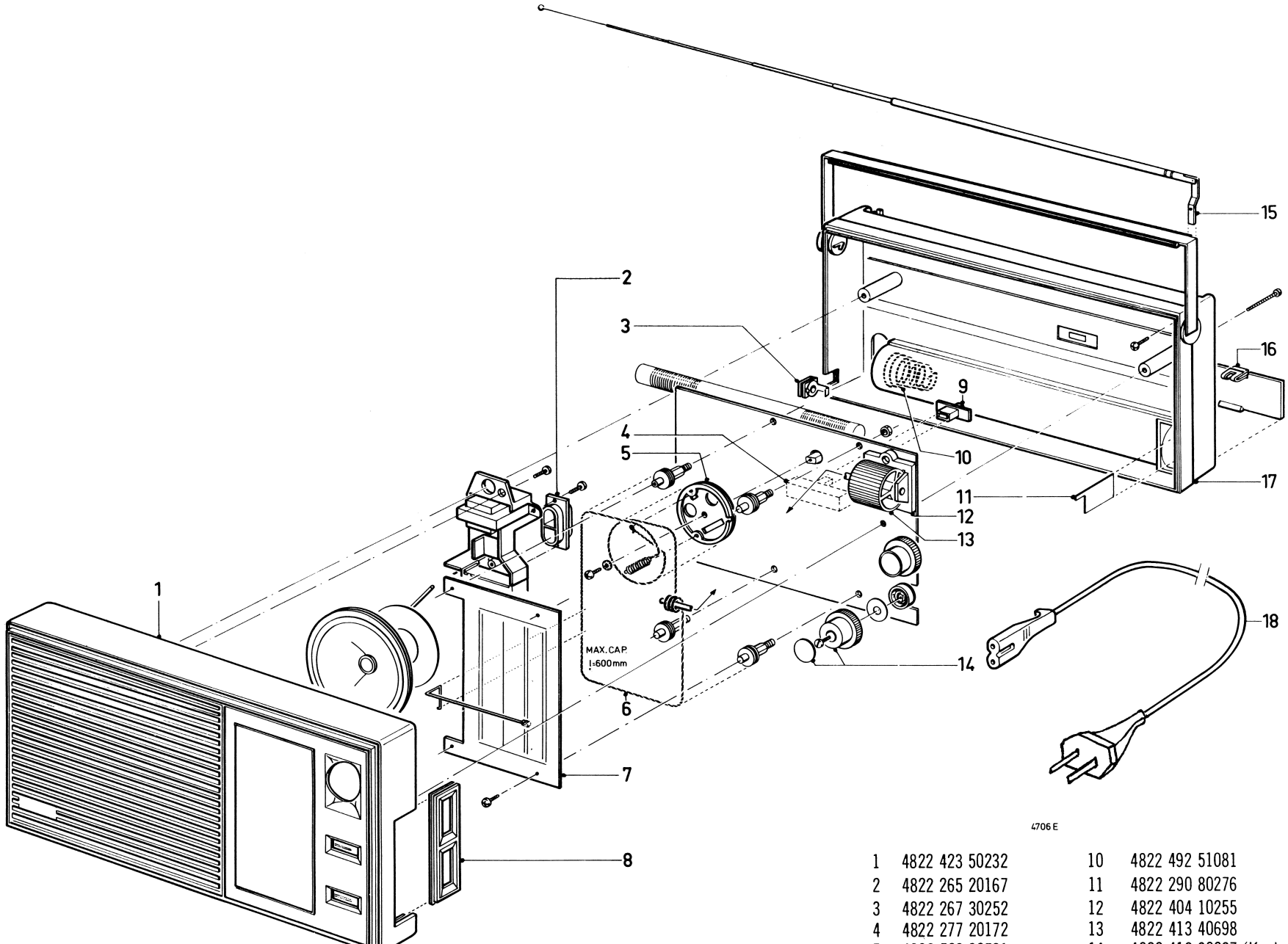

1	4822 423 50232	10	4822 492 51081
2	4822 265 20167	11	4822 290 80276
3	4822 267 30252	12	4822 404 10255
4	4822 277 20172	13	4822 413 40698
5	4822 528 80531	14	4822 412 30027 (Knob + inserts for Vol. & P. Tune)
6	4822 321 30132	15	4822 303 30156
7	4822 333 10029	16	4822 423 40365
8	4822 459 50171	17	4822 421 30043
9	4822 411 50337	18	4802 321 17024

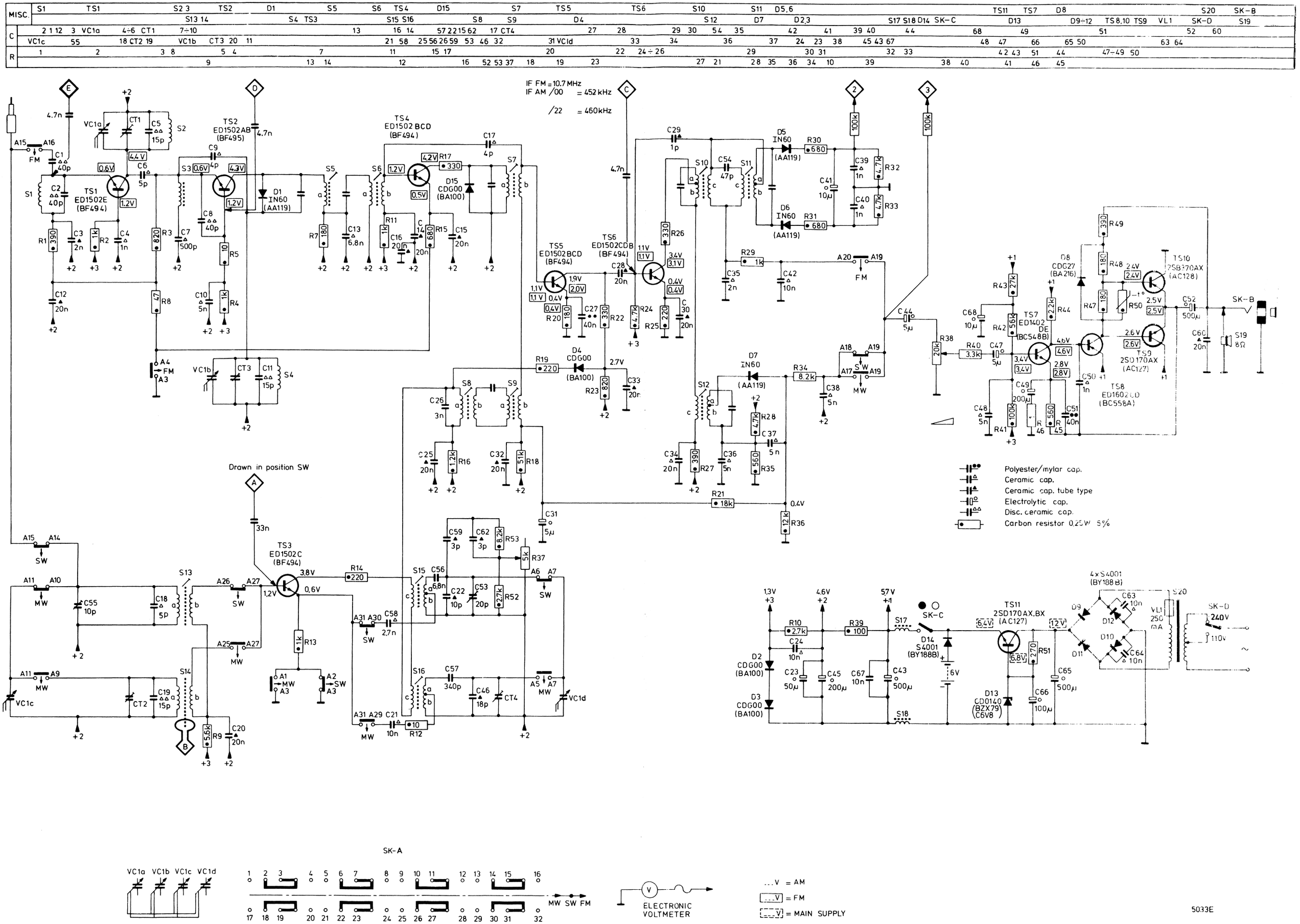
MISC.
C
R
IF FM = 10.7 MHz
IF AM /00 = 452 kHz
/22 = 460 kHz
TS1 ED1502E (BF494)
TS2 ED1502AB (BF495)
TS3 ED1502C (BF494)
TS4 ED1502 BCD (BF494)
TS5 ED1502BCD (BF494)
TS6 ED1502CDB (BF494)
TS7 ED1402 DE (BC548B)
TS8 ED1602LD (BC558A)
TS9 2SD170AX (AC127)
TS10 2SB370AX (AC128)
TS11 2SD170AX.BX (AC127)
D1 IN60 (AA119)
D4 CDG00 (BA100)
D5 IN60 (AA119)
D6 IN60 (AA119)
D7 IN60 (AA119)
D8 CDG27 (BA216)
D15 CDG00 (BA100)
Drawn in position SW
Polyester/mylar cap.
Ceramic cap.
Ceramic cap. tube type
Electrolytic cap.
Disc. ceramic cap.
Carbon resistor 0.25W 5%
4xS4001 (BY188B)
TS11 2SD170AX.BX (AC127)
D14 S4001 (BY188B)
D13 CD0140 (BZX79) (C6V8)
SK-A
SK-B
SK-C
SK-D
ELECTRONIC VOLTMETER
...V = AM
...V = FM
...V = MAIN SUPPLY
5033E

CS51433

MISC	SK-C SK-D TP1 SK-A TS1 TS3 SK-B D4 D1 TS2 D7 TS5 TS6 TS4 D5 D6 D15 D2 D3 TS7 TS8 D8 TS9 TS10 TS11 D9 ÷ D14	MISC
S	14a 17 15 16 1 13 2 14b 8 3 9 4 5 12 6 10 11 7 18 20 19	S
C	59 1 22 2 18 57 4 21 5 23 6 26 9 46 7 42 32 8 12 27 30 28 15 29 17 41 54 24 49 68 67 45 50 60 64 66	C
C	62 56 53 3 55 58 47 20 44 25 19 11 13 31 38 10 34 33 36 37 14 16 39 40 35 48 43 51 65 52 63	C
R	37 53 12 9 2 1 21 7 3 8 5 23 4 11 24 26 30 15 31 10 41 42 39 48 50 45	R
R	38 52 40 14 13 16 19 34 18 29 36 22 27 35 25 20 28 32 17 33 46 44 43 47 49 51	R

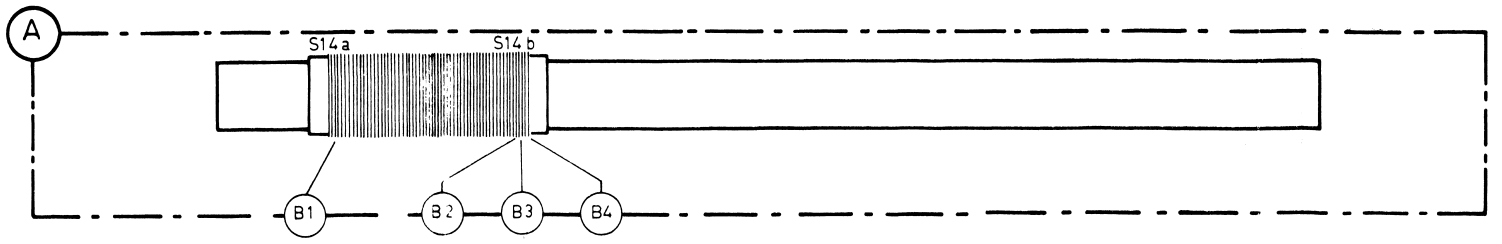

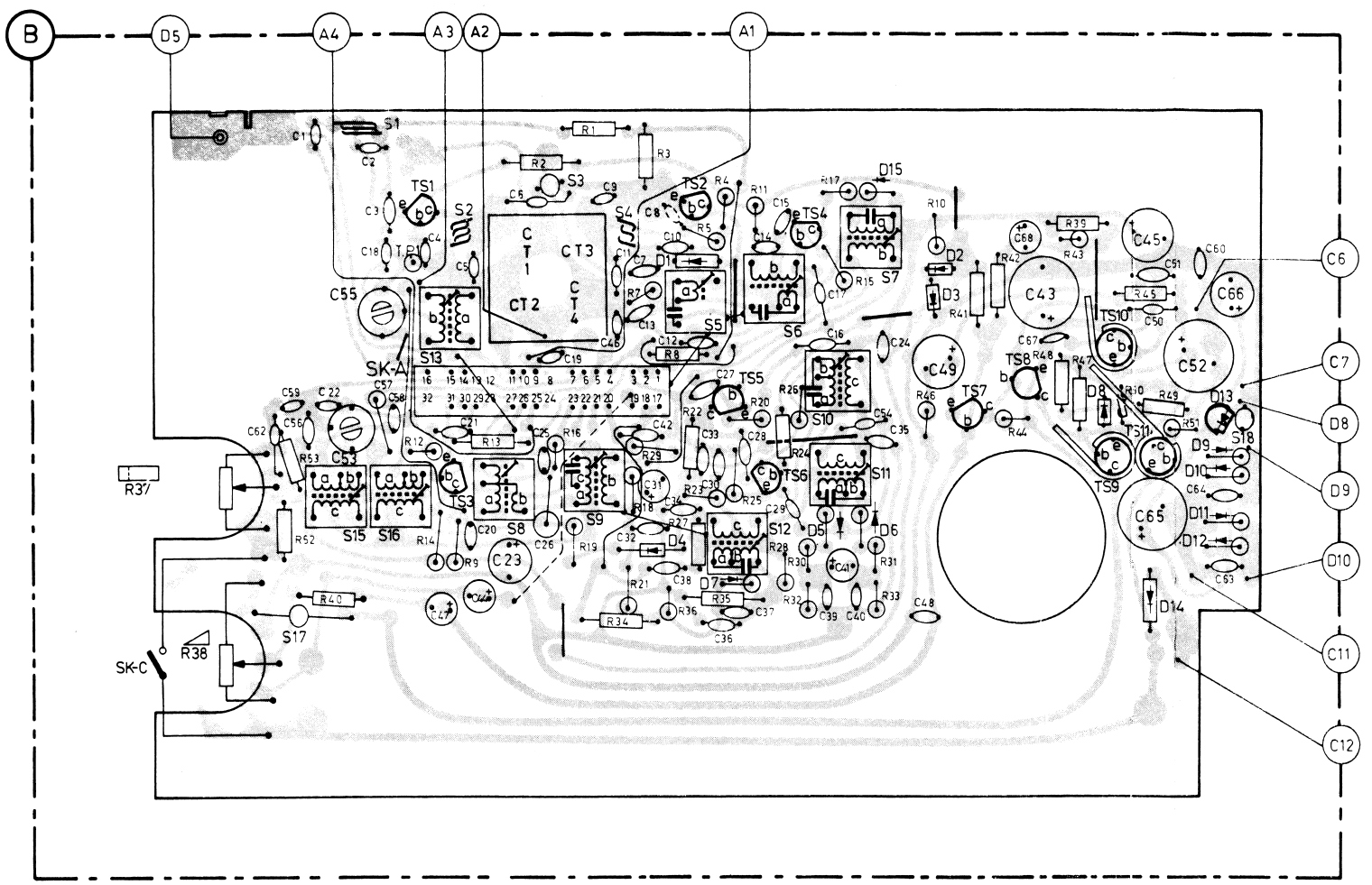

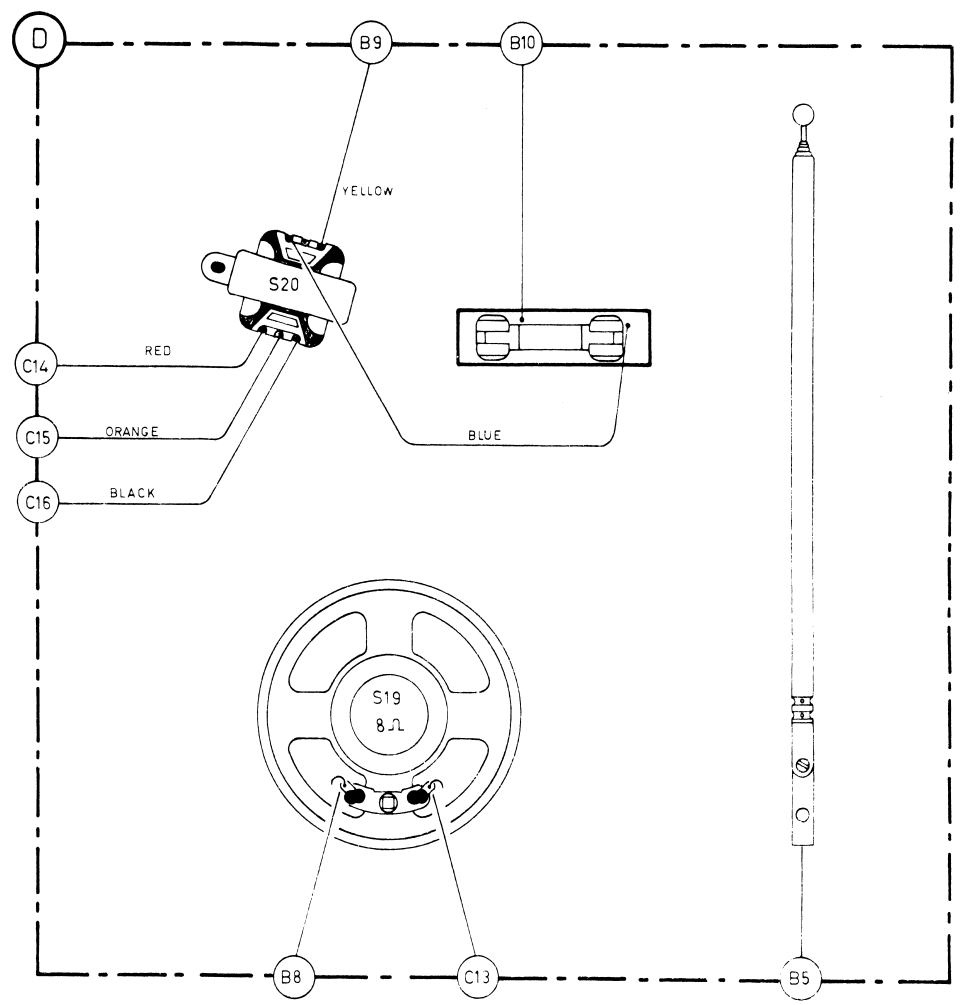

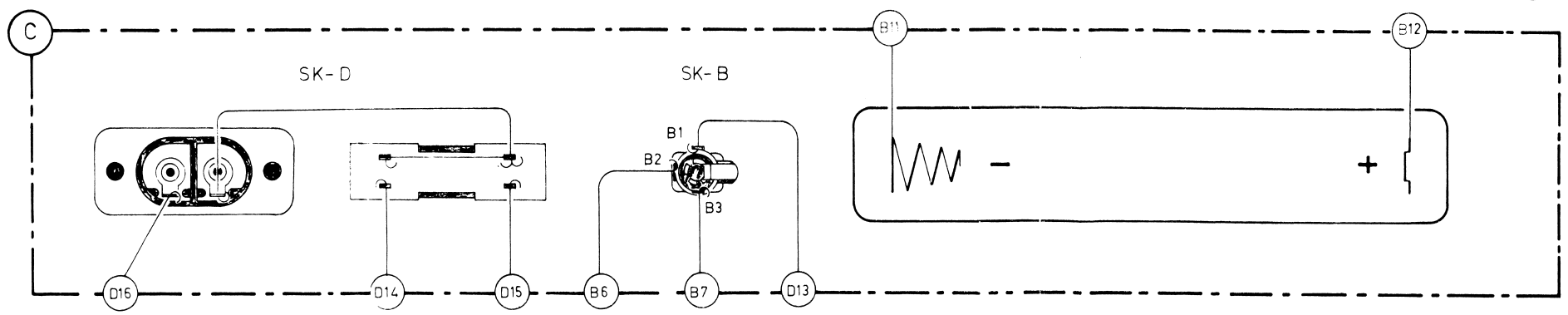

4989D

CS51435

MISC	SK-C	SK-D	TP1	SK-A	TS1	TS3	SK-B	D4	D1	TS2	D7	TS5	TS6	TS4	D5	D6	D15	D2	D3	TS7	TS8	D8	TS9	TS10	TS11	D9 ÷ D14	MISC
S			14a	17	15	16	1	13	2	14b	8	3	9	4	5	12	6	10	11	7				18		20	19	S
C		59	1	22	2	18	57	4	21	5	23	6	26	9	46	7	42	32	8	12	27	30	28	15	29	17	41	54	24	49	68	67	45	50	60	64	66			C
C		62	56	53	3	55	58	47	20	44	25	19	11	13	31	38	10	34	33	36	37	14	16	39	40	35	48	43	51	65	52	63								C
R	37		53			12	9		2	1	21	7	3	8	5	23	4	11	24	26	30	15	31	10	41	42	39	48	50	45										R
R	38		52	40		14	13	16	19	34	18	29	36	22	27	35	25	20	28	32	17	33	46	44	43	47	49	51												R

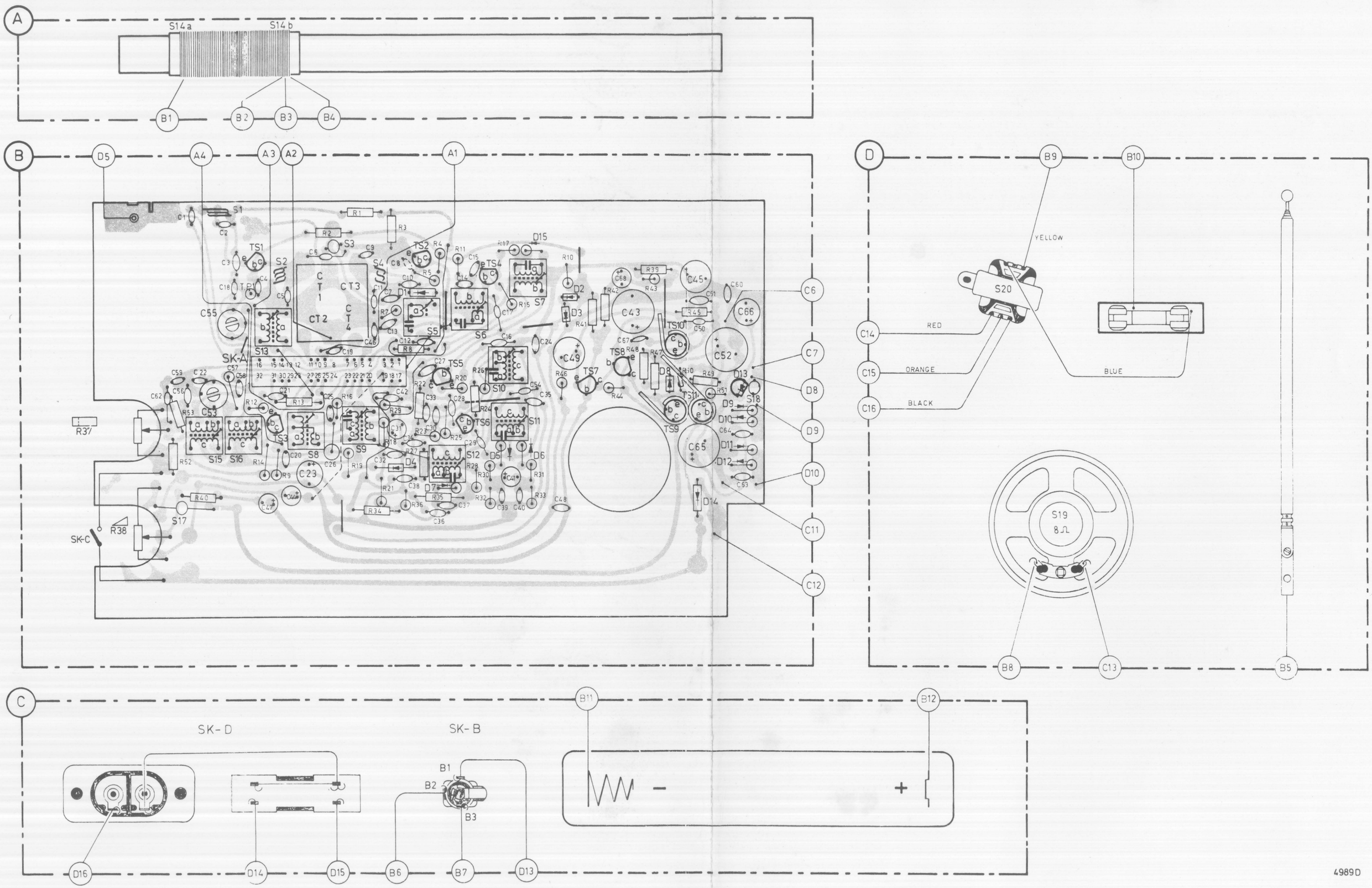

CS51435

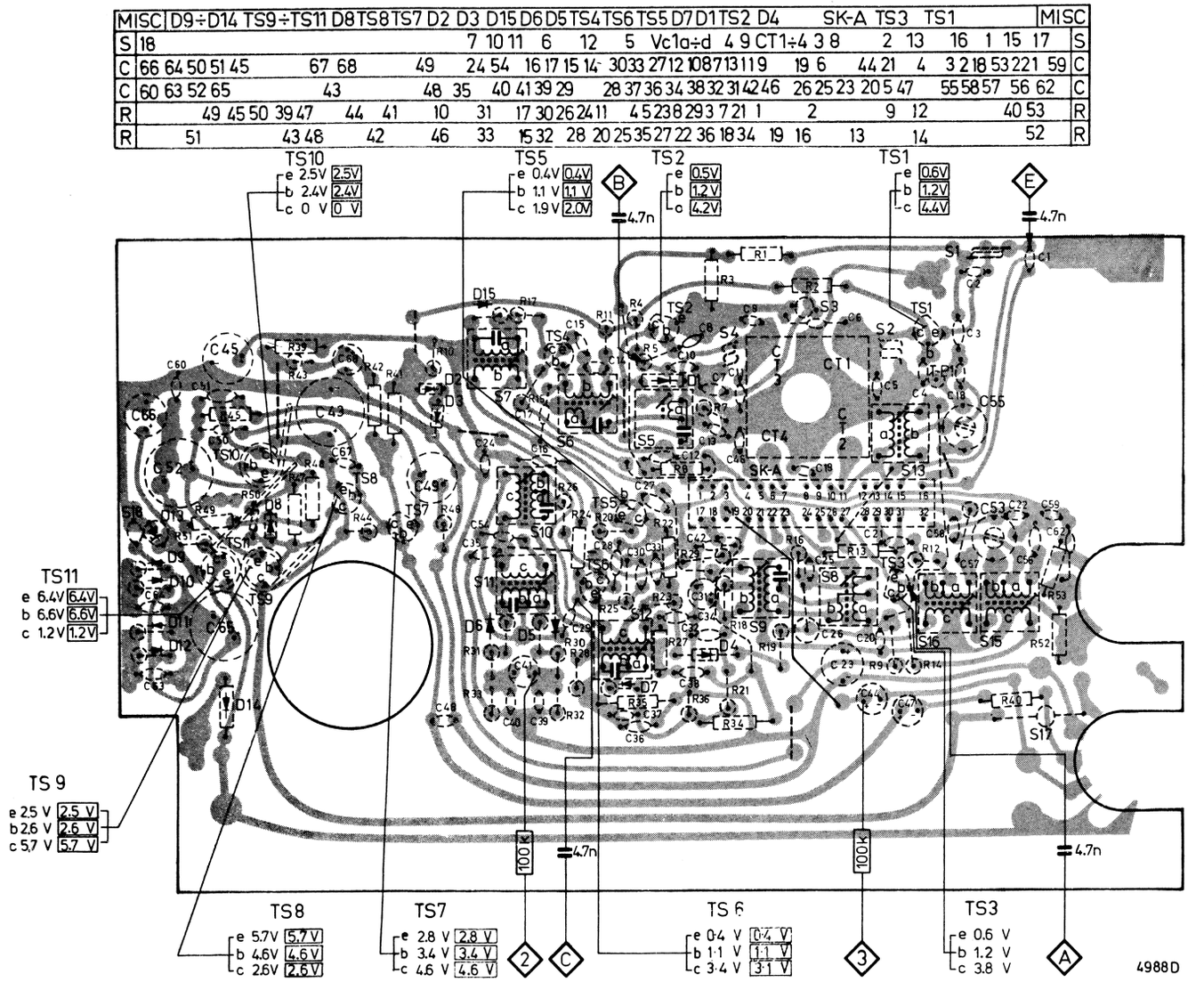

-TS-		
TS1,3,4,5,6	BF494	5322 130 44195
TS2	BF495	4822 130 40947
TS7	BC548B	4822 130 40937
TS8	BC558	4822 130 40941
TS9	AC128	5322 130 40095
TS10,11	AC127/128 pair	5322 130 40382

-D-		
D1,5,6,7	AA119	5322 130 40229
D2,3,4,15	BA100	5322 130 30226
D8	BA216	4822 130 30702
D9,10,11,12 14	IN4001	5322 130 30197
D13	BZX79/C7V2	5322 130 30766

-C-		
C21	10 nF,10 %	4822 121 50582
C26	3 nF,2 %	4822 121 50414
C27,46	40 nF,cer.	4822 122 31152
C53	Trimmer 22 pF	4822 125 50045
C55	Trimmer 10 nF	4822 125 50062
C57	330 pF,2 %	4822 121 54019
VC1	Varco	4822 125 20186

-S-		
S3,17,18	FM IFT	4822 157 50791
S5,6	FM IFT	4822 153 50199
S7,11	FM IFT	4822 153 50201
S8	AM IFT	4822 156 40609
S9	AM IFT	4822 153 10279
S10	FM R.D. PRI	4822 153 50209
S12	AM DET.	4822 153 10281
S13	SW ANT.	4822 156 40618
S14	Ferroceptor	4822 158 60382
S15	SW OSC.	4822 156 30519
S16	MW OSC.	4822 156 30518
S19	Loudspeaker	4822 240 30096
S20	Transformer	4822 145 30196

-R-		
R37	50 kΩ potm.	4822 101 20466
R38	20 kΩ potm.switch	4822 101 50195
R50	Thermistor	4822 116 30117

MISC	D9÷D14 TS9÷TS11 D8 TS8 TS7 D2 D3 D15 D6 D5 TS4 TS6 TS5 D7 D1 TS2 D4 SK-A TS3 TS1	MISC
S	18 7 10 11 6 12 5 Vc1a÷d 4 9 CT1÷4 3 8 2 13 16 1 15 17	S
C	66 64 50 51 45 67 68 49 24 54 16 17 15 14 30 33 27 12 10 8 7 13 11 9 19 6 44 21 4 3 2 18 53 22 1 59	C
C	60 63 52 65 43 48 35 40 41 39 29 28 37 36 34 38 32 31 42 46 26 25 23 20 5 47 55 58 57 56 62	C
R	49 45 50 39 47 44 41 10 31 17 30 26 24 11 4 5 23 8 29 3 7 21 1 2 9 12 40 53	R
R	51 43 48 42 46 33 15 32 28 20 25 35 27 22 36 18 34 19 16 13 14 52	R

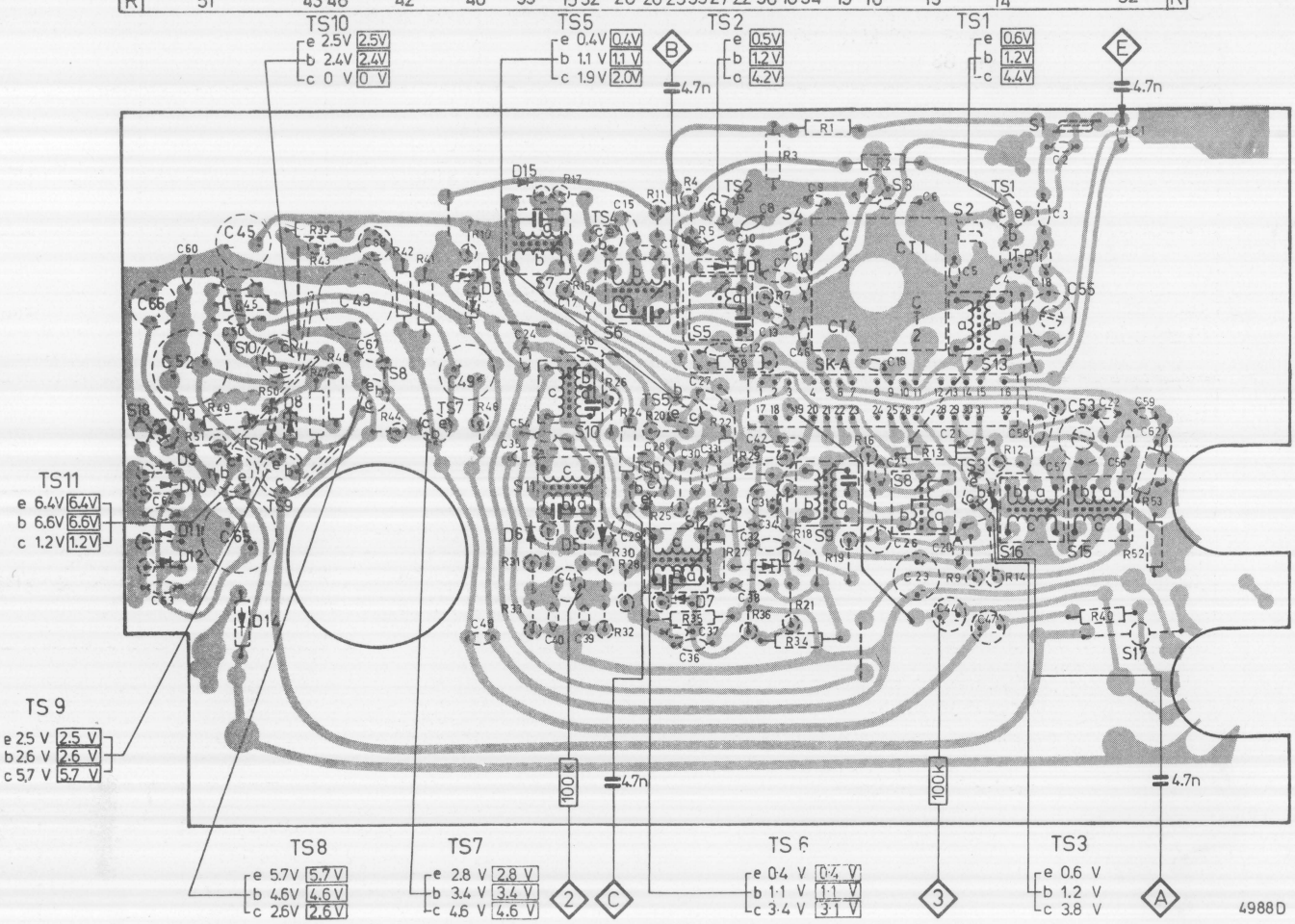

-TS-		
TS1,3,4,5,6	BF494	5322 130 44195
TS2	BF495	4822 130 40947
TS7	BC548B	4822 130 40937
TS8	BC558	4822 130 40941
TS9	AC128	5322 130 40095
TS10,11	AC127/128 pair	5322 130 40382

-D-		
D1,5,6,7	AA119	5322 130 40229
D2,3,4,15	BA100	5322 130 30226
D8	BA216	4822 130 30702
D9,10,11,12 14	IN4001	5322 130 30197
D13	BZX79/C7V2	5322 130 30766

-C-		
C21	10 nF,10 %	4822 121 50582
C26	3 nF,2 %	4822 121 50414
C27,46	40 nF,cer.	4822 122 31152
C53	Trimmer 22 pF	4822 125 50045
C55	Trimmer 10 nF	4822 125 50062
C57	330 pF,2 %	4822 121 54019
VC1	Varco	4822 125 20186

-S-		
S3,17,18	FM IFT	4822 157 50791
S5,6	FM IFT	4822 153 50199
S7,11	FM IFT	4822 153 50201
S8	AM IFT	4822 156 40609
S9	AM IFT	4822 153 10279
S10	FM R.D. PRI	4822 153 50209
S12	AM DET.	4822 153 10281
S13	SW ANT.	4822 156 40618
S14	Ferroceptor	4822 158 60382
S15	SW OSC.	4822 156 30519
S16	MW OSC.	4822 156 30518
S19	Loudspeaker	4822 240 30096
S20	Transformer	4822 145 30196

-R-		
R37	50 kΩ potm.	4822 101 20466
R38	20 kΩ potm.switch	4822 101 50195
R50	Thermistor	4822 116 30117

SK - Wave range	Signal to		Tuning	Adjust	Indication	
MW (520-1605 kHz)	452 kHz/00 460 kHz/22 ΔF 20 kHz (50 Hz) via 33 nF	A	Min. Cap.	S12,S9,S8		1 Vmax.
MW (520-1605 kHz)	512 kHz	B	Max.Cap.	S16		1 Vmax.
	1635 kHz		Min. Cap.	CT4		
	580 kHz		Tune in	S14a,b		
	1400 kHz			CT2		
SW (5.95-180 MHz)	5.8 MHz	E	Max.Cap.	S15		1 Vmax.
	18.7 MHz		Min.Cap.	C53		
	6.2 MHz		Tune in	S13		
	17.5 MHz			C55		
FM (87.5-108 MHz)	1 10.7 MHz ΔF 200 kHz 50 Hz via 5 nF	C	Min.Cap.	S10	2	
		D		S7,S6,S5		
				S11	2 3	
FM (87.5-108 MHz)	86.5 MHz	E	Max.Cap.	S4		1 Vmax.
	109 MHz		Min.Cap.	CT3		
	89 MHz		Tune in	S2		
	107 MHz			CT1		

1 Disconnect a connection of C41.
Adjust for max. height and symmetry.
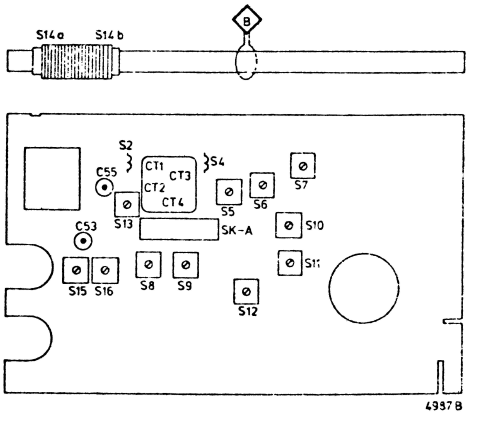
2 Restore the original connection.
Adjust for max. slope and symmetry of the "S"-curve.