Cassette car radio 90DC888/00

Service
Service
Service

OUTPUT I.C. TYPE: TDA 1516Q
PART NO.: 4822 · 209 · 72894.

For repair information of the cassette mechanism see Service Manual of Car cassette deck P6-17.

Service Manual

12 V

1 = PRESET 1 TO 5
2 = AUTOSTORE
3 = BAND SELECT
4 = NARROW–WIDE AM
5 = SEARCH DOWN
6 = SEARCH UP
7 = MUTE
8 = RADIO/TAPE
9 = SELECTOR AUDIO MODE
10 = AUDIO CONTROL
11 = POWER ON/OFF
12 = FAST FORWARD (ALSO MSS)
13 = FAST REWIND ((ALSO MSS)
14 = REVERSE–EJECT
15 = METAL/CHROOM
16 = MSS
17 = CASSETTE ENTRY
18 = DOLBY ON/OFF
19 = LOUDNESS
20 = MONO/STEREO
21 = LCD

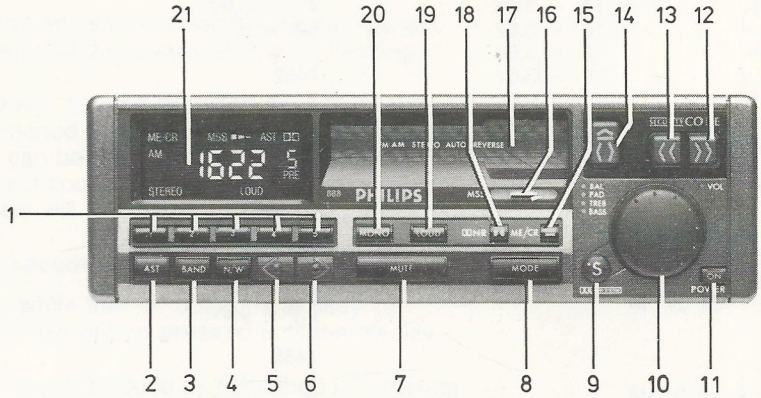

44 290 A11

Documentation Technique Service Dokumentation Documentazione di Servizio Huolte-Ohje Manual de Servicio Manual de Serviço

Subject to modification
GB 4822 725 22291
Printed in The Netherlands

© Copyright reserved

PHILIPS

Published by
Service Consumer Electronics

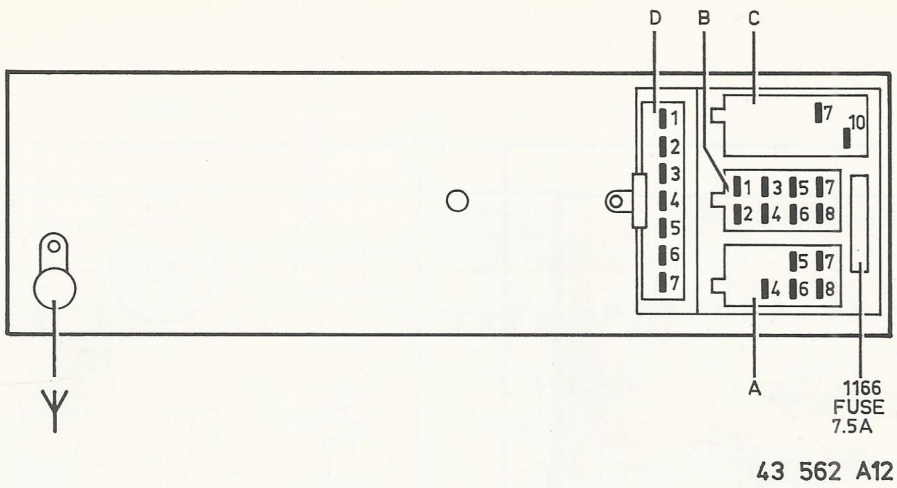

CONNECTIONS OF BLOCK

A4: + 14.4 V ⎓ PERMANENT
A5: AUTOM. AERIAL
A6: EXT. ILLUMINATION
A7: + 14.4 V ⎓ SWITCHED
A8: ⊥

B1: RIGHT REAR
B2: 7 W - 4 Ω
B3: RIGHT FRONT
B4: 7 W - 4 Ω
B3: RIGHT
B2: 20 W - 4 Ω

B5: LEFT FRONT
B6: 7 W - 4 Ω
B7: LEFT REAR
B8: 7 W - 4 Ω
B5: LEFT
B8: 20 W - 4 Ω

C7 : REMOTE SEARCH
C10 : ⊥ REMOTE SEARCH
D-1D-7: LINE OUT

TECHNICAL DATA

General

Power supply	: + 14.4 V ⎓
Remote control unit for automatic search	: 22EN9875
Line out cable	: 22EA6164
Retractable unit	: 22EA6020
Dimensions (w×h×d)	: 180×51×150 mm

Radio

MW	: 531-1600 kHz (565-186 m)
FM	: 87.5-108 MHz
Frequency grid FM	: 50 kHz/100 kHz search
Frequency grid MW	: 9 kHz (search) 1 kHz (manual tuning)
IF-AM	: 455 kHz
IF-FM	: 10,7 MHz
Sensitivity for 26 dB S/R	: 110 µV (MW) 3 µV (FM)
Limitation α −3 dB	: 15 µV
10 dB crosstalk	: 150 µV

Cassette player

Number of tracks	: 2 × 2
Tape speed	: 4.76 cm/sec
Wow and flutter	: ≤ 0.35%
Crosstalk	: ≥ 38 dB
Dolby NR	: ≥ 8 dB

Amplifier

Output power (D=10%)	: 2 × 20 W ± 1 dB (2 × 4Ω) 4 × 5,5 W ± 1 dB (4 × 4Ω)
Line out	: 630 mV
Bass	: +/−12 dB à 100 Hz
Treble	: +/−12 dB à 10 kHz
Loudness	: 8 dB à 125 Hz 5 dB à 10 kHz

WARNING

ESD

All ICs and many other semi-conductors are susceptible to electrostatic discharges (ESD).
Careless handling during repair can reduce life drastically.
When repairing, make sure that you are connected with the same potential as the mass of the set via a wrist wrap with resistance.
Keep components and tools also at this potential.

SERVICE HINTS

µC Test

The µC test is invoked by switching on the set **while** Preset 1 and Preset 2 are already pressed.
Now the µC tests the RAM.
If no errors are detected the display shows the following pattern "----".
This test can be terminated by switching off the set.

Display test

The display test is invoked by switching on the set **while** Preset 1 and Preset 3 are already pressed.
The numbers 0 thru 9 followed by all segments together are alternately displayed with a repetition frequency of approx 1Hz.
The procedure can be stopped by pressing Preset 1, after release of this key the procedure will continue.
This test can be terminated by switching off the set.

Activating security code

Switching the set on **while** the " >" button is already pressed, **and keep this button pressed** until you hear a beep.
The security code is now activated.

Entry of the security code

- Switch on the set.
- Press Preset 1.
- Press the "<" and/or " >" buttons until the display shows the **first** figure of the correct Security Code.
- Press Preset 1 again.
- Press the "<" and/or " >" buttons until the display shows the **second** figure of the correct Security Code.
- Repeat this process until the display shows the complete correct Security Code
- Press Preset 1 once more, you will hear a beep and the set starts to operate.

If you have entered an incorrect Security Code, you will hear an error beep and the display shows an flashing **"Err"**.
Now you have to wait for one minute.
After the waiting period the display shows **"CODE"** and the correct code can be entered now.
If again an incorrect code is entered, a doubled waiting period of 2 minutes will follow and so on.

Deactivating the security code

Switch on the set **while** the " >" button is already pressed **and keep this button pressed** until the display shows **"CODE"**.
Enter the correct Secuirity Code as described in "entering the Security Code".
You will hear two beeps indicating that the protection is switched off.

1100

C101 = ⊥
C102 = NC
C103 = ⊥
C104 = 0V
C105 = 1.8V
C106 = 8.7V
C107 = VC-FM,
87.5 MHz = 1.3V
108MHz = 5.7V
C108 = 1.4V
C109 = ⊥
C110 = 1.8V
C111 = 2.9V
C112 = 0.2V
C113 = 1.9V

1101

1 = 0V
2 = ⊥
3 = 0V
4 = VC-AM
= 1.4V..7.2V
= 1.9V
5 = 8.5V
6 = 2.9V
7 = 0V no signal
8 = 4V signal
9 = 3.3v
10 = ⊥
11 = 0.1V
12 = 1.3V
13 = 1.3V
14 = 0V
15 = 4.9V

1102

2 = 2.7V
4 = 4.3V signal
0.5V no signal
5 = 4.5V
6 = 8.3V
7 = 8.7V
8 = ⊥

1134

1 = 5.1V DB ON
0.1V DB OFF
2 = 4.4V
3 = 4.4V
4 = 3.6V
6 = 0.1V
7 = 3.6V
8 = 4.4V
9 = 0.1V
10 = 8.8V

1135

1 = 0.8V mono
5.1V stereo
2 = 3.6V
3 = 3.5V
4 = 2.7V
5 = 2.4V
6 = 0.1V
7 = 1.8V
8 = 8.5V
9 = 4.8V
10 = 4.4V
11 = 0.1V mono
5V stereo
12 = 3.6V
13 = 0.3V
14 = 5.1V
15 = 3.5V
16 = 2.5V
17 = 3.6V
18 = 3.6V
19 = 3.6V
20 = 3.6V

7008

E = 8.2V
B = 8.7V
C = 13.4V

7009

E = 8.7V AM
B = 7.9V AM 8.1V FM
C = 8.5V AM 0V FM

7010

E = 0V
B = 0V FM 0.7V AM
C = 8.1V FM 0.1V AM

7011

E = 14.2V
B = 13.5V
C = 10V

7030

E = 1.9V
B = 2.6V
C = 5.5V

7031

E = 1.9V
B = 2.5V
C = 5.5V

7032

E = 1.4V
B = 0.8V FM 1.3V AM
C = 0V FM 1.4V AM

7033

E = 1.4V
B = 0.8V FM 1.3V AM
C = 0V FM 1.4V AM

7034

E = 0V
B = 0.6V
C = 1V

7040

E = 0.1V
B = 0.2V
C = 0.1V

7041

E = 0.1V
B = 0.2V
C = 0.1V

7201

E = 0V
B = 0V
C = 5V 0V mute

7211-7311

1 = 2.3V
2 = 2.3V
3 = 0.1V
4 = 2.3V
5 = 7V
6 = 14.1V
7 = 0.1V
8 = 14.1V
9 = 6.9V
10 = 14.1V
11 = 14V
12 = 7V
13 = 2.3V

7411

E = 5.7V
B = 4.2V
C = 8.2V

7412

E = 5.7V
B = 6.3V
C = 8.2V

7451

1 = 14V
2 = 2.8V
4 = 8.9V
5,8 = ⊥

7452

1 = 14V
2 = 2.7V
4 = 8.8V
5,8 = ⊥

7454

1 = 13.1V
2 = 8.8V
4 = 5.7V
5,8 = 0.2V

7455

E = 14V
B = 13.3V
C = 14.2V

7456

E = 0.3V
B = 0.3V
C = 5.2V

7511

E = 5.6V
B = 6.2V
C = 8.2V

7512

E = 5.6V
B = 6.2V
C = 8.2V

7513

E = 0V
B = 0V
C = 6.5V

7811

1 = 8.5V
2 = 0.8V
3 = 4.2V signal
0.4V no signal
4 = 0V
5 = 0.1V
6 = 0.3V
7 = ⊥
8 = 8.6V
9 = 4.8V (SDA)
10 = 4.8V (SCL)
11 = 4.2V
12 = 4.6V
13 = 4.6V
14 = 2.5V
15 = 4.4V
16 = 2.9V
17 = 2.9V
18 = 2.9V
19 = 2.9V
20 = ⊥

7821

1 = 2.3V
2 = 2V
3 = 5V
4 = 4V
5 = 4.9V
6 = 0V
7 = 0V
8 = 0V
9 = 0V
10 = 5V
11 = 0V
12 = 0V
13 = 0V
14 = 0V
15 = 0.1V
16 = 4.8V
17 = 4.8V
18 = 0.5V
19 = 0V
20 = 0V
21 = 0V
22 = 5.0V
23 = 0V
24 = 0V
25 = 0V
26 = 0V
27 = 0V
28 = 0V

7822

1 = 8.6V
2 = 3.6V
3 = 0V <
5V <
4 = 3.5V
5 = 3.1V
6 = 3.1V
7 = 3.1V
8 = 0V
9 = 3.1V
10 = 0V
11 = 3.1V
12 = 3V
13 = 3V
14 = 3.4V
15 = 0V
16 = 3.4V

7823

1 = 2V
2 = 0V
3 = 2.1V
4 = 0V
5 = 0V
6 = 0V
7 = 0V
8 = 0V
9 = 8.7V

7824

1 = 4.8V
2 = 0V
3 = 4V
4 = 4V
5 = 4V
6 = 4V
7 = 4V
8 = 4V
9 = 0V
10 = 6.3V
11 = 0V
12 = 7.9V
13 = 0V
14 = 0V
15 = 4V
16 = 4V
17 = 0V
18 = 0V
19 = 0V
20 = 0V
21 = 4V
22 = 0V
23 = 4V
24 = 4V
25 = 4V
26 = 4V
27 = 8V
28 = 4.8V

7851

1 = 0.2V
2 = 0.2V
3 = 0.2V
4 = 0.2V
5 = 5V
6 = 5V
7 = 0.2V
8 = 5.3V

7854

1 = 4MHz
2 = 4MHz
3 = 4.8V
4 = ⊥
5 = 1.9V
6 = 1.9V
7 = 1.9V
8 = 0.2V FM
8.5V AM
9 = 40KHz
10 = 4.8V (SDA)
11 = 4.8V (SCL)
12 = ⊥
13 = VC-FM
14 = 2.2V
15 = NC
16 = 9.9V

For checking and adjusting see general procedures

Check	SK				Setting of controls		
FM-Mute	FM	93 MHz, 1 mV	B			1 0 dB (775 mV)	
		no signal				−28 dB ≤ 1 ≤ −38 dB	
26 dB-SNR	FM	93 MHz, 6 µV △f = 22.5 kHz f mod = 1 kHz	B			1 0 dB (775 mV)	
		93 MHz, 6 µV without mod.				1 ≥ 26 dB	
	MW	990 kHz, 110 µV 1 kHz, 30% AM	A			1 0 dB (775 mV)	
		990 kHz, 110 µV without mod.				1 ≥ 26 dB	
Demodulated FM-levels	FM	93 MHz. 1 mV △f = 22.5 kHz f mod = 1 kHz	B			3 200 mV ±1 dB	
		93 MHz, 1 mV △f = 6.75 kHz f mod. = 19 kHz				3 50 mV ± 1 dB	
Demodulated AM-level	MW	990 kHz, 1 mV 1 kHz, 30% AM	A			4 350 mV ± 1 dB	
Cross talk	FM	93 MHz, 1 mV stereo signal	B			L 1 R 2 0 dB (775 mV)	
		93 MHz, 1 mV stereo-R				R 2 - L 1 ≥ 21 dB	
	AM	990 kHz 1mV 1 kHz 30% AM	A			R 2 - L 1 ≥ 16 dB	
SDS/10 dB Cross talk	FM	93 MHz, 1 mV stereo signal	B			L 1 R 2 0 dB (775 mV)	
		93 MHz, 140 µV stereo-R				R 2 - L 1 = 10 dB	
Search level FM	FM	93 MHz, 30 µV	B			5 2.25 V-DC	
Search level AM	MW	990 kHz, 70 µV	A			6 1.75 V-DC	
VC-FM	FM			87.5 MHz		7 ≥ 1.0 V-DC	
				108 MHz		7 ≤ 6.0 V-DC	
VC-AM	AM			531 kHz		8 ≥ 0.8 V-DC	
				1629 kHz		8 ≤ 8.0 V-DC	
I.A.C.	FM	τ Vp T τ = 10 µsec T = 300 µsec Vp = 60 mV	C				9 25-50 µs

For adjusting and checking see general procedures

Adjustment	SK					
Quadrature detector	FM	93 MHz, 10 µV △f = 75 kHz	B		5042	1
α-3 dB	FM	93 MHz, 1 mV △f = 22.5 kHz f mod = 1 kHz	B			1 0 dB (775 mV)
		93 MHz, 15 µV △f = 22.5 kHz f mod = 1 kHz	B		3118	1 -3 dB
AM-search level	MW	990 kHz, 70 µV	A		3060	6 1.5 V DC
Dolby level	Cass.	SBC419			3605	11 445 mV
					3505	10 445 mV

1 Connect R=15k between 1 and 2 IC6050 measurment between 11-15 (≤225 mV DC)

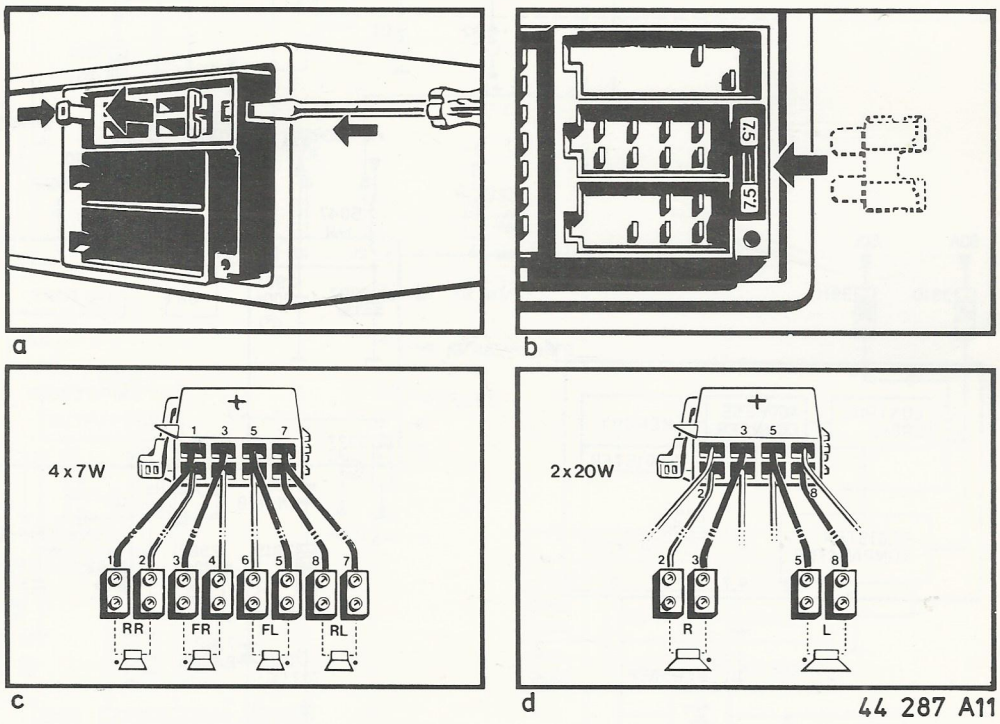

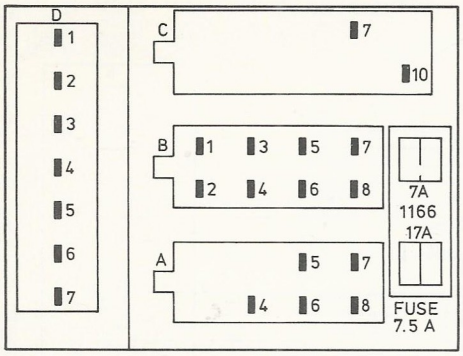

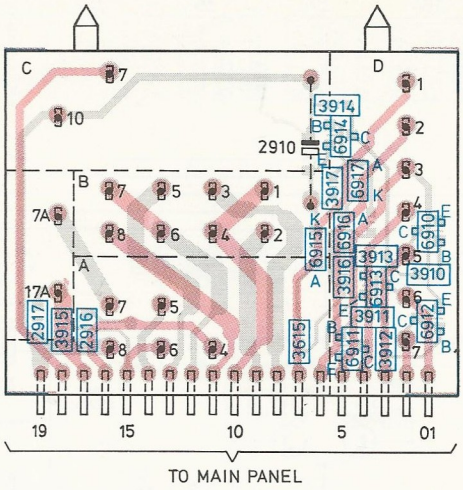

01 = L FRONT
02 = L REAR
03 = R REAR
04 = R FRONT
05 = GND
06 = FADER ENABLE
} LINE OUT
07 = REMOTE VOLTAGE
08 = +RFR
09 = −RRE
10 = −RFR/+RRE
11 = −LRE
12 = −LFR/+LRE
13 = +LFR
}
14 = AUT. AERIAL
15 = EXT. ILLUM.
16 = +14.4V DIRECT
17 = +14.4V SWITCHED
18 = REMOTE SEARCH
19 = GND

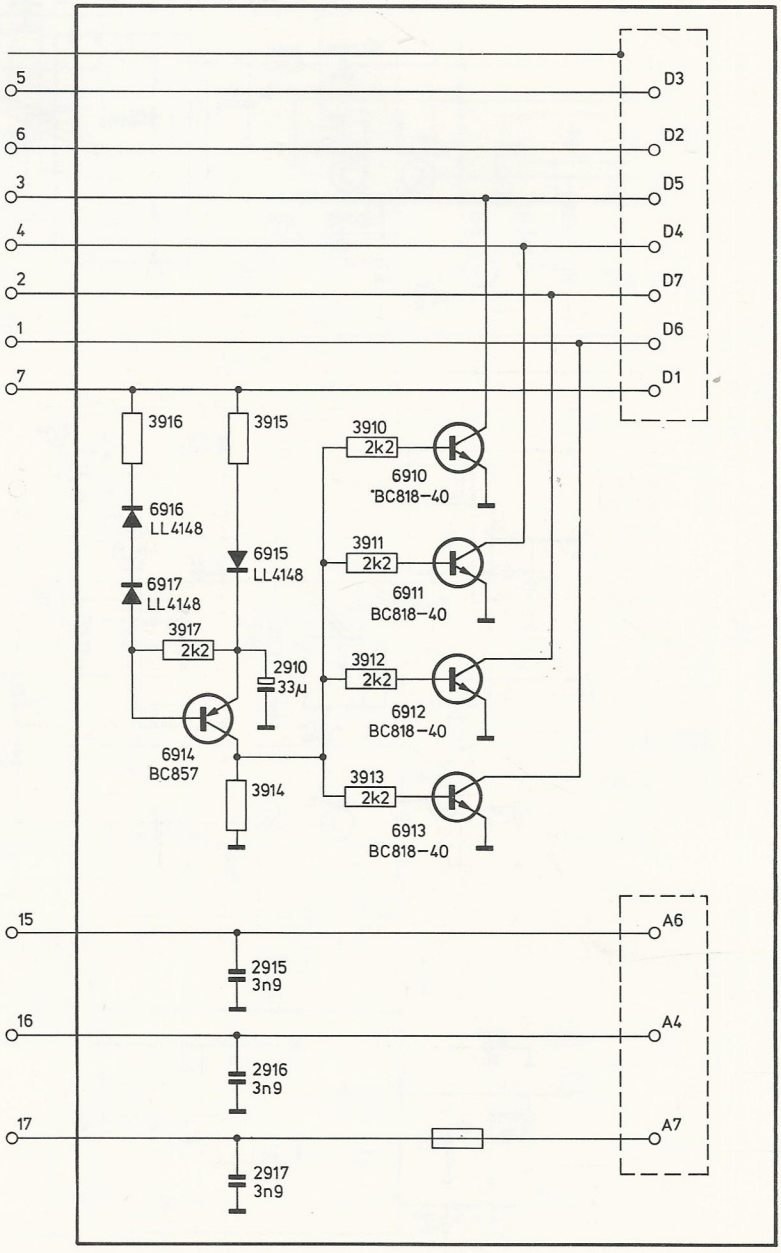

44 394 C11

	4822 100 20166	Trimmer 10K
	4822 100 11447	Trimmer 2k2

	4822 124 41673	1000 µF 10V
	4822 124 21681	2200 µF 16V

5024	4822 156 11081	Detector coil
5043-5045	4822 157 50975	1000µH
5046	4822 152 20681	Choke 160µH
5064	4822 156 21438	Filter LPF-V10
5065	4822 156 21438	Filter LPF-V10

	4822 130 30621	1N4148
	5322 130 31928	BAS16
	4822 130 34233	reference BZX79C5V1
	4822 130 30841	1N4150
	5322 130 30684	1N4002
	4822 130 81129	IS1885
	5322 130 31504	Reference BZX79C3V3
	4822 130 31983	BAT85

	4822 130 44196	TBC548C
	4822 130 61182	TBC558C
	4822 130 61402	TBC547C
	4822 130 60511	BC847B
	4822 130 40995	BD438

	4822 209 72894	TDA1516Q/N5
	4822 209 72227	L4916
	4822 209 72042	MC78LO5ACP
	4822 209 72252	L4904
	4822 209 72251	TEA6100
	4822 209 72889	TMP42C70M/RC3
	4822 209 82116	TA7705P
	4822 209 83159	LA2000
	4822 209 72892	TEA6310T/V2
	4822 209 73313	X2402
	4822 209 72893	PCF8566T
	4822 209 73831	TMP47C800N
	4822 209 72248	TSA6057/C5

MISCELLANEOUS

	4822 134 40855	Lamp 14.4V 40mA
1100	4822 210 10305	Tuner FM
1101	4822 210 10337	Tuner AM stereo
1102	4822 214 51676	IAC THI-FI
1110	4822 130 90624	LCD display
1115	4822 242 71874	Crystal 4MHz
1116	4822 242 71874	Crystal 4MHz
1117	4822 252 51089	Fuse 7.5A
1124	4822 242 70877	Ceram. filter
1129	4822 242 70938	Crystal 32-768KHz
1134	4822 214 51698	Dolby THI-Fi
1135	4822 214 51677	Stereo-dec THI-FI

© Chips 50 V NP0 S1206		
1 pF	5%	4822 122 32479
1,2 pF	5%	4822 122 33013
1,5 pF	5%	4822 122 31792
1,8 pF	5%	4822 122 32087
2,2 pF	5%	4822 122 32425
3,3 pF	5%	4822 122 32079
3,9 pF	5%	4822 122 32081
4,7 pF	5%	4822 122 32082
5,6 pF	5%	4822 122 32506
6,8 pF	5%	4822 122 32507
8,2 pF	5%	4822 122 32083
10 pF	5%	4822 122 31971
12 pF	5%	4822 122 32139
15 pF	5%	4822 122 32504
18 pF	5%	4822 122 31769
22 pF	10%	4822 122 31837
27 pF	5%	4822 122 31966
33 pF	5%	4822 122 31756
39 pF	5%	4822 122 31972
47 pF	5%	4822 122 31772
56 pF	5%	4822 122 31774
68 pF	5%	4822 122 31961
82 pF	10%	4822 122 31839
100 pF	5%	4822 122 31765
120 pF	5%	4822 122 31766
150 pF	5%	4822 122 31767
180 pF	2%	4822 122 31794
220 pF	5%	4822 122 31965
270 pF	5%	4822 122 32142
330 pF	10%	4822 122 31642
390 pF	5%	4822 122 31771
470 pF	5%	4822 122 31727
560 pF	5%	4822 122 31773
680 pF	5%	4822 122 31775
820 pF	5%	4822 122 31974
1 nF	10%	5322 122 31647
1,2 nF	5%	4822 122 31807
1,5 nF	10%	4822 122 31781
1,8 nF	10%	4822 122 32153
2,2 nF	10%	4822 122 31644
2,7 nF	10%	4822 122 31783
3,3 nF	10%	4822 122 31969
3,9 nF	10%	4822 122 32566
4,7 nF	10%	4822 122 31784
5,6 nF	10%	4822 122 31916
6,8 nF	10%	4822 122 31976
10 nF	10%	4822 122 31728
12 nF	10%	5322 122 31648
15 nF	10%	4822 122 31782
18 nF	10%	4822 122 31759
22 nF	10%	4822 122 31797
27 nF	10%	4822 122 32541
33 nF	10%	4822 122 31981
47 nF	10%	4822 122 32542
56 nF	10%	4822 122 32183
100 nF	10%	4822 122 31947
180 nF	10%	4822 122 32915
220 nF	20%	4822 122 32715

© Chips 0,125 W S1206 NP0		
0 E	jumper	4822 111 90163
1 E	5%	4822 111 90184
1,1 E	5%	4822 111 90377
1,2 E	5%	4822 111 90378
1,3 E	5%	4822 111 90379
1,5 E	5%	4822 111 90381
1,6 E	5%	4822 111 90382
1,8 E	5%	4822 111 90383
2 E	5%	4822 111 90384
2,2 E	5%	5322 111 90104
2,4 E	5%	4822 111 90385
2,7 E	5%	4822 111 90386
3 E	5%	4822 111 90387
3,3 E	5%	4822 111 90388
3,6 E	5%	4822 111 90389
3,9 E	5%	4822 111 90391
4,3 E	5%	4822 111 90392

© Chips 0,125 W S1206		
4,7 E	5%	5322 111 90376
5,1 E	5%	4822 111 90393
5,6 E	5%	4822 111 90394
6,2 E	5%	4822 111 90395
6,8 E	5%	4822 111 90254
7,5 E	5%	4822 111 90396
8,2 E	5%	4822 111 90397
9,1 E	5%	4822 111 90398
10 E	2%	5322 111 90095
11 E	2%	4822 111 90338
12 E	2%	4822 111 90341
13 E	2%	4822 111 90343
15 E	2%	4822 111 90344
16 E	2%	4822 111 90347
18 E	2%	5322 111 90139
20 E	2%	4822 111 90352
22 E	2%	4822 111 90186
24 E	2%	4822 111 90355
27 E	2%	5322 111 90105
30 E	2%	4822 111 90356
33 E	2%	4822 111 90357
36 E	2%	4822 111 90359
39 E	2%	4822 111 90361
43 E	2%	5322 116 90125
47 E	2%	4822 111 90217
51 E	2%	4822 111 90365
56 E	2%	4822 111 90239
62 E	2%	4822 111 90367
68 E	2%	4822 111 90203
75 E	2%	4822 111 90371
82 E	2%	4822 111 90124
91 E	2%	4822 111 90375
100 E	2%	5322 111 90091
110 E	2%	4822 111 90335
120 E	2%	4822 111 90339
130 E	2%	4822 111 90164
150 E	2%	5322 111 90098
160 E	2%	4822 111 90345
180 E	2%	5322 111 90242
200 E	2%	4822 111 90348
220 E	2%	4822 111 90178
240 E	2%	4822 111 90353
270 E	2%	4822 111 90154
300 E	2%	4822 111 90156
330 E	2%	5322 111 90106
360 E	1%	4822 111 90288
360 E	2%	4822 111 90358
390 E	2%	5322 111 90138
430 E	2%	4822 111 90362
470 E	2%	5322 111 90109
510 E	2%	4822 111 90245
560 E	2%	5322 111 90113
620 E	2%	4822 111 90366
680 E	2%	4822 111 90162
750 E	2%	5322 111 90306
820 E	2%	4822 111 90171
910 E	2%	4822 111 90372
1 k	2%	5322 111 90092
1,1 k	2%	4822 111 90336
1,2 k	2%	5322 111 90096
1,3 k	2%	4822 111 90244
1,5 k	2%	4822 111 90151
1,6 k	2%	5322 111 90265
1,8 k	2%	5322 111 90101
2 k	2%	4822 111 90165
2,2 k	2%	4822 111 90248
2,4 k	2%	4822 111 90289
2,7 k	2%	4822 111 90569
3 k	2%	4822 111 90198
3,3 k	2%	4822 111 90157
3,6 k	2%	5322 111 90107
3,9 k	2%	4822 111 90571
4,3 k	2%	4822 111 90167
4,7 k	2%	5322 111 90111
5,1 k	2%	5322 111 90268
5,6 k	2%	4822 111 90572
6,2 k	2%	4822 111 90545

© Chips 0,125 W S1206			1U
6,8 k	2%	4822 111 90544	
7,5 k	2%	4822 111 90276	
8,2 k	2%	5322 111 90118	
9,1 k	2%	4822 111 90373	
10 k	2%	4822 111 90249	
11 k	2%	4822 111 90337	
12 k	2%	4822 111 90253	
13 k	2%	4822 111 90509	
15 k	2%	4822 111 90196	
16 k	2%	4822 111 90346	
18 k	2%	4822 111 90238	
20 k	2%	4822 111 90349	
22 k	2%	4822 111 90251	
24 k	2%	4822 111 90512	
27 k	2%	4822 111 90542	
30 k	2%	4822 111 90216	
33 k	2%	5322 111 90267	
36 k	2%	4822 111 90514	
39 k	2%	5322 111 90108	
43 k	2%	4822 111 90363	
47 k	2%	4822 111 90543	
51 k	2%	5322 111 90274	
56 k	2%	4822 111 90573	
62 k	2%	5322 111 90275	
68 k	2%	4822 111 90202	
75 k	2%	4822 111 90574	
82 k	2%	4822 111 90575	
91 k	2%	5322 111 90277	
100 k	2%	4822 111 90214	
110 k	2%	5322 111 90269	
120 k	2%	4822 111 90568	
130 k	2%	4822 111 90511	
150 k	2%	5322 111 90099	
160 k	2%	5322 111 90264	
180 k	2%	4822 111 90565	
200 k	2%	4822 111 90351	
220 k	2%	4822 111 90197	
240 k	2%	4822 111 90215	
270 k	2%	4822 111 90302	
300 k	2%	5322 111 90266	
330 k	2%	4822 111 90513	
360 k	2%	4822 111 90515	
390 k	2%	4822 111 90182	
430 k	2%	4822 111 90168	
470 k	2%	4822 111 90161	
510 k	2%	4822 111 90364	
560 k	2%	4822 111 90169	
620 k	2%	4822 111 90213	
680 k	2%	4822 111 90368	
750 k	2%	4822 111 90369	
820 k	2%	4822 111 90205	
910 k	2%	4822 111 90374	
1 M	2%	4822 111 90252	
1,1 M	5%	4822 111 90408	
1,2 M	5%	4822 111 90409	
1,3 M	5%	4822 111 90411	
1,5 M	5%	4822 111 90412	
1,6 M	5%	4822 111 90413	
1,8 M	5%	4822 111 90414	
2 M	5%	4822 111 90415	
2,2 M	5%	4822 111 90185	
2,4 M	5%	4822 111 90416	
2,7 M	5%	4822 111 90417	
3 M	5%	4822 111 90418	
3,3 M	5%	4822 111 90191	
3,6 M	5%	4822 111 90419	
3,9 M	5%	4822 111 90421	
4,3 M	5%	4822 111 90422	
4,7 M	5%	4822 111 90423	
5,1 M	5%	4822 111 90424	
5,6 M	5%	4822 111 90425	
6,2 M	5%	4822 111 90426	
6,8 M	5%	4822 111 90235	
7,5 M	5%	4822 111 90427	
8,2 M	5%	4822 111 90237	
9,1 M	5%	4822 111 90428	
10 M	5%	5322 111 91141	

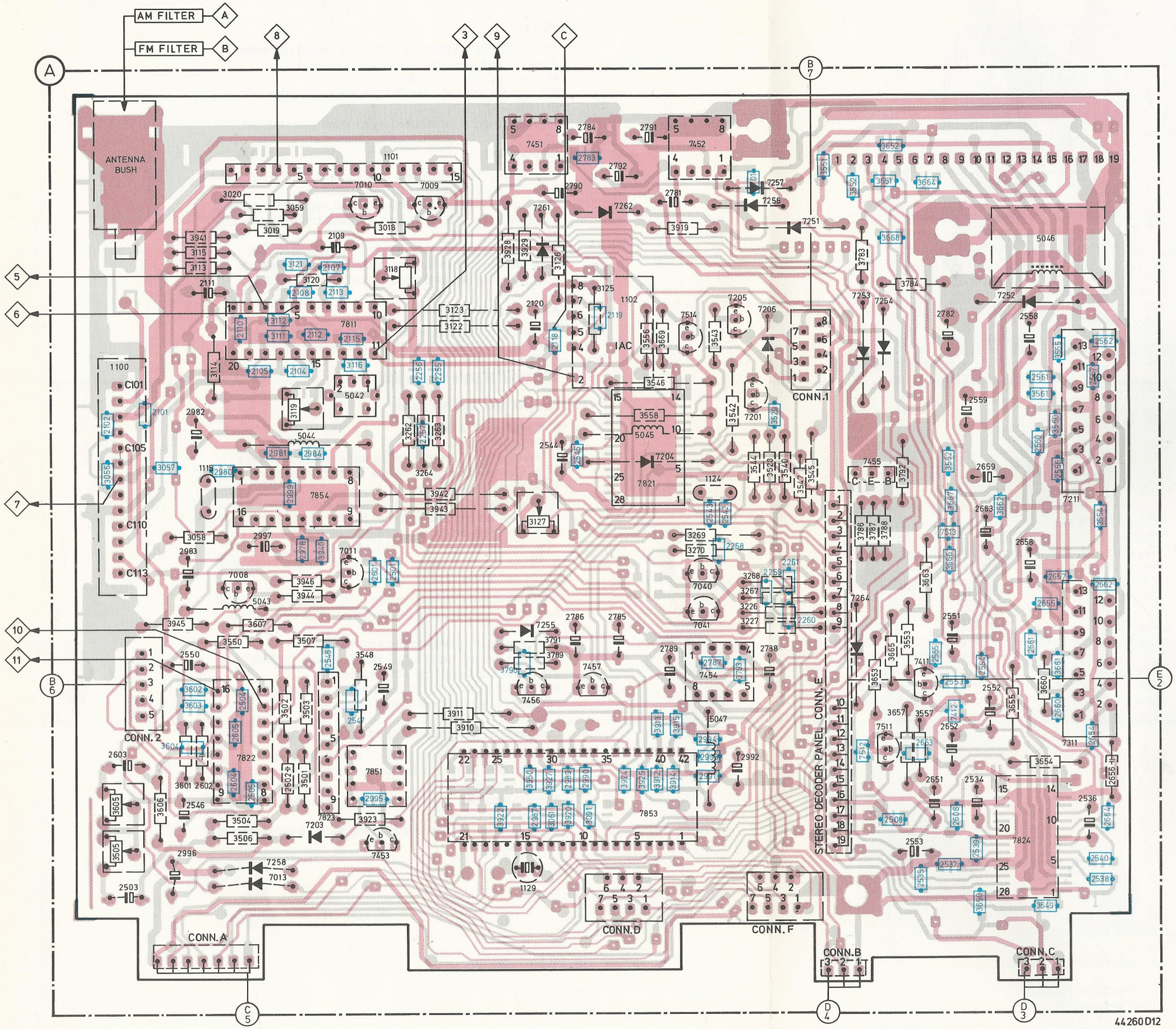
AM FILTER
FM FILTER
ANTENNA BUSH
IAC
CONN.1
STEREO DECODER PANEL CONN.E
CONN. 2
CONN. A
CONN.D
CONN.F
CONN.B
CONN.C
44260D12

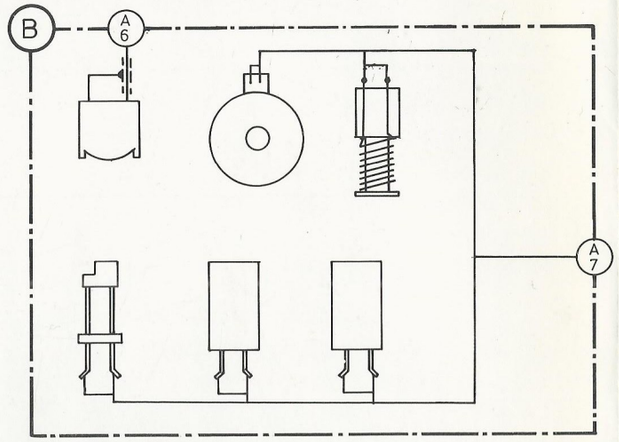

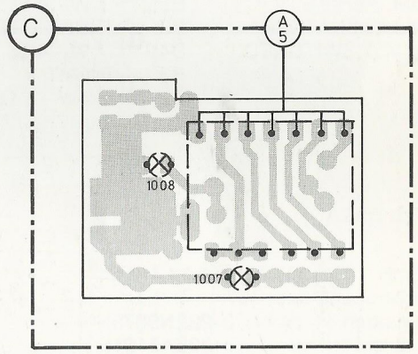

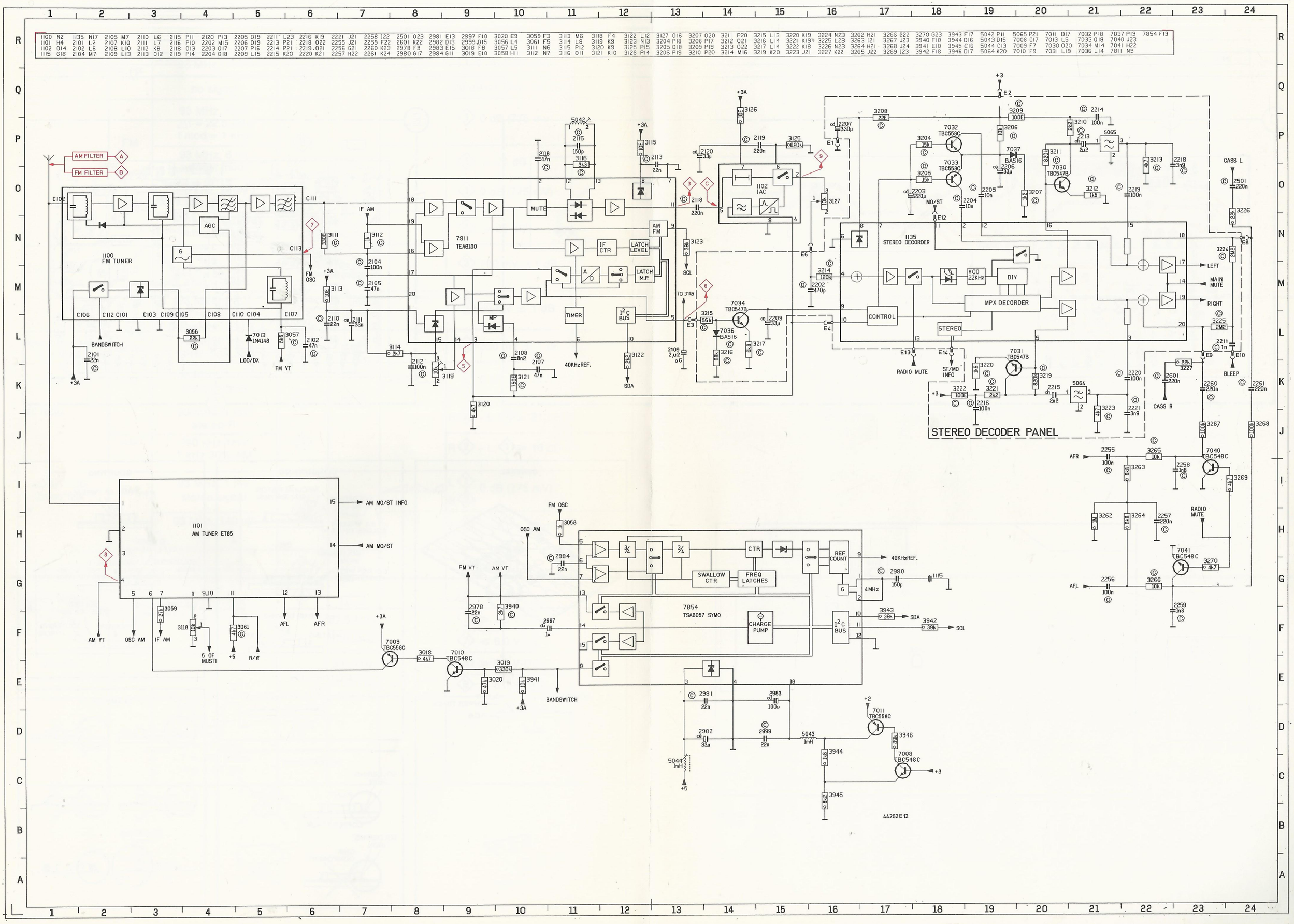
1100 FM TUNER
7811 TEA6100
1102 IAC
1135 STEREO DECORDER
STEREO DECODER PANEL
1101 AM TUNER ET85
7854 TSA6057 SYMO
AM FILTER
FM FILTER
BANDSWITCH
LOC/DX
FM VT
FM OSC
IF AM
MUTE
IF CTR
LATCH LEVEL
LATCH M.P
TIMER
40KHzREF.
SDA
SCL
TO 3118
MO/ST
VCO 22KHz
DIV
MPX DECORDER
CONTROL
STEREO
RADIO MUTE
ST/MO INFO
CASS L
CASS R
LEFT
MAIN MUTE
RIGHT
BLEEP
AFR
AFL
AM MO/ST INFO
AM MO/ST
AM VT
OSC AM
5 OF MUSTI
N/W
SWALLOW CTR
FREQ LATCHES
REF COUNT
4MHz
CHARGE PUMP
44262E12

CS 20 245

| | | |

1000 H6	1003 H5	1006 G5	1116 C8	2988 C7	2991 E6	2994 B10	2998 C7	3902 I6	3911 E2	3914 C10	3920 G13	3924 B12	3928 C9	3951 B10	7261 D6	7851 C3
1001 G6	1004 G5	1007 J18	1129 C7	2989 C8	2992 E5	2995 B4	3091 F7	3903 H6	3912 C10	3915 C11	3922 E14	3925 B13	3929 C9	5047 E6	7262 C6	7853 D7
1002 H5	1005 G5	1008 J18	2987 C6	2990 C8	2993 B11	2996 B3	3900 J6	3910 E2	3913 C10	3919 C6	3923 B12	3927 D5	3950 B9	7258 B2	7453 B9	

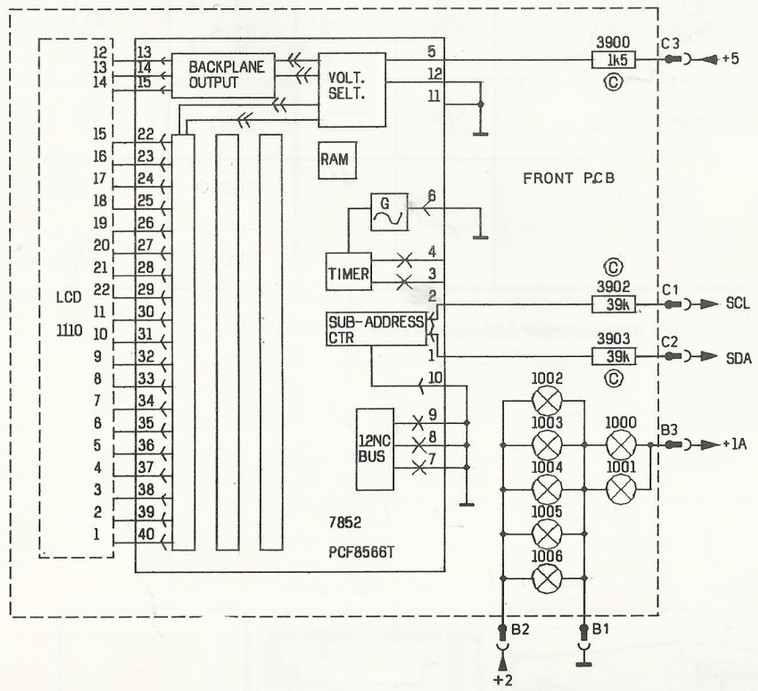

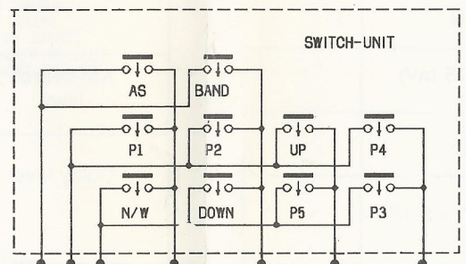

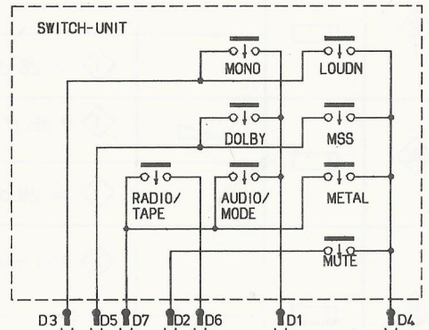

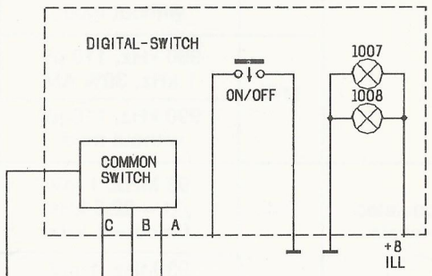

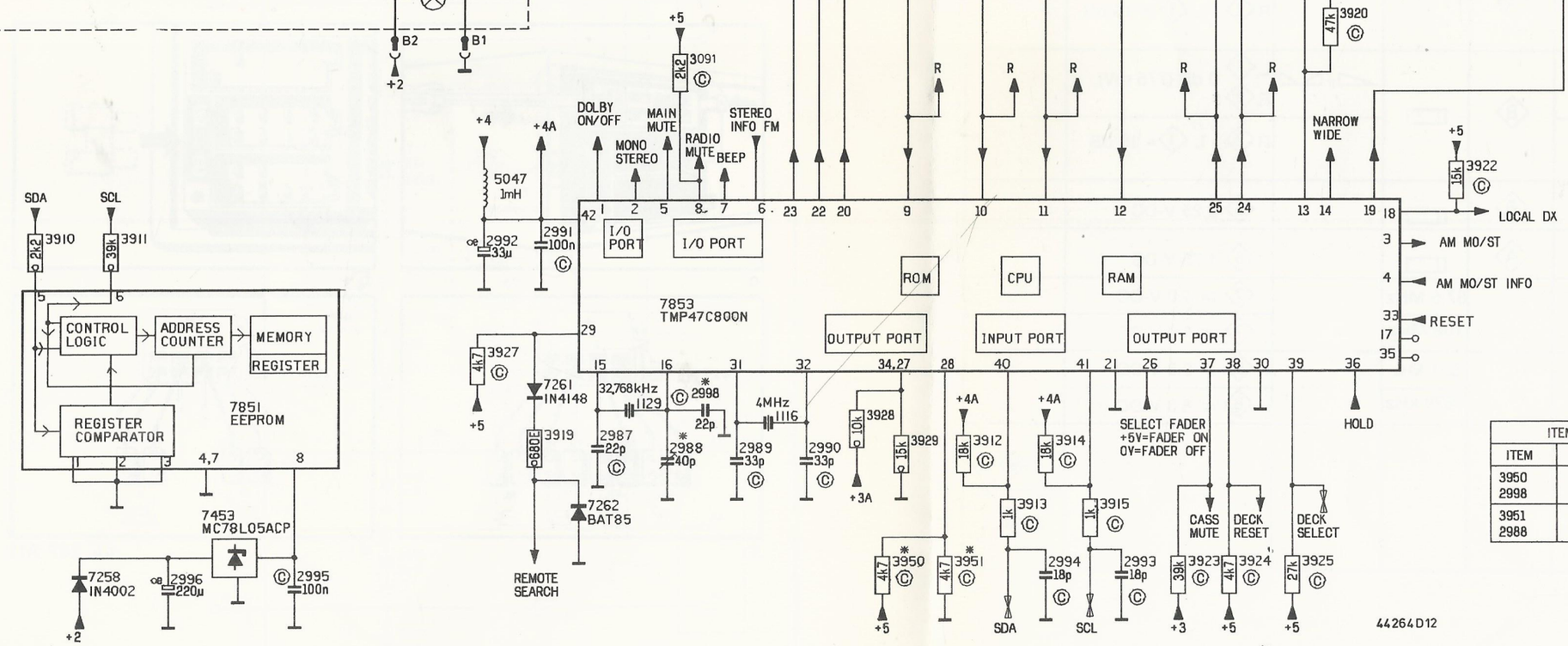

ITEM MARKED ✳		
ITEM	-/00	-/78
3950 2998	AS SHOWN	DELETED
3951 2988	DELETED	AS SHOWN

| | | |
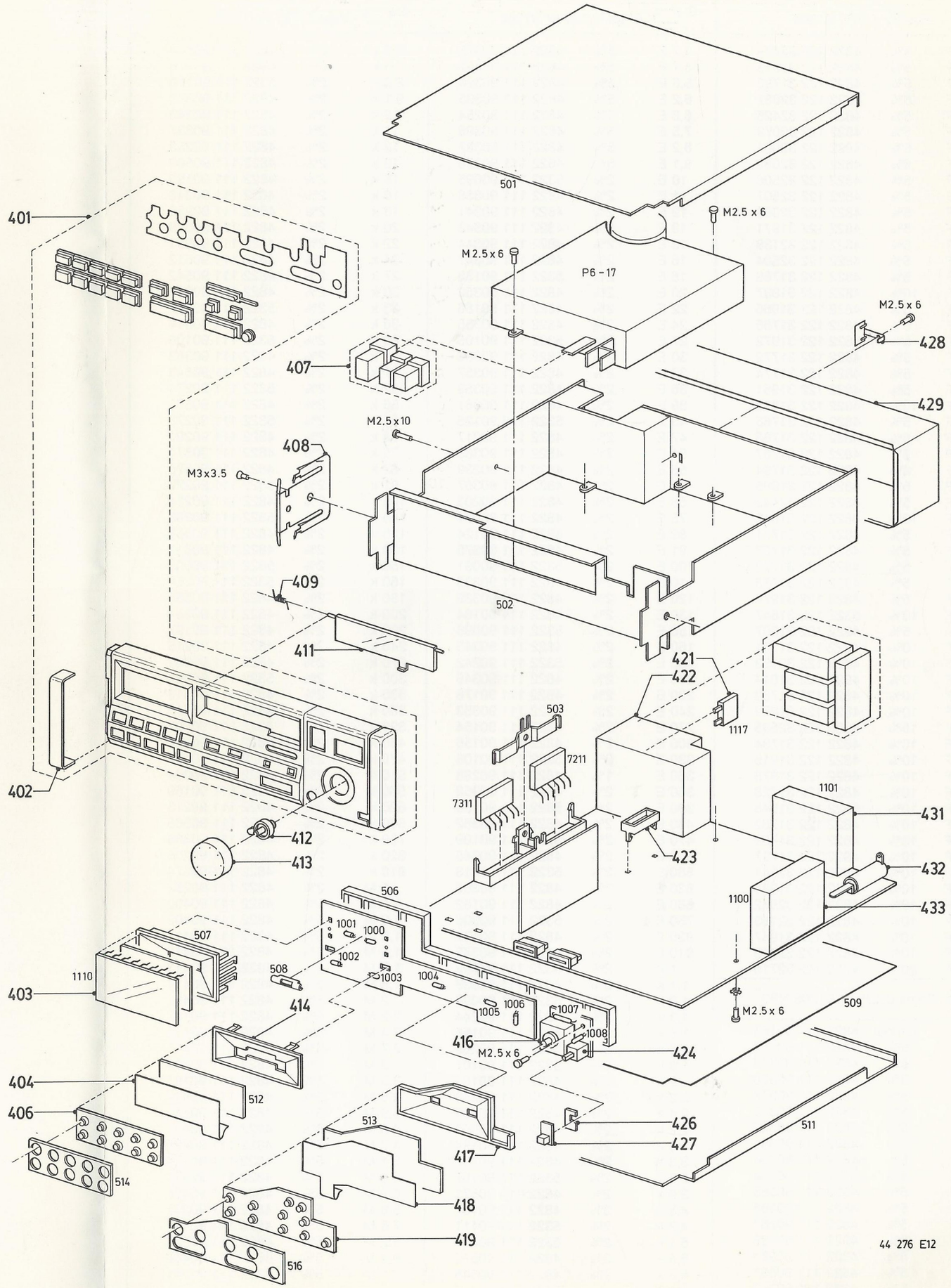
401	4822 454 12242
402	4822 443 62269
403	4822 130 90624
404	4822 454 12241
406	4822 410 26863
407	4822 410 26865
408	4822 492 63822
409	4822 492 42313
411	4822 443 62653
412	4822 404 10776
413	4822 413 41485
414	4822 404 10774
416	4822 276 12405
417	4822 404 10775
418	4822 454 12239
419	4822 410 26864
421	4822 252 51089
422	4822 290 60719
423	4822 404 10773
424	4822 276 11517
426	4822 466 70647
427	4822 410 26862
428	4822 492 70135
429	4822 443 30463
431	4822 210 10337
432	4822 267 30883
433	4822 210 10305