Cassette car radio 90DC610/73

Service
Service
Service

For repair information of the cassette deck see Service Manual of "Car cassette deck P6–17/3".

Service Manual

12 V

Table of contents

Published by Consumer Electronics Printed in The Netherlands Subject to modification 4822 725 23282

1. TECHNICAL SPECIFICATIONS

General

Power supply	: +14.4 VDC
Fuse	: 5A
Dimensions (wxhxd)	: 180x51x152 mm

Radio

FM wave range	: 87.5 - 108 MHz
AM wave range	: 531 - 1629 kHz
FM tuning grid	: 100 kHz
AM tuning grid	: 9 kHz
IF-FM	: 10.7 MHz
IF-AM	: 10.7 MHz
FM sensitivity for 30 dB S/N	: ≤ 7 μV
AM sensitivity for 26 dB S/N	: ≤ 100 μV
α – 3 dB limiting point	: 10 μV ± 3 μV
10 dB crosstalk	: 140 μV ± 50 μV

Cassette player P6-17/3

Number of tracks	: 2 x 2 (auto reverse)
Tape speed	: 4.76 cm/sec. ± 2%
Wow and Flutter	: ≤ 0.3 %
Crosstalk	: ≥ 30 dB

Amplifier

Output power (D ≤ 10%)	: 4 x 5.5W ± 1 dB/4Ω
Bass	: + 20 dB - 15 dB at 40 Hz
Treble	: +/- 12 dB at 10 kHz
Loudness	: + 6 dB at 125 Hz *)

*) automatic, volume/bass dependent

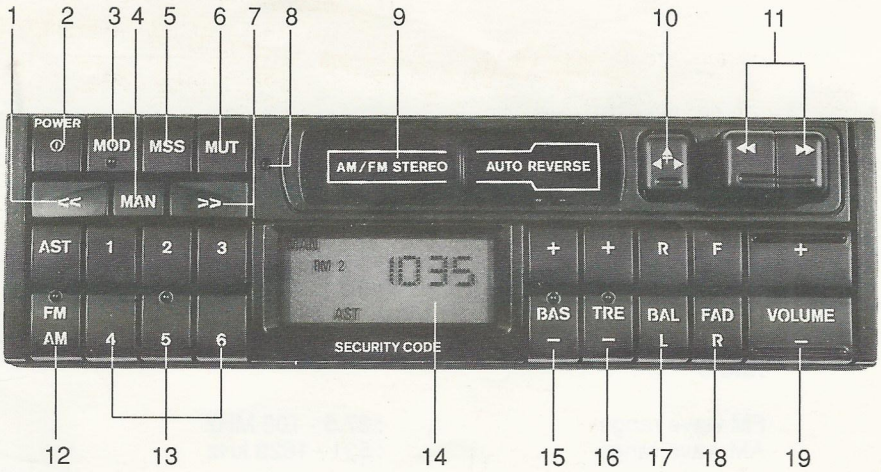

2.1 EXPLANATIONS OF CONTROLS

1 Tune down, Security Code digit select
2 Power on/off
3 Mode select (Radio/Tape)
4 Manual tuning
Local/Distant (LO/DX)
5 MSS, Music Search System
6 Mute
7 Tune up, Security Code digit select
8 Reset
9 Tape deck compartment
10 Reverse/eject
11 FRW/FFW
12 FM/AM band select, Autostore (AST)
13 Preset 1-6 select/store
(preset 1 also Security Code enter key)
14 Liquid Cristal Display (LCD)
15 Bass control
16 Treble control
17 Balance Left/Right
18 Fader Front/Rear
19 Volume up/down

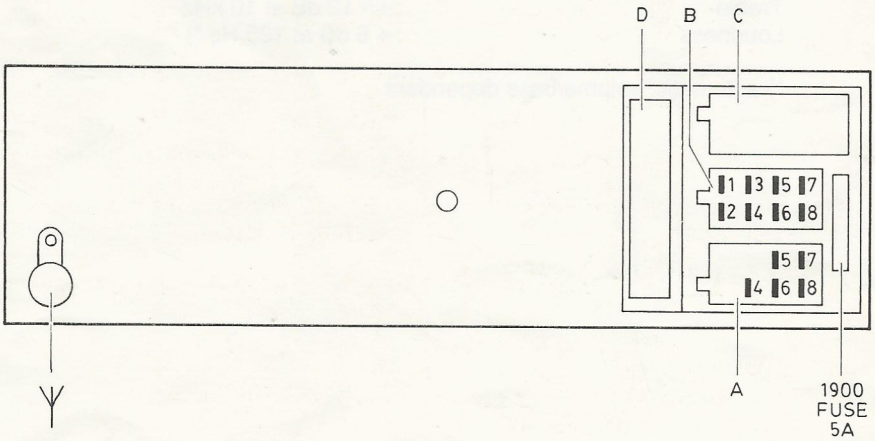

2.2 EXPLANATION OF CONNECTIONS

A4: Ignition plus (+ 14.4V)
A5: Remote on/off (TTL logic only)
A6: Two level illumination ("low" = 100% ill.)
("high" = 70% ill.)
A7: Main supply permanent (+ 14.4V)
A8: Supply ground

B1: Speaker Right Rear
B2: Speaker RR return
B3: Speaker Right Front
B4: Speaker RF return
B5: Speaker Left Front
B6: Speaker LF return
B7: Speaker Left Rear
B8: Speaker LR return

3.1 ESD

All IC's and many other semiconductors are susceptible to electrostatic discharges (ESD).
Careless handling during repair can reduce life drastically. When repairing, make sure that you are connected to the same potential as the mass of the set via a wrist wrap with resistance. Keep components and tools also at this potential.

3.2 SERVICE TEST PROGRAMME

The test can be called without first entering the Security Code.

Display test

The display test is called as follows:

- Press the "AST" button **while** switching on the set a **keep it pressed** until a "P" appears in the LCD.
- Press preset 3 until "P" disappears from the LCD.

All segments are turned on and the display remains static (see Fig.1). The test can be terminated by switching off the set.

Fig. 1

3.3 INSTRUCTIONS FOR USE

SECURITY CODE

Introduction

To reduce the risk of theft, the factory has provided this car radio with a specific four digit Security Code.
If the Security Code has been activated and the power supply is interrupted, the radio will not operate until the **correct** code has been entered.
If an **incorrect** code is entered, a warning tone will be heard and the radio mutes. A 'waiting period' of 1 minute then follows. Another code (even the correct code) can not be entered until the waiting period is over. During and after the waiting period the radio is muted.
Each time an incorrect code is entered, the waiting period is doubled (2 min., 4 min., 8 min., 16 min. etc.). If the radio is switched off before the end of the waiting period, the same period will start all over again at the moment the radio is switched on.

Activating the Security Code

- While keeping the >> button pressed, switch on the radio, and keep the >> button pressed until a beep is heard.

The Security Code is now active. The display briefly shows 'CODE' each time the radio is switched on.

Entering the Security Code

- Switch on the set.
- Press preset 1
- Select the first digit using >> or << button.
- Press preset 1 button to enter the first digit.
- Repeat the process (except for 'power on') until all 4 digits of the Security Code are entered.

Example: Assume the Security Code is **"7349"**

Action	Display
Switch on the set	C O D E
Press P1	–
Select **first** digit with >> or <<	**7**
Press P1	7 –
Select **second** digit with >> or <<	7 **3**
Press P1	7 3 –
Select **third** digit with >> or <<	7 3 **4**
Press P1	7 3 4 –
Select **fourth** digit with >> or <<	7 3 4 **9**
Press P1	

If the **correct code** was entered, you will hear a confirmation beep and the radio will function normally.

If however an **incorrect code** had been entered, you will hear a warning tone. The display shows 'Err' flashing. You must now wait for 1 minute before another code can be entered.

During this waiting period the radio refuses all codes, even the correct code.

Do not switch off the radio during the waiting period! The waiting time will start all over again when the set is switched on.

After the waiting period is over the display shows 'CODE'. The correct code can then be entered (as described above).

Deactivating the Security Code

- While keeping the >> button pressed, switch on the radio, and **keep the >> button pressed** until the display shows 'CODE'.
- Enter the code using the >> or << buttons and preset 1 button as described in 'Entering the code'.

Two beeps will be heard, indicating that the Security Code is now deactivated.

SOUND ADJUSTMENT

Volume, Fader (front/rear control), Balance, Treble and Bass are adjusted separately.
The Bass and Treble settings for AM, FM and cassette operation are stored independently!

RADIO RECEPTION

- To select FM1, FM2, FM3-AST, AM1 or AM2-AST, briefly press the AM/FM key one or more times.

The display shows the selected waveband.

Tuning to a station

You can tune to a radio station using any of the following methods:

– Search tuning
– Manual tuning
– Auto-Store
– Recalling a preset

Search tuning

You can quickly search for a station upwards or downwards in frequency.

- Select the desired waveband with the AM/FM key.
- Briefly press the << or the >> button.

You will receive a station after a short time.

- Press the same button again.

You will receive the next station in the direction of the search.

When the highest frequency (e.g. for FM: 108 MHz) is reached the tuning switches automatically to the lowest frequency (for FM: 87.5 MHz) and vice versa.

Search tuning occurs on two different 'sensitivity levels'. First the radio searches for strong stations. If no station is found after the whole waveband has been scanned, the radio will search for less-strong stations.

If the radio tunes to a station which has been stored on one of the presets, the display will also show the relevant preset number.

Manual tuning

- Switch from search tuning mode to manual tuning mode by briefly pressing the MAN key.

The display shows MAN

- Select the desired frequency with the << or >> key.

Keeping the button pressed changes the frequency quickly. Briefly pressing the button changes the frequency by one step (100 kHz on FM or 9 kHz on AM).

You can switch back to search tuning by briefly pressing the MAN key again.

note:

When the set is turned off and on again, it always returns to search tuning.

LOCAL/DISTANT (LO/DX)

You can set the desired search sensitivity (local or distant) to determine whether or not the radio accepts weaker stations during search tuning.

To switch to local (LO) sensitivity:

- Press the MAN key for longer than 2 seconds.

The display shows 'LO' and only local stations can now be found with search tuning.

To switch back to distant (DX) sensitivity:

- Press the MAN key for longer than 2 seconds.

The 'LO' indication disappears from the display and all receivable stations can now be found with search tuning.

note:

When the set is switched off and then on again, it always returns to **distant** mode.

AUTO-STORE

Auto-Store is an automatic search tuning system which stores the six strongest stations on the FM3-AST or AM2-AST preset bank.

note:

When AST is activated, the new stations **replace** any stations previously stored on the presets on FM3 or AM2 band.

Storing stations:

- Select FM or AM with the AM/FM key
- Keep the AST key pressed until a beep is heard

The radio mutes, and automatically selects FM3-AST or AM2-AST respectively. The display shows 'AST' flashing and the frequency indication disappears.
The waveband is scanned and the six strongest stations are automatically stored on the six presets.
The radio gives a beep when it has finished storing the stations.

– The radio then switches to the Auto-Store station on preset 1.
– You can select the Auto-Store stations with the presets 1-6.

The display shows the frequency and the Auto-Store preset number.

Recalling Auto-Store stations

- Select FM3-AST or AM2-AST with the AM/FM key.
- Select Auto-Store stations using the presets 1-6.

To leave the Auto-Store mode, press the AM/FM selector.

Note:

If under certain circumstances it is not possible for the radio to find six stations, the remaining presets (e.g. 5 and 6) are programmed with '000'. If you later select such a preset the radio will mute.

PRESETS

You can store stations on **each** waveband FM1, FM2, FM3-AST, AM1 and AM2-AST on the preset buttons 1-6.

Storing stations:

- Select the desired waveband with the AM/FM key.
- Tune-in the desired station using the << or >> buttons.
- Keep the desired preset (e.g. 1) pressed until a beep indicates that the frequency has been stored.

The display shows the waveband, the frequency and the preset number on which the station has been stored.

Recalling stations

- Select the desired waveband with the AM/FM key.
- Briefly press the relevant preset 1-6.

4.1 RESETTING THE SYSTEM

This set is designed to perform according to specifications under most circumstances and situations. However, if the set does not respond to any key pressed, it is advised to reset the system as follows,

- Use a pen or any object with a pointed tip to press the RESET button.

The set will then switch off when the reset button is released.

- To switch on the set, press the POWER switch again.

4.2 TEMPORARY SECURITY CODE BYPASS

To enable the set to be operational for test purposes although the Security Code is activated, a temporary bypass of the Security Code is allowed for four (4) minutes.

In this mode the set will function normally except the display is flashing as an indication.
After the four (4) minutes the set will switch off automatically.

To activate this test mode:

- Press the AM/FM key **while** switching on the set until a 'P' appears in the display.
- Press preset 3 until the 'P' disappears from the LCD.

This test mode can be prematurely terminated by switching off the set.

4.3 SECURITY CODE DATABASE

In case a set is brought in for repair with the Security Code still activated and the customer can not be contacted or has forgotten the Security Code, there is still a way to trace back the Security Code.
All Security Codes are kept in a central database which can be accessed by authorized people only. Kindly check with your local organization whom is authorised to access the system and provide the full engraved number which is found on the side bracket of the set.

4.4 HANDLING CHIP COMPONENTS

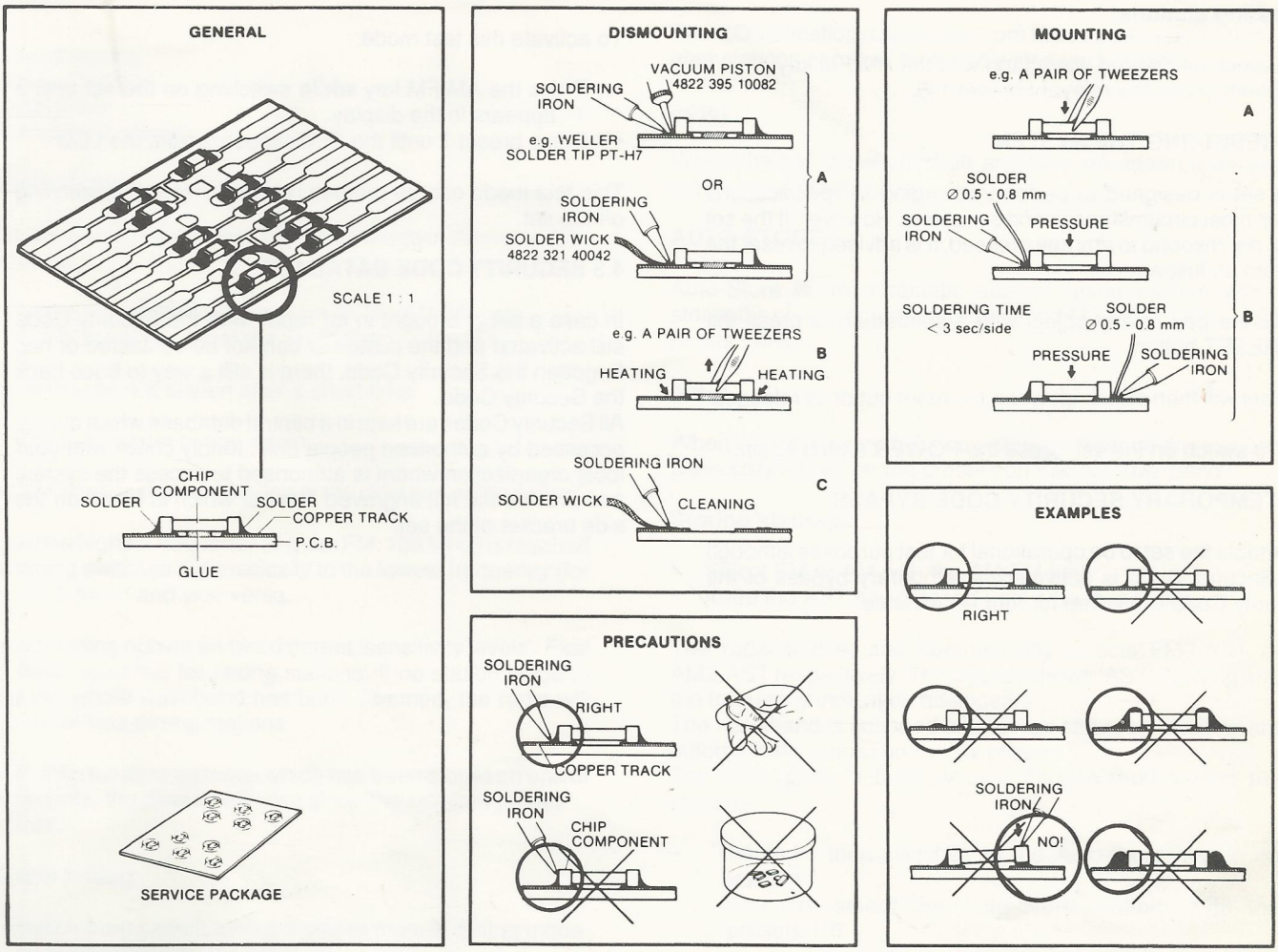

4.5 SURVEY OF SYMBOLS

Carbon film 0.2 W CR16	70°C	5%	
Carbon film 0.33 W CR25	70°C	5%	
Carbon film 0.5 W CR37	70°C	5%	
Standard film 0.5 W SFR16T	70°C	5%	
Standard film 0.4 W SFR25	70°C	5%	
Metal film 0.6 W MRS25	70°C	5%	
Safety resistor			
Chip jumper 0E			
(C) Chip component			

Plate ceramic Tuning < 120 pF		2%
Others		—20/+80%
Tubular ceramic		
Polystyrene film / foil		1%
Polyestor Film / foil		10%
Mylar		10%
Electrolytic		

* a	= 2,5 V
b	= 4 V
c	= 6,3 V
d	= 10 V
e	= 16 V
f	= 25 V
g	= 40 V
h	= 63 V
j	= 100 V
l	= 125 V
m	= 150 V
n	= 160 V
q	= 200 V
r	= 250 V
s	= 300 V
t	= 350 V
u	= 400 V
v	= 500 V
w	= 630 V
x	= 1000 V
A	= 1,6 V
B	= 6 V
C	= 12 V
D	= 15 V
E	= 20 V
F	= 35 V
G	= 50 V
H	= 75 V
I	= 80 V

5.1 CONNECTOR BLOCK

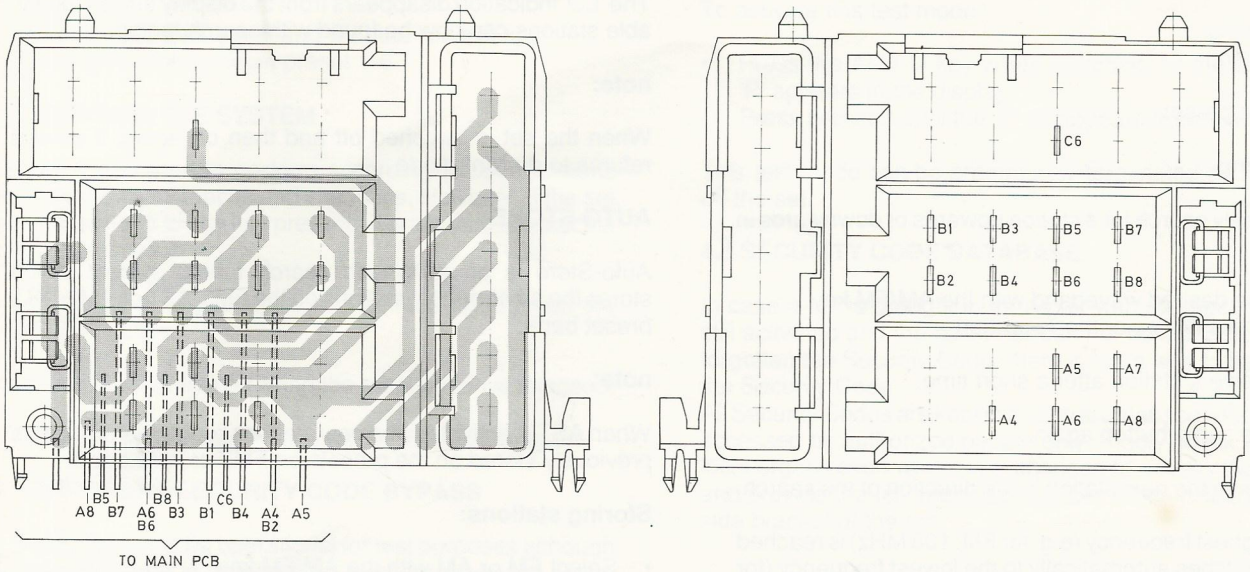

5.2 FRONT PANEL

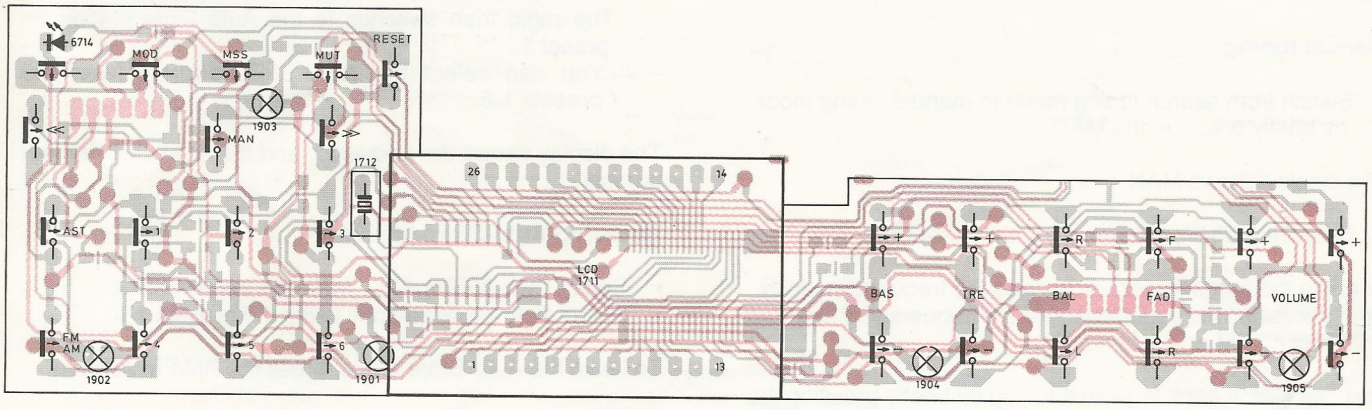

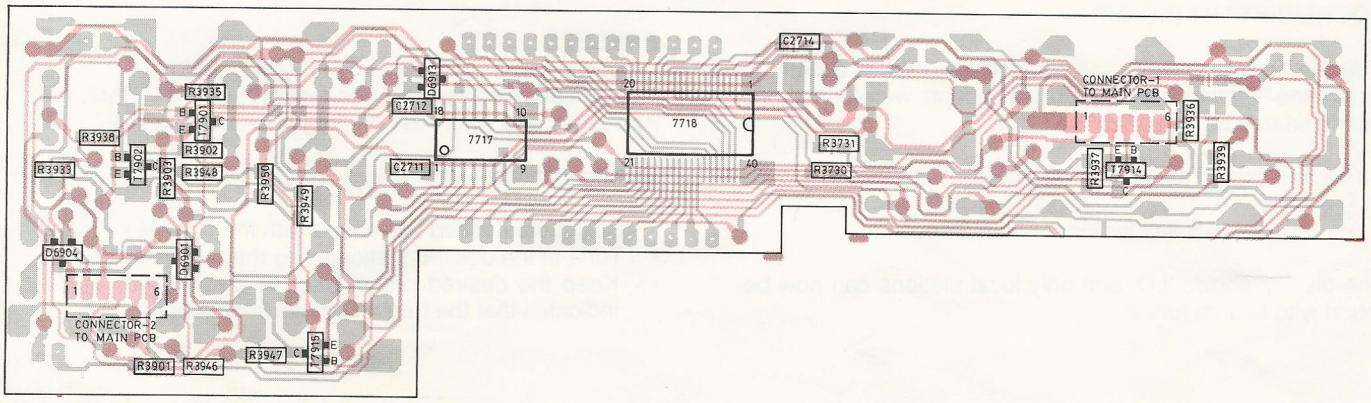

5.3 MAIN PANEL (NON-CHIP)

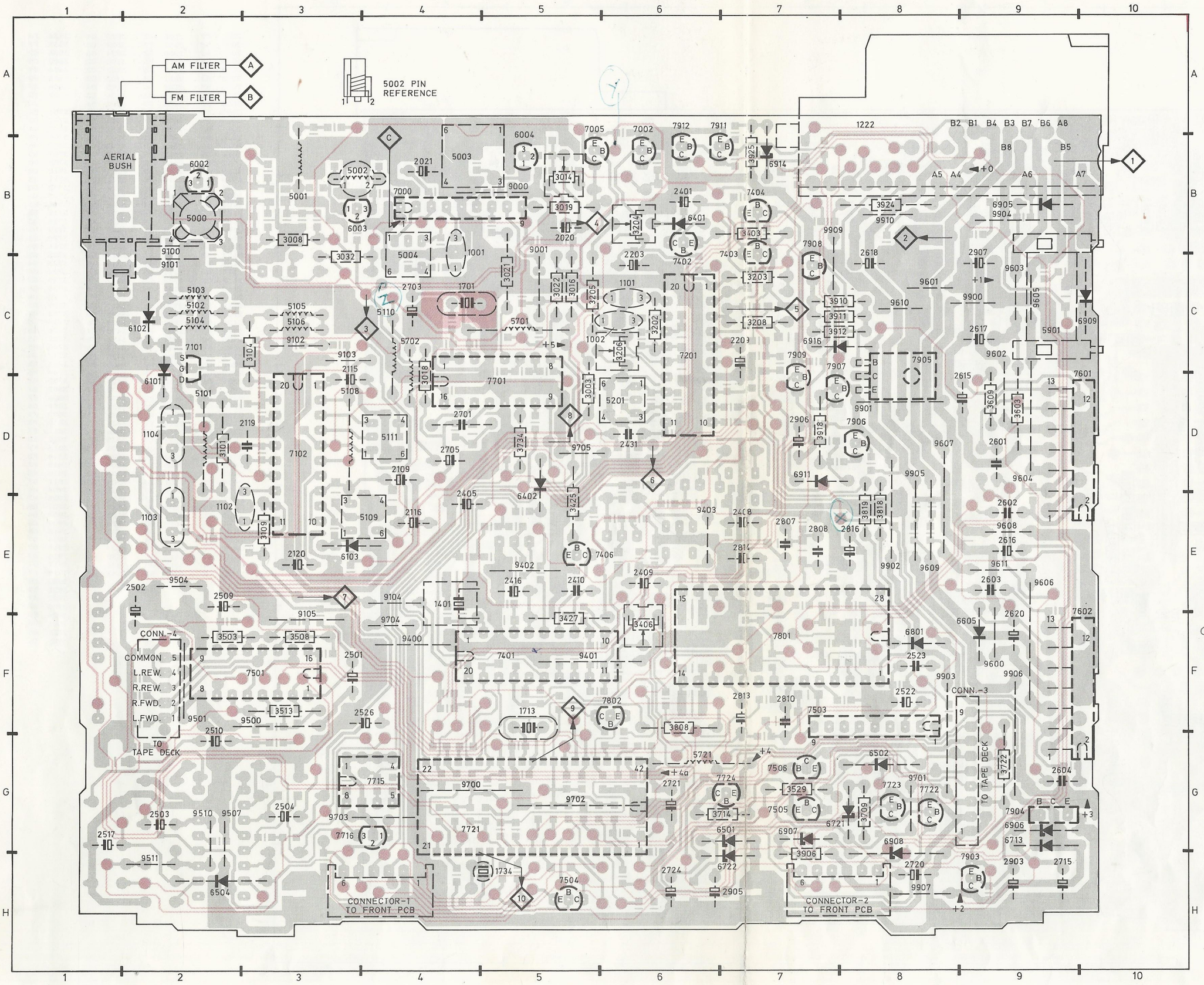

1001	B4	2905	H6	5201	D6	7907	D7
1002	C6	2906	D7	5701	C5	7908	C7
1101	C6	2907	C9	5702	C4	7909	C7
1102	E2	3003	D5	5721	G6	7911	B6
1103	E2	3008	B3	5901	C9	7912	B6
1104	D2	3014	B5	6002	B2	9000	B5
1222	B8	3016	C5	6003	B3	9001	C5
1401	E4	3018	C4	6004	B5	9100	B2
1701	C4	3019	B5	6101	C2	9101	C2
1713	F5	3021	C5	6102	C2	9102	C3
1734	H5	3022	C5	6103	E3	9103	C3
2020	B5	3032	C3	6401	B6	9104	E4
2021	B4	3101	D2	6402	D5	9105	F3
2109	D4	3104	C3	6501	G7	9400	F4
2115	D3	3109	E3	6502	G8	9401	F5
2116	E4	3202	C6	6504	H2	9402	E5
2119	D3	3203	C7	6605	F9	9403	E6
2120	E3	3204	B6	6713	G9	9500	F3
2203	C6	3205	C5	6721	G8	9501	F2
2209	C7	3206	C6	6722	H7	9504	E2
2401	B6	3208	C7	6801	F8	9507	G2
2405	E4	3403	B7	6905	B9	9510	G2
2408	E7	3406	F6	6906	G9	9511	H2
2409	E6	3425	E5	6907	G7	9600	F9
2410	E5	3427	F5	6908	H8	9601	C8
2416	E5	3503	F2	6909	C10	9602	D9
2431	D6	3508	F3	6911	D7	9603	C9
2501	F3	3513	F3	6914	B7	9604	D9
2502	E2	3529	G7	6916	C7	9605	C9
2503	G2	3603	D9	7000	B4	9606	F9
2504	G3	3609	D9	7002	B6	9607	E8
2509	E2	3709	G8	7005	B5	9608	E9
2510	G2	3714	G7	7101	C2	9609	E8
2517	G1	3722	G9	7102	D3	9610	C8
2522	F8	3734	D5	7201	C6	9611	E9
2523	F8	3808	F6	7401	F5	9700	G4
2526	F4	3818	E8	7402	B6	9701	G8
2601	D9	3819	E8	7403	C7	9702	G5
2602	E9	3906	H7	7404	B7	9703	G4
2603	E9	3910	C7	7406	E5	9704	F4
2604	G9	3911	C7	7501	F3	9705	D5
2615	D9	3912	C7	7503	F8	9900	C9
2616	E9	3918	D7	7504	H5	9901	D8
2617	C9	3924	B8	7505	G7	9902	E8
2618	C8	3925	B7	7506	G7	9903	F8
2620	F9	5000	B2	7601	D10	9904	B9
2701	D4	5001	B3	7602	F10	9905	E8
2703	C4	5002	B3	7701	D5	9906	F9
2705	D4	5003	B4	7715	G4	9907	H8
2715	H9	5004	B4	7716	G4	9909	C7
2720	H8	5101	D2	7721	G5	9910	B8
2721	G6	5102	C2	7722	G8		
2724	H6	5103	C2	7723	G8		
2807	E7	5104	C2	7724	G7		
2808	E7	5105	C3	7801	F7		
2810	F7	5106	C3	7802	F6		
2813	F7	5108	D3	7903	H9		
2814	E7	5109	E4	7904	G9		
2816	E8	5110	C4	7905	C8		
2903	H9	5111	D4	7906	D8		

NO SCAN / AUDIO -
CHECK 7005 FOR 8.9V ON
B,C,E. IF NONE LINK FROM
X - Y ALSO FROM Y - Z

... V any position
... V AM position AM
... V FM position FM
... V > position forward play
... V < position reverse play

extension * means signal strength dependent

6002 BB204G

1 = GND
2 = 1V4-6V3 FM
3 = 0 V

6003 BB204G

1 = GND
2 = 1V4-6V3 FM
3 = 0 V

6004 BB204G

1 = 0 V
2 = 7V4
3 = GND

7000 LA1177

1 = 2V8
2 = 8V4
3 = 3V1-7V9*
4 = 2V
5 = GND
6 = 5V
7 = 1V5
8 = 4V5
9 = 8V4

7001 BF992

g1 = 4V3
g2 = 2V2-5V5*
s = 2V3-4V1*
d = 8V5

7002 BC549C

e = GND
b = 0V1
c = 6V7

7005 BC558C

e = 8V9
b = 8V2
c = 8V7

7101 2SK507E

e = 0V
b = GND
c = 8V7

7102 TEA6200

1 = 7V1
2 = 4V
3 = 8V7
4 = 8V7
5 = 8V8
6 = 8V7
7 = 0V6
8 = 4V
9 = 4V
10 = 4V
11 = 7V1
12 = 1V3
13 = 5V2
14 = 8V1
15 = 4V7
16 = 4V7
17 = GND
18 = 1V7
19 = 1V3
20 = 3V2

7201 TEA6100

1 = 8V8
2 = 0V6
3 = 0V5-4V8 FM*
4 = 1V7
5 = 0V2-4V5 AM*
6 = 0V3
7 = GND
8 = 8V9
9 = 4V9 (SCL)
10 = 4V9 (SDA)
11 = 4V3
12 = 4V6
13 = 4V6
14 = 2V5
15 = 4V9
16-20 = 2V9
20 = GND

7401 TDA1591/V2A

1 = 4V
2 = 4V4
3 = GND
4 = 3V
5 = 8V5
6 = 2V2
7 = 0V
8 = 6V4
9 = 3V8
10 = 3V6
11 = 3V8
12 = 3V8
13 = 3V8
14 = 3V8
15 = 1V3-2V8 FM*
3V6 AM*
16 = 2V6
17 = 2V6
18 = 0V
19 = 0V
20 = 3V

7402 BC547

e = 0V1-0V FM*
b = 0V5-0V1 FM*
c = 0V9-5V3 FM*

7403 BC558C

e = 0V9-5V3 FM*
b = 0V5-4V8 FM*
c = GND

7404 BC547

e = 0V4-4V8 FM*
b = 0V9-5V4 FM*
c = 8V9

7406 BC547

e = GND
b = 0V3 FM
0V7 AM
c = 2V2 FM
0V AM

7501 TA7784P

1 = 8V5
2 = 2V8
3 = 5V0 >
0V0 <
4 = NC
5 = 2V2
6 = 2V2
7 = 2V2
8 = GND
9 = 2V2
10 = NC
11 = 2V2
12 = 2V2
13 = 2V2
14 = NC
15 = NC
16 = 2V8

7503 LA2000

1 = 1V9
2 = 8V9
3 = 1V9
4 = NC
5 = GND
6 = 4V9-0V MSS
7 = NC
8 = NC
9 = 8V9

7504 BC547

e = 0V1
4V5 tape mute
b = 0V7
5V tape mute
c = 0V1
4V8 tape mute

7505 BC547

e = GND
b = 0V8 tape mode
0V1 radio mode
c = 0V2 tape mode
13V3 radio mode

7506 BSR50

e = GND
b = 1V4 tape mode
0V1 radio mode
c = 0V8 tape mode
12V9 radio mode

7601 TDA1516BQ/N2

1 = 2V2
2 = 2V1
3 = GND
4 = 2V1
5 = 6V9
6 = 14V3
7 = GND
8 = 14V3
9 = 6V9
10 = 14V3
11 = 14V
12 = 7V
13 = 2V1

7602 TDA1516BQ/N2

1 = 2V1
2 = 2V1
3 = GND
4 = 2V1
5 = 6V9
6 = 14V3
7 = GND
8 = 14V3
9 = 6V9
10 = 14V3
11 = 14V
12 = 7V
13 = 2V1

7701 TSA6057/C5

1 = 1V2
2 = 1V2
3 = 5V
4 = GND
5 = 2V
6 = 2V
7 = 2V
8 = 0V3 FM
8V2 AM
9 = 0V3
10 = 4V9 (SDA)
11 = 4V9 (SCL)
12 = GND
13 = 1V4-6V7 FM
3V-4V7 AM
14 = 2V1
15 = NC
16 = 8V9

7715 X24C04I

1-4 = GND
5 = 5V (SDA)
6 = 5V (SCL)
7 = GND
8 = 5V1

7716 MC78L05ACP

1 = 13V7
2 = GND
3 = 5V1

7722 BC547

e = GND
b = 0V1
c = 4V9

7723 BC547

e = GND
b = 0V6
c = 0V1

7724 BC547

e = 5V
b = 5V7
c = 13V9

7801 TEA6300

1 = 4V9 (SDA)
2 = GND
3-7 = 4V1
8 = 3V2
9 = NC
10 = 4V1
11 = 8V1
12 = NC
13 = 3V2
14 = 4V1
15 = 4V1
16 = 3V2
17 = NC
18 = GND
19 = 4V1
20 = 4V1
21 = 3V2
22-26 = 4V1
27 = 8V2
28 = 4V9 (SCL)

7802 BC547

e = 5V
b = 5V5
c = 5V1

7903 BC547

e = 5V
b = 5V6
c = 14V2

7904 BC137-16

e = 8V9
b = 9V5
c = 14V2

7905 BD438

e = 14V3
b = 13V5
c = 14V2

7906 BC556B

e = 14V3
b = 13V9
c = 10V2

7907 BC556B

e = 14V3
b = 13V6
c = 14V2

7908 BC547

e = GND
b = 0V8
c = 0V2

7909 BC547

e = GND
b = 0V6
c = 0V1

7911 BC547

e = GND
b = 0V7
c = 0V1

7912 BC547

e = GND
b = 0V1
c = 5V

7717 BU5812F

1 = 4V6
2 = GND
3-6 = 4V8
7-15 = 0V1
16-18 = 4V9

7718 PCF8566T

1 = 5V (SDA)
2 = 5V (SCL)
3 = NC
4 = NC
5 = 5V
6-12 = GND
13 = 2V5
14 = 2V5
15 = 2V5
16 = NC
17-39 = 2V5
40 = NC

7901 BC817-40

e = GND
b = 0V3
c = 3V3

7902 BC847

e = GND
b = 0V8
c = 0V2

7914 BC847

e = GND
b = 0V1
c = 5V

7915 BC817-40

e = GND
b = 0V8
c = 0V5

... V any position
... V AM position AM
... V FM position FM
... V > position forward play
... V < position reverse play

extension * means signal strength dependent

6002 BB204G

1 = GND
2 = 1V4-6V3 FM
3 = 0 V

6003 BB204G

1 = GND
2 = 1V4-6V3 FM
3 = 0 V

6004 BB204G

1 = 0 V
2 = 7V4
3 = GND

7000 LA1177

1 = 2V8
2 = 8V4
3 = 3V1-7V9*
4 = 2V
5 = GND
6 = 5V
7 = 1V5
8 = 4V5
9 = 8V4

7001 BF992

g1 = 4V3
g2 = 2V2-5V5*
s = 2V3-4V1*
d = 8V5

7002 BC549C

e = GND
b = 0V1
c = 6V7

7005 BC558C

e = 8V9
b = 8V2
c = 8V7

7101 2SK507E

e = 0V
b = GND
c = 8V7

7102 TEA6200

1 = 7V1
2 = 4V
3 = 8V7
4 = 8V7
5 = 8V8
6 = 8V7
7 = 0V6
8 = 4V
9 = 4V
10 = 4V
11 = 7V1
12 = 1V3
13 = 5V2
14 = 8V1
15 = 4V7
16 = 4V7
17 = GND
18 = 1V7
19 = 1V3
20 = 3V2

7201 TEA6100

1 = 8V8
2 = 0V6
3 = 0V5-4V8 FM*
4 = 1V7
5 = 0V2-4V5 AM*
6 = 0V3
7 = GND
8 = 8V9
9 = 4V9 (SCL)
10 = 4V9 (SDA)
11 = 4V3
12 = 4V6
13 = 4V6
14 = 2V5
15 = 4V9
16-20 = 2V9
20 = GND

7401 TDA1591/V2A

1 = 4V
2 = 4V4
3 = GND
4 = 3V
5 = 8V5
6 = 2V2
7 = 0V
8 = 6V4
9 = 3V8
10 = 3V6
11 = 3V8
12 = 3V8
13 = 3V8
14 = 3V8
15 = 1V3-2V8 FM*
3V6 AM*
16 = 2V6
17 = 2V6
18 = 0V
19 = 0V
20 = 3V

7402 BC547

e = 0V1-0V FM*
b = 0V5-0V1 FM*
c = 0V9-5V3 FM*

7403 BC558C

e = 0V9-5V3 FM*
b = 0V5-4V8 FM*
c = GND

7404 BC547

e = 0V4-4V8 FM*
b = 0V9-5V4 FM*
c = 8V9

7406 BC547

e = GND
b = 0V3 FM
0V7 AM
c = 2V2 FM
0V AM

7501 TA7784P

1 = 8V5
2 = 2V8
3 = 5V0 >
0V0 <
4 = NC
5 = 2V2
6 = 2V2
7 = 2V2
8 = GND
9 = 2V2
10 = NC
11 = 2V2
12 = 2V2
13 = 2V2
14 = NC
15 = NC
16 = 2V8

7503 LA2000

1 = 1V9
2 = 8V9
3 = 1V9
4 = NC
5 = GND
6 = 4V9-0V MSS
7 = NC
8 = NC
9 = 8V9

7504 BC547

e = 0V1
4V5 tape mute
b = 0V7
5V tape mute
c = 0V1
4V8 tape mute

7505 BC547

e = GND
b = 0V8 tape mode
0V1 radio mode
c = 0V2 tape mode
13V3 radio mode

7506 BSR50

e = GND
b = 1V4 tape mode
0V1 radio mode
c = 0V8 tape mode
12V9 radio mode

7601 TDA1516BQ/N2

1 = 2V2
2 = 2V1
3 = GND
4 = 2V1
5 = 6V9
6 = 14V3
7 = GND
8 = 14V3
9 = 6V9
10 = 14V3
11 = 14V
12 = 7V
13 = 2V1

7602 TDA1516BQ/N2

1 = 2V1
2 = 2V1
3 = GND
4 = 2V1
5 = 6V9
6 = 14V3
7 = GND
8 = 14V3
9 = 6V9
10 = 14V3
11 = 14V
12 = 7V
13 = 2V1

7701 TSA6057/C5

1 = 1V2
2 = 1V2
3 = 5V
4 = GND
5 = 2V
6 = 2V
7 = 2V
8 = 0V3 FM
8V2 AM
9 = 0V3
10 = 4V9 (SDA)
11 = 4V9 (SCL)
12 = GND
13 = 1V4-6V7 FM
3V-4V7 AM
14 = 2V1
15 = NC
16 = 8V9

7715 X24C04I

1-4 = GND
5 = 5V (SDA)
6 = 5V (SCL)
7 = GND
8 = 5V1

7716 MC78L05ACP

1 = 13V7
2 = GND
3 = 5V1

7722 BC547

e = GND
b = 0V1
c = 4V9

7723 BC547

e = GND
b = 0V6
c = 0V1

7724 BC547

e = 5V
b = 5V7
c = 13V9

7801 TEA6300

1 = 4V9 (SDA)
2 = GND
3-7 = 4V1
8 = 3V2
9 = NC
10 = 4V1
11 = 8V1
12 = NC
13 = 3V2
14 = 4V1
15 = 4V1
16 = 3V2
17 = NC
18 = GND
19 = 4V1
20 = 4V1
21 = 3V2
22-26 = 4V1
27 = 8V2
28 = 4V9 (SCL)

7802 BC547

e = 5V
b = 5V5
c = 5V1

7903 BC547

e = 5V
b = 5V6
c = 14V2

7904 BC137-16

e = 8V9
b = 9V5
c = 14V2

7905 BD438

e = 14V3
b = 13V5
c = 14V2

7906 BC556B

e = 14V3
b = 13V9
c = 10V2

7907 BC556B

e = 14V3
b = 13V6
c = 14V2

7908 BC547

e = GND
b = 0V8
c = 0V2

7909 BC547

e = GND
b = 0V6
c = 0V1

7911 BC547

e = GND
b = 0V7
c = 0V1

7912 BC547

e = GND
b = 0V1
c = 5V

7717 BU5812F

1 = 4V6
2 = GND
3-6 = 4V8
7-15 = 0V1
16-18 = 4V9

7718 PCF8566T

1 = 5V (SDA)
2 = 5V (SCL)
3 = NC
4 = NC
5 = 5V
6-12 = GND
13 = 2V5
14 = 2V5
15 = 2V5
16 = NC
17-39 = 2V5
40 = NC

7901 BC817-40

e = GND
b = 0V3
c = 3V3

7902 BC847

e = GND
b = 0V8
c = 0V2

7914 BC847

e = GND
b = 0V1
c = 5V

7915 BC817-40

e = GND
b = 0V8
c = 0V5

5.4 MAIN PANEL (CHIP)

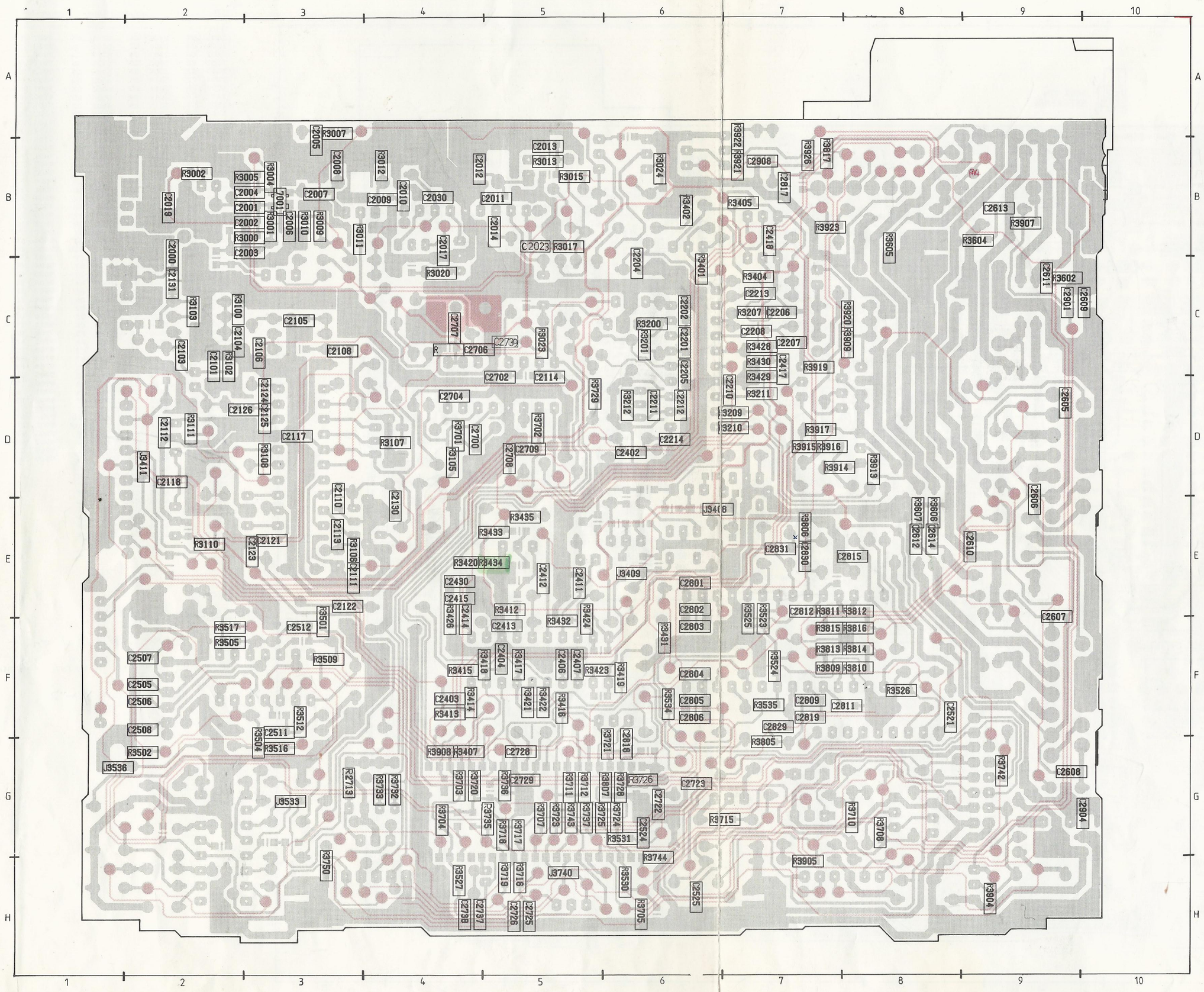

2000	B2	2506	F2	3020	C4	3534	F6
2001	B3	2507	F2	3023	C5	3535	F7
2002	B3	2508	F2	3024	B6	3536	G2
2003	B3	2511	F3	3100	C2	3602	C9
2004	B3	2512	F3	3102	C2	3604	B9
2005	A3	2521	F8	3103	C2	3605	B8
2006	B3	2524	G6	3105	D4	3606	E8
2007	B3	2525	H6	3106	E3	3607	E8
2008	B3	2605	D9	3107	D4		
2009	B4	2606	E9	3108	D3	3701	D4
2010	B4	2607	F9	3110	E2	3702	D5
2011	B5	2608	G9	3111	D2	3703	G4
2012	B4	2609	C10	3200	C6	3704	G4
2013	B5	2610	E9	3201	C6	3705	H6
2014	B5	2611	C9	3207	C7	3707	G5
2017	B4	2612	E8	3209	D7	3708	G8
2019	B2	2613	B9	3210	D7	3710	G8
2030	B4	2614	E8	3211	D7	3711	G5
2101	C2	2700	D4	3212	D6	3712	G5
2103	C2	2702	D5	3401	C6	3715	G6
2104	C2	2704	D4	3402	B6	3716	H5
2105	C3	2706	C4	3404	C7	3717	G5
2106	C3	2707	C4	3405	B7	3718	G5
2108	C3	2708	D5	3407	G4	3719	H5
2110	D3	2709	D5	3408	E6	3720	G4
2111	E3	2722	G6	3409	E6	3721	G6
2112	D2	2723	G6	3411	D2	3723	G5
2113	E3	2725	H5	3412	E5	3723	G4
2114	D5	2726	H5	3413	F4	3724	G6
2117	D3	2728	G5	3414	F4	3725	G5
2118	D2	2729	G5	3415	F4	3726	G6
2121	E3	2737	H4	3416	F5	3728	G6
2122	E3	2738	H4	3417	F5	3729	D5
2123	E3	2801	E6	3418	F5	3733	G4
2124	D3	2802	E6	3419	F6	3735	G5
2125	D3	2803	F6	3420	E4	3736	G5
2126	D2	2804	F6	3421	F5	3737	G5
2130	E4	2805	F6	3422	F5	3740	H5
2131	C2	2806	F6	3423	F5	3742	G9
2201	C6	2809	F7	3424	F5	3743	G5
2202	C6	2811	F8	3426	E4	3744	H6
2204	C6	2812	E7	3428	C7	3750	H3
2205	D6	2815	E8	3429	D7	3805	G7
2206	C7	2817	B7	3430	C7	3806	E7
2207	C7	2818	G6	3431	F6	3807	G6
2208	C7	2819	F7	3432	F5	3809	F7
2210	D7	2829	F7	3433	E5	3810	F8
2211	D6	2830	E7	3434	E5	3811	E7
2212	D6	2831	E7	3435	E5	3812	E8
2213	C7	2901	C9	3501	F3	3813	F7
2214	D6	2904	G10	3502	G2	3814	F8
2402	D6	2908	B7	3504	G3	3815	F7
2403	F4	3000	B3	3505	F2	3816	F8
2404	F5	3001	B3	3509	F3	3817	B7
2406	F5	3002	B2	3512	F3	3904	H9
2407	F5	3004	B3	3516	G3	3905	H7
2411	E5	3005	B3	3517	F2	3907	B9
2412	E5	3007	A3	3523	F7	3908	G4
2413	F5	3009	B3	3524	F7	3909	C8
2414	E4	3010	B3	3525	F7	3913	D8
2415	E4	3011	B4	3526	F8	3914	D7
2417	C7	3012	B4	3527	H4	3915	D7
2418	B7	3013	B5	3530	H6	3916	D7
2430	E4	3015	B5	3531	G6	3917	D7
2505	F2	3017	B5	3533	G3	3919	C7
						3920	C8
						3921	B7
						3922	A7
						3923	B7
						3926	B7
						7001	B3
						2023	B5
						2739	C5

6.1 RADIO RF – IF

1001	D11	1701	H14	2005	A 5	2011	C 9	2020	C 7	2104	E 1	2111	D 3	2118	I 5	2124	G 2	2701	F 9	2707	G13	3002	C 2	3009	A 4	3015	C 7	3021	D10	3101	H 2	3107	I 4	3702	E14	5004	D10	5106	E 3	5702	H12	6103	D 4	7102	G 7
1002	B12	2000	B 1	2006	A 4	2012	D 9	2021	A10	2105	F 2	2113	D 5	2119	I 7	2125	G 2	2702	E 9	2708	F15	3003	A13	3010	A 5	3016	C 7	3022	C13	3102	G 1	3108	I 6	3734	F14	5101	H 2	5108	E 4	6002	D 1	7000	B10	7701	F10
1101	F 7	2001	B 2	2007	B 5	2013	D 7	2023	D13	2106	F 3	2114	E 9	2120	I 7	2126	G 2	2703	H10	2709	F15	3004	A 3	3011	C 6	3017	C 8	3023	B13	3103	D 1	3109	H 9	5000	B 1	5102	D 1	5109	F 7	6003	B 6	7001	B 3		
1102	F 8	2002	C 3	2008	C 5	2014	D10	2030	A 9	2108	E 3	2115	I 3	2121	I 9	2130	F 6	2704	H12	2739	H 9	3005	A 3	3012	C 6	3018	C 2	3024	A11	3104	F 2	3110	I 5	5001	A 5	5103	D 1	5110	I 1	6004	D 8	7002	A12		
1103	I 5	2003	A 2	2009	B 6	2017	C10	2101	G 1	2109	F 5	2116	I 3	2122	H11	2131	C 1	2705	H11	3000	C 2	3007	A 5	3013	D 7	3019	D12	3032	A10	3105	C 3	3111	I 6	5002	B 6	5104	E 1	5111	I 4	6101	F 1	7005	C12		
1104	I 6	2004	A 3	2010	B 7	2019	D 2	2103	F 1	2110	F 5	2117	I 3	2123	I10	2700	F 9	2706	G10	3001	A 2	3008	A 2	3014	C 6	3020	C11	3100	E 1	3106	C 4	3701	F 8	5003	D 9	5105	E 2	5701	H10	6102	F 1	7101	G 1		

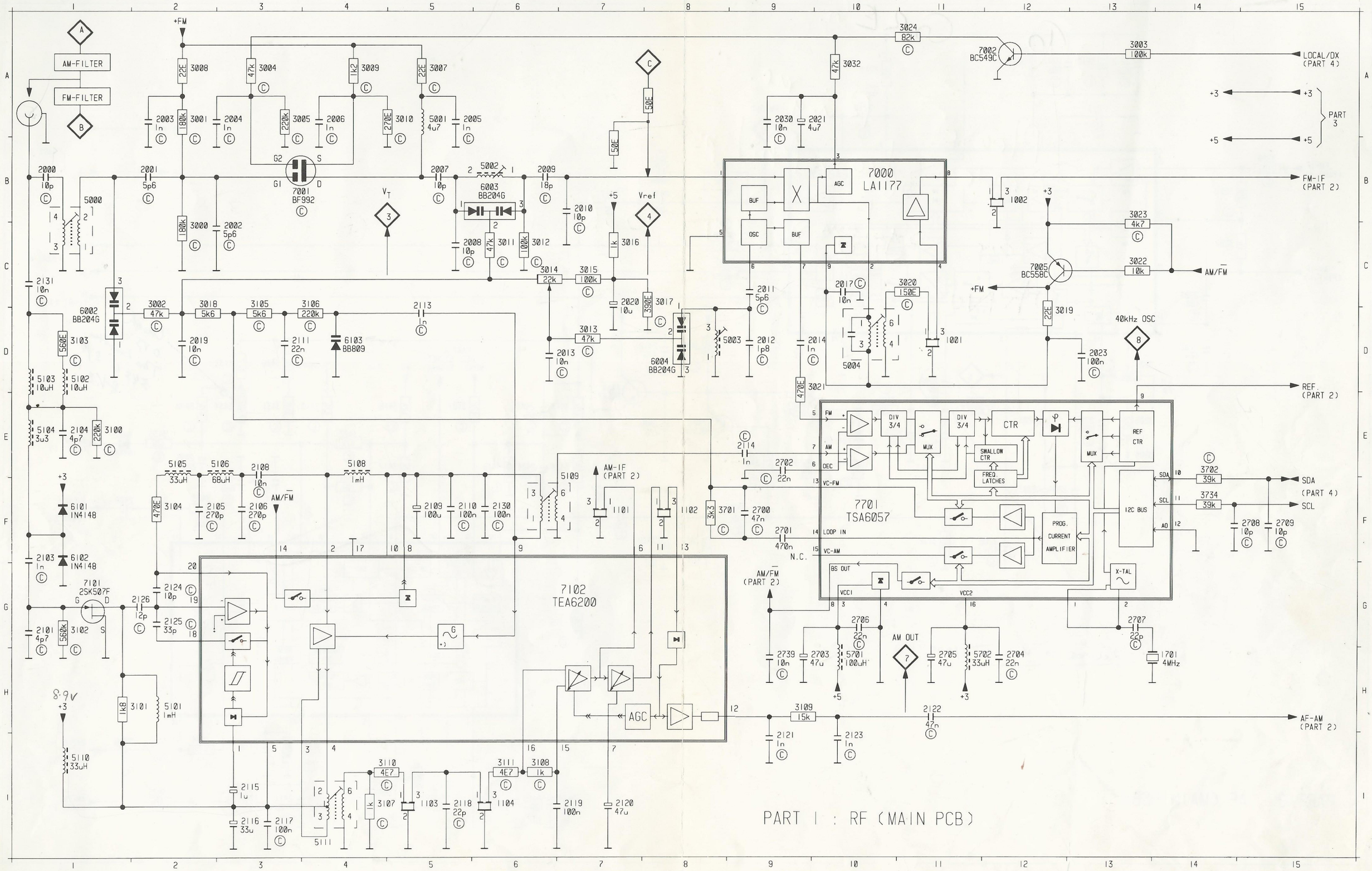

PART 1 : RF (MAIN PCB)

6.2 RADIO AF

1401	I11	2204	F 4	2207	E 5	2211	A 4	2401	E 8	2405	E14	2409	I14	2413	I12	2417	F 8	3201	B 2	3205	E 3	3209	C 8	3401	E 6	3405	D 8	3409	I14	3414	E 9	3418	E10	3422	E12	3426	I10	3430	F 8	3434	E13	6402	E15	7403	E 8
2201	C 2	2205	E 3	2208	D 5	2212	A 3	2402	B 8	2406	F13	2410	I13	2414	I10	2430	I 9	3202	C 2	3206	D 3	3210	C 8	3402	E 6	3406	D13	3411	B 9	3415	G 9	3419	E12	3423	F14	3427	I12	3431	E13	3435	E14	7201	B 6	7404	E 9
2202	D 2	2205	D 8	2209	E 6	2213	A 3	2403	E10	2407	F13	2411	I13	2415	I10	2431	B 8	3203	E 4	3207	F 5	3211	A 6	3403	E 7	3407	E11	3412	I11	3416	E11	3420	E14	3424	I14	3428	F 7	3432	I12	5201	A 4	7401	G13	7406	I13
2203	F 4	2206	F 4	2210	A 6	2214	B 8	2404	E10	2408	F14	2412	F 9	2416	I12	3200	B 1	3204	E 3	3208	E 5	3212	A 3	3404	E 7	3408	F14	3413	E 9	3417	E11	3421	F12	3425	I14	3429	F 8	3433	D13	6401	E 6	7402	E 7		

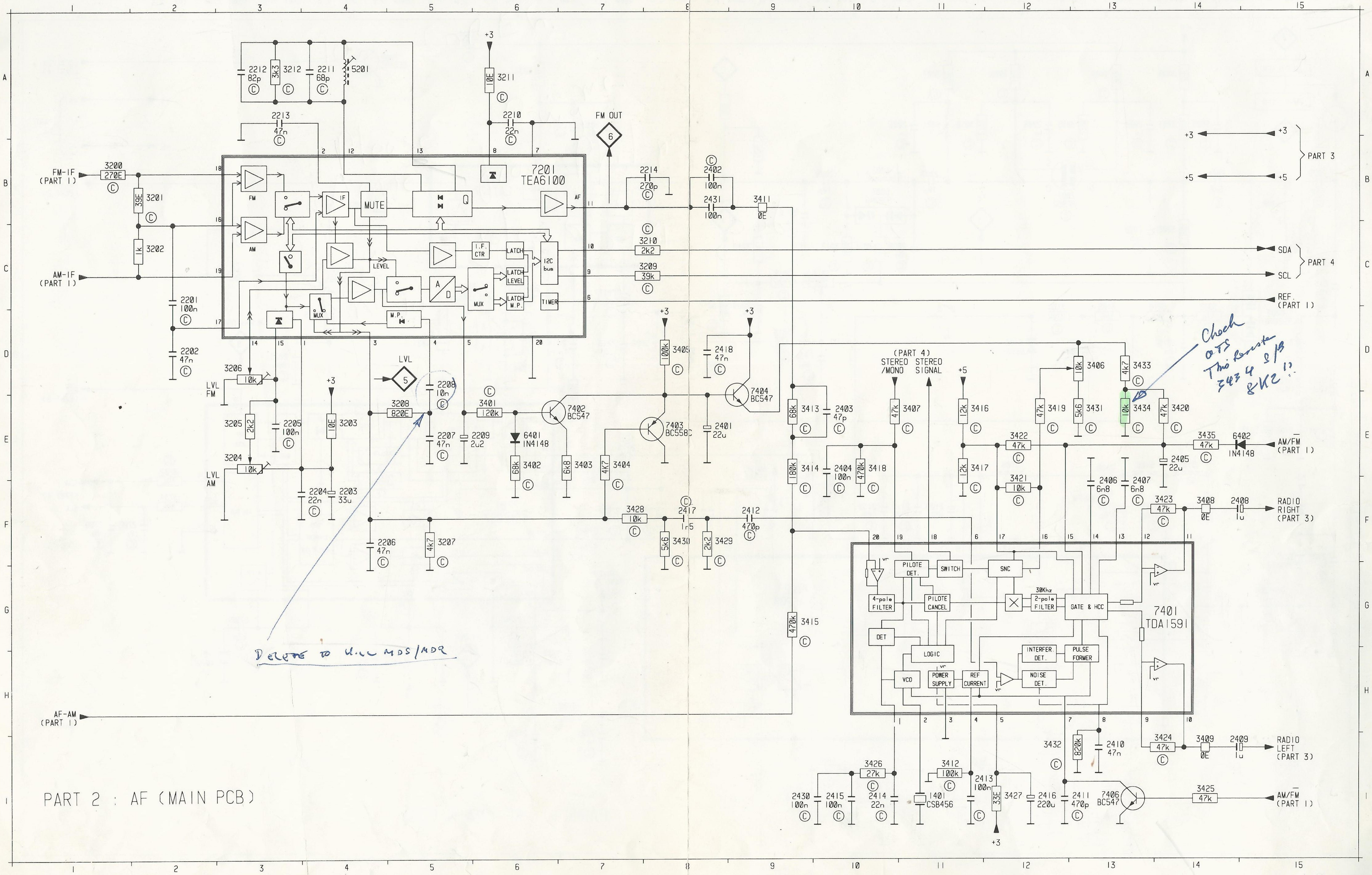

Check O/S This Resistor 3434 S/B 8K2 !!

Delete to U.K. MDS/MDR

6.3 SOFAC AND POWER SUPPLY

1900	G15	2605	C10	2610	D13	2615	A11	2801	G 2	2806	A 2	2811	A 5	2816	G 7	2830	G 5	2905	I 2	3603	B13	3609	A10	3809	B 8	3814	B 9	3819	C 8	3908	I 3	3913	H 4	3918	I 5	3924	I12	6801	F 7	6909	H 9	7602	D11	7905	G 7	7911	H12
2601	C 9	2606	B10	2611	B13	2616	D11	2802	G 2	2807	G 4	2812	G 5	2817	G11	2831	G 3	2906	I 4	3604	C13	3605	A 4	3810	C 8	3815	E 9	3904	H 4	3909	H 8	3914	H 5	3919	I 6	3925	H13	6905	I11	6911	I 4	7801	A 6	7906	H 5	7912	H11
2602	B 9	2607	F10	2612	F13	2617	B14	2803	G 3	2808	G 4	2813	G 6	2818	A 9	2901	I11	2907	H 8	3605	E13	3606	G 4	3811	D 8	3816	E 9	3905	H 2	3910	H 7	3915	I 4	3920	I 6	3926	H13	6906	I 4	6914	H13	7802	F 9	7907	I 6		
2603	E 9	2608	E10	2613	C13	2618	E14	2804	A 2	2809	A 4	2814	G 6	2819	A 3	2903	I 3	2908	H13	3606	E13	3607	G10	3812	E 8	3817	F11	3906	H 2	3911	H 7	3916	I 5	3921	H12	5901	G 9	6907	H 2	6916	I11	7903	H 3	7908	I 7		
2604	D 9	2609	A13	2614	E13	2620	D10	2805	A 3	2810	A 4	2815	G 7	2829	A 5	2904	H 1	3602	B13	3607	F13	3608	F10	3813	B 9	3818	C 8	3907	I12	3912	H 8	3917	I 5	3922	H12	6605	A10	6908	I 2	7601	A11	7904	G 1	7909	I 4		

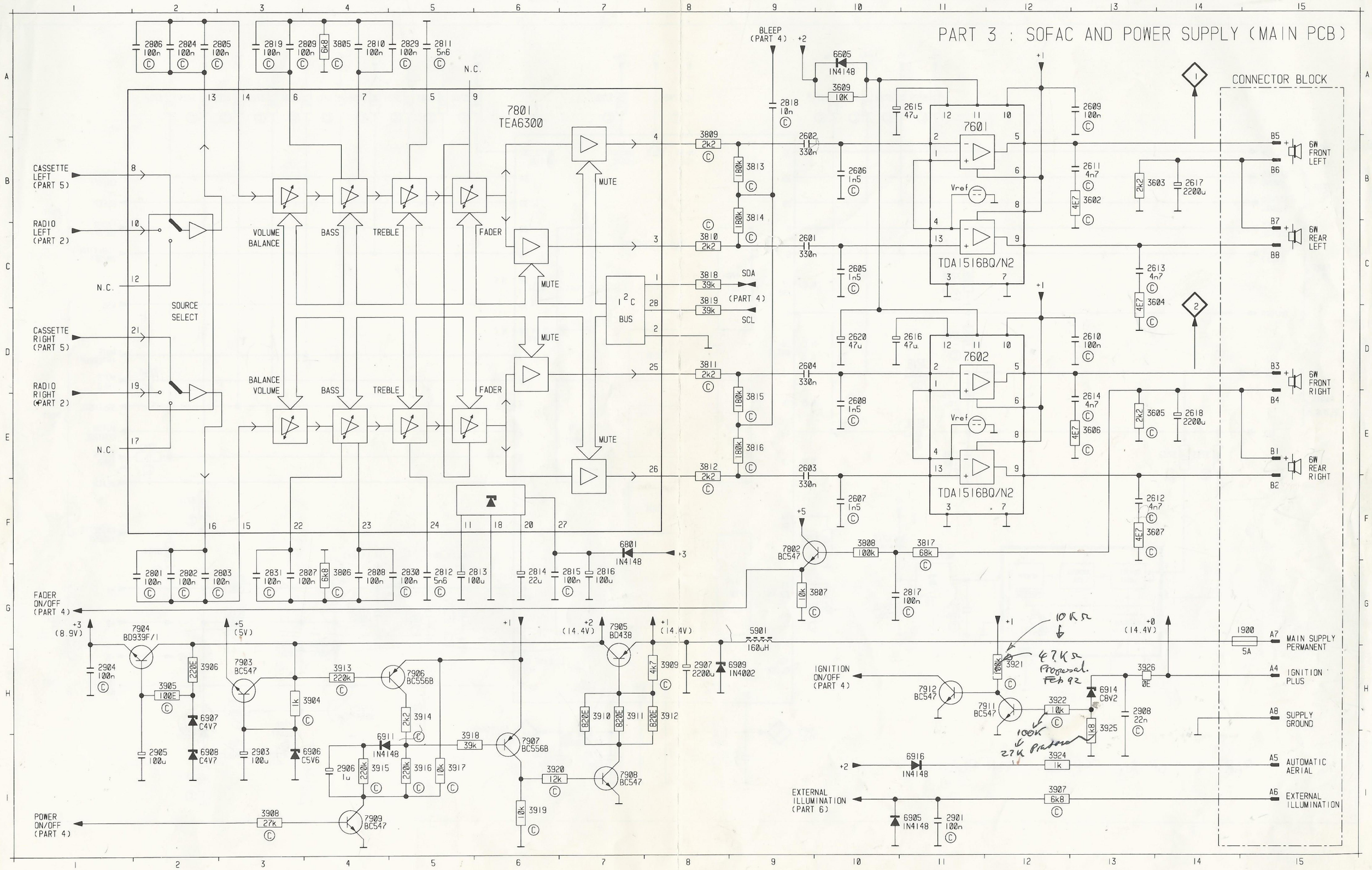

6.4 µC AND EEPROM

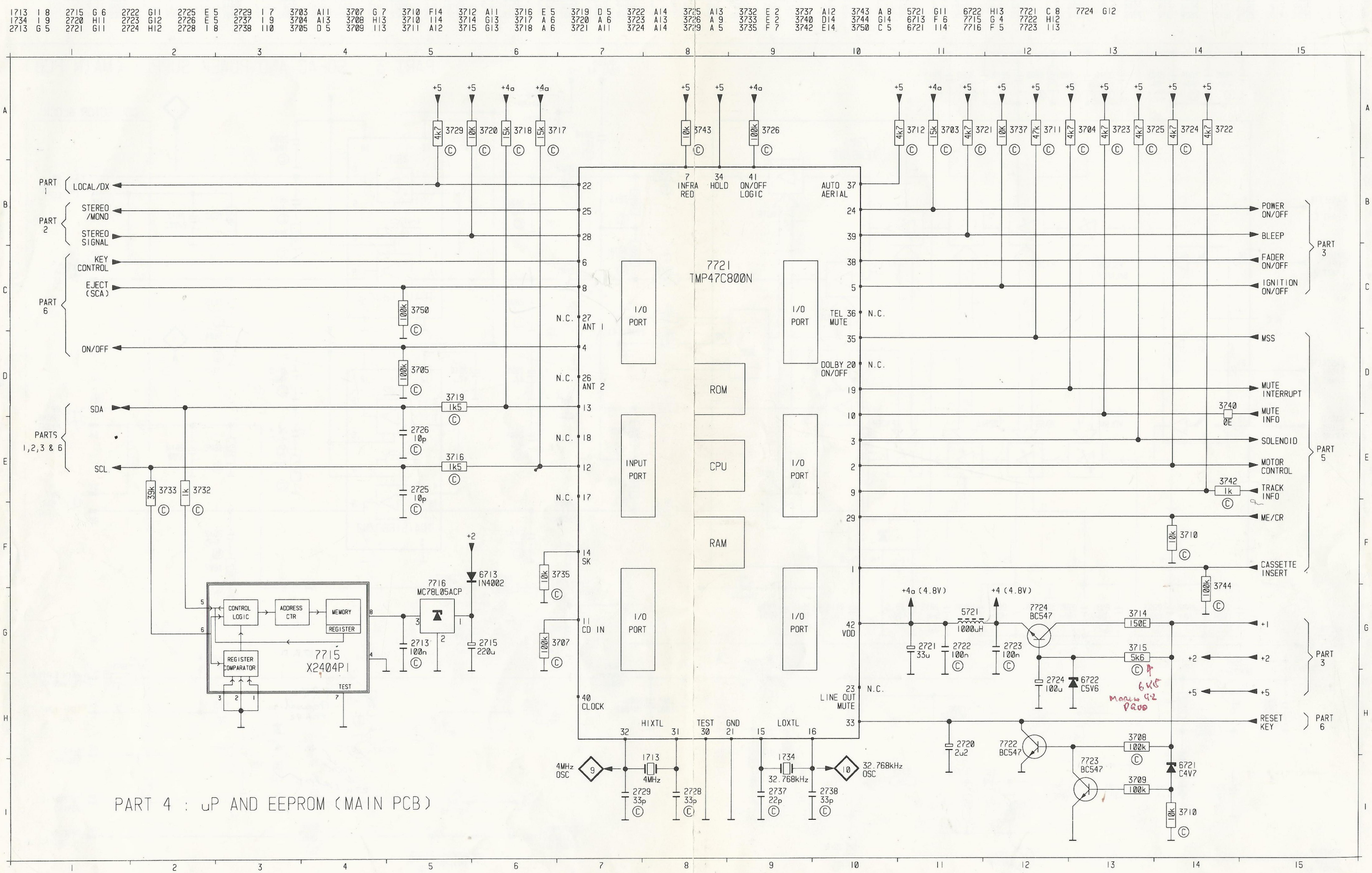

6.5 PRE-AMPLIFIER AND MSS

2501	B 4	2504	F 8	2507	D 2	2510	B 6	2517	G 8	2523	E12	2526	J 9	3503	G 5	3508	F 7	3513	C 7	3523	D10	3526	E13	3530	I10	3534	F 9	6501	H11	7501	D 5	7505	I 9
2502	E 2	2505	F 2	2508	C 2	2511	B 7	2521	D11	2524	J12	3501	B 5	3504	A 6	3509	F 8	3516	B 8	3524	D10	3527	G10	3531	I13	3535	C 9	6502	H 9	7503	D12	7506	I11
2503	C 8	2506	F 2	2509	G 6	2512	F 7	2522	E12	2525	H11	3502	A 5	3505	G 6	3512	B 8	3517	G 8	3525	D10	3529	H10	3533	F 9	3536	B 5	6504	G 9	7504	G 9		

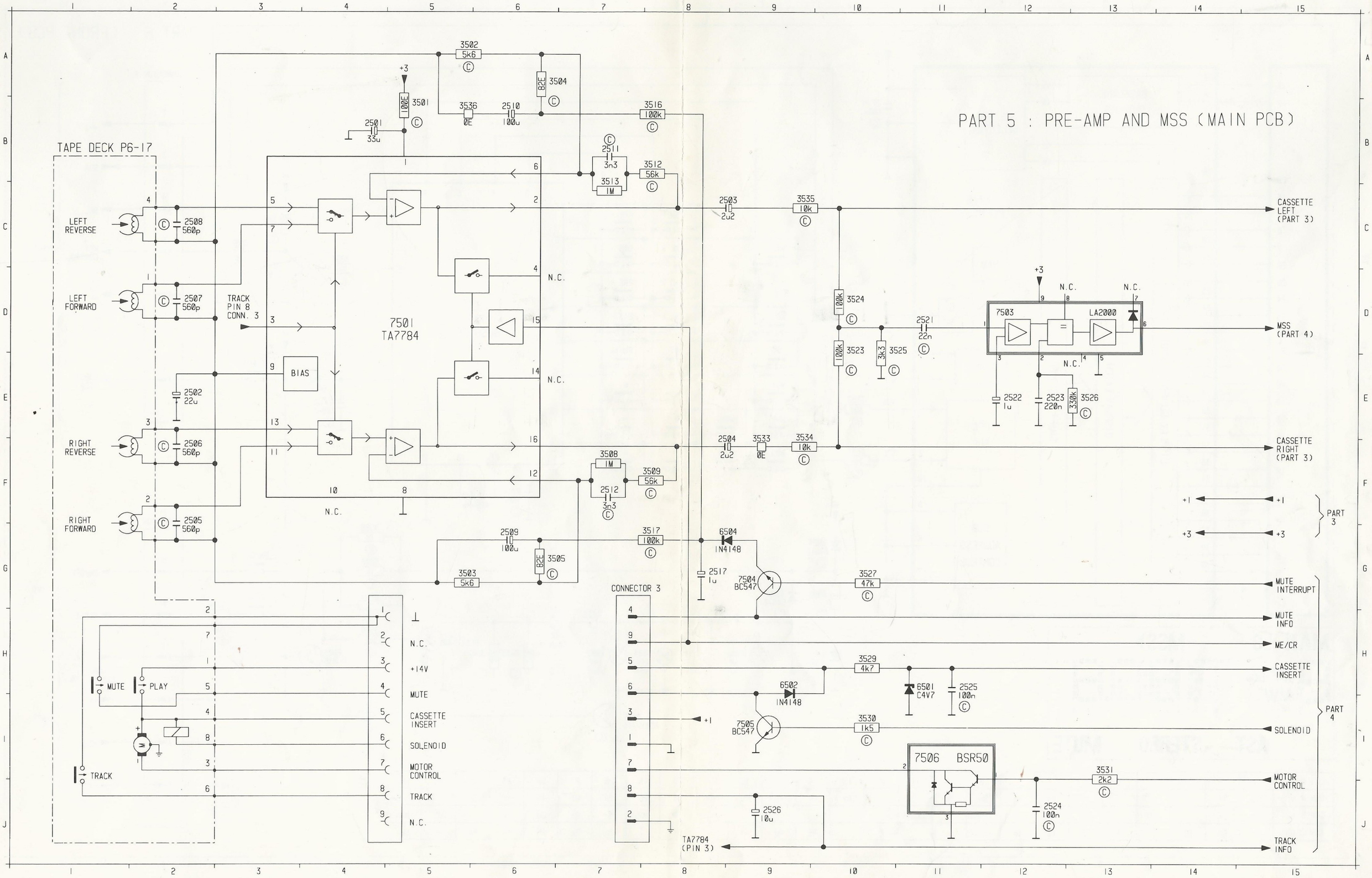

6.6 KEY MATRIX AND LCD

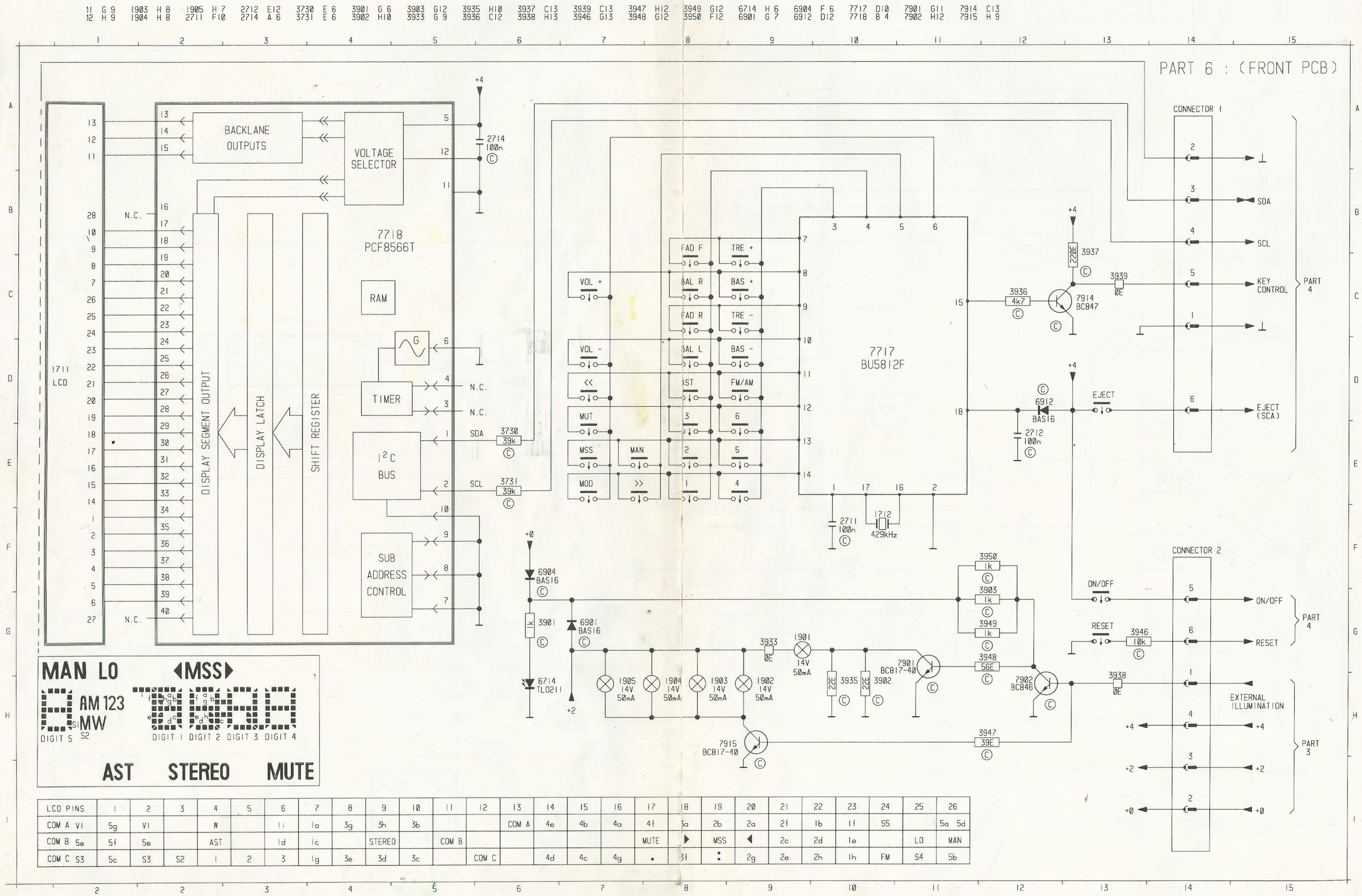

LCD PINS	1	2	3	4	5	6	7	8	9	10	11	12	13	14	15	16	17	18	19	20	21	22	23	24	25	26
COM A VI	5g	VI		W		1i	1a	3g	3h	3b			COM A	4e	4b	4a	4f	3a	2b	2a	2f	1b	1f	S5		5a 5d
COM B 5e	5f	5e		AST		1d	1c		STEREO		COM B						MUTE	▶	MSS	◀	2c	2d	1e		LO	MAN
COM C S3	5c	S3	S2	1	2	3	1g	3e	3d	3c		COM C		4d	4c	4g	.	3f	:	2g	2e	2h	1h	FM	S4	5b

7.1 ALIGNMENT TABLE

For more information see general information "General alignment procedures for car radio"

Alignment	SK					
Oscillator Coil	FM	—	—	87.5 MHz	5003	3 & 4 Align for 0 ± 5 mV
Quadrature detector	FM	93 MHz, 5 µV Δf = 75 kHz	B		5201	1 align for symetrical distortion on sine wave
RF Coils	FM	87.5 MHz, 5 µV Δf = 22.5 kHz f mod. = 1 kHz	B		5000 5002	1 Align for max height on sine wave
RF Potmeter	FM	103 MHz, 5 µV Δf = 22.5 kHz f mod. = 1 kHz	B		3014	1 Align for max height on sine wave
IF Coil	FM	93 MHz, 5 µV Δf = 22.5 kHz f mod. = 1 kHz	B		5004	1 Align for max height on sine wave
α–3 dB	FM	93 MHz, 10µV Δf = 22.5 kHz f mod. = 400 Hz	B		3206	5 1.5V DC ± 50mV
Stereo separation	FM	93 MHz, 1 mV stereo signal	B		+	L 1 R 2 0 dB (775mV)
		93 MHz, 1 mV stereo – R			3406	R 2 – L 1 30 dB
AM-search level	AM	990 kHz, 70 µV	A		3204	5 1.5 V DC ± 50 mV

7.2 CHECK TABLE

For information see general information "General alignment procedures for car radio"

Check	SK				Setting of controls		
Reference oscillator frequencies	FM	—	—	—	—	8 40 kHz ± 1 Hz 9 4.0 MHz ± 20 kHz 10 32.768 kHz ± 5 Hz	
α–3 dB	FM	93 MHz, 1mV Δf = 22.5 kHz f mod. = 400Hz	B			1 0 dB (775 mV)	
		93 MHz, 10 µV Δf = 22.5 kHz f mod. = 400Hz				1 – 3 dB	
FM-mute	FM	93 MHz, 1 mV	B			1 0 dB (775 mV)	
		no signal				–20 dB≤ 1 ≤ –30 dB	
30 dB SNR	FM	93 MHz, 7 µV Δf = 22.5 kHz f mod. = 1 kHz	B			1 0 dB (775 mV)	
		93 MHz, 7 µV without mod.				1 ≥ 30 dB	

Check	SK				Setting of controls		
26 dB SNR	AM	990 kHz, 100 µV 1 kHz, 30% AM	A			1 0 dB (775 mV)	
		900 kHz, 100 µV without mod.				1 ≥ 26 dB	
Demodulated FM-levels	FM	93 MHz, 1mV Δf = 22.5 kHz f mod. = 1 kHz	B			6 200 mV ± 1 dB	
		93 MHz, 10 µV Δf = 6.75 kHz f mod. = 19 kHz				6 50 mV ± 1 dB	
Demodulated AM-level	AM	990 kHz, 1 mV 1 kHz, 30% AM	A			7 350 mV $^{+150}_{-100}$	
Cross talk	FM	93 MHz, 1 mV stereo signal	B		+	L 1 R 2 0 dB (775mV)	
		93 MHz, 1 mV stereo-R				R 2 – L 1 ≥ 28 dB	
SDS/10 dB Cross talk	FM	93 MHz, 1 mV stereo signal	B		+	L 1 R 2 0 dB (775mV)	
		93 MHz, 140 µV stereo-R				R 2 – L 1 ≥ 10 dB	
Search level FM	FM	93 MHz, 22 µV	B			3 2.0 V-DC	
Search level AM	AM	990 kHz, 70 µV	A			3 1.5 V-DC	
VC-FM	FM	—	—	87.5 MHz		3 ≥ 1.0 V-DC	
				108 MHz		3 ≤ 6.0 V-DC	
VC-AM	AM	—	—	1629 kHz		3 ≤ 5.0 V-DC	
I.A.C.	FM	Vp, τ, T τ = 10 µsec T = 300 µsec Vp = 60 mV	C				1 25-50 µs

9.1 LIST OF MECHANICAL PARTS

Only those parts of which the item number is stated below, are considered service parts

1	4822 459 50614
10	4822 410 61251
11	4822 410 61252
12	4822 410 61253
13	4822 410 61258
15	4822 410 61259
16	4822 410 61261
17	4822 410 61262
18	4822 410 61263
19	4822 410 61264
20	4822 410 61254
21	4822 410 61255
22	4822 410 61256
23	4822 410 61257
24	4822 443 63301
25	4822 410 61247
26	4822 410 61248
27	4822 410 61249
28	4822 410 61265
29	4822 410 61266
30	4822 410 61267
35	4822 410 61246
103	4822 256 91774
105	4822 492 70901
106	4822 380 20394
107	4822 256 91776
108	4822 459 40677
110	4822 492 70904
120	4822 276 13091
125	4822 256 91775
126	4822 492 52244
221	4822 267 30883

8. EXPLODED VIEW

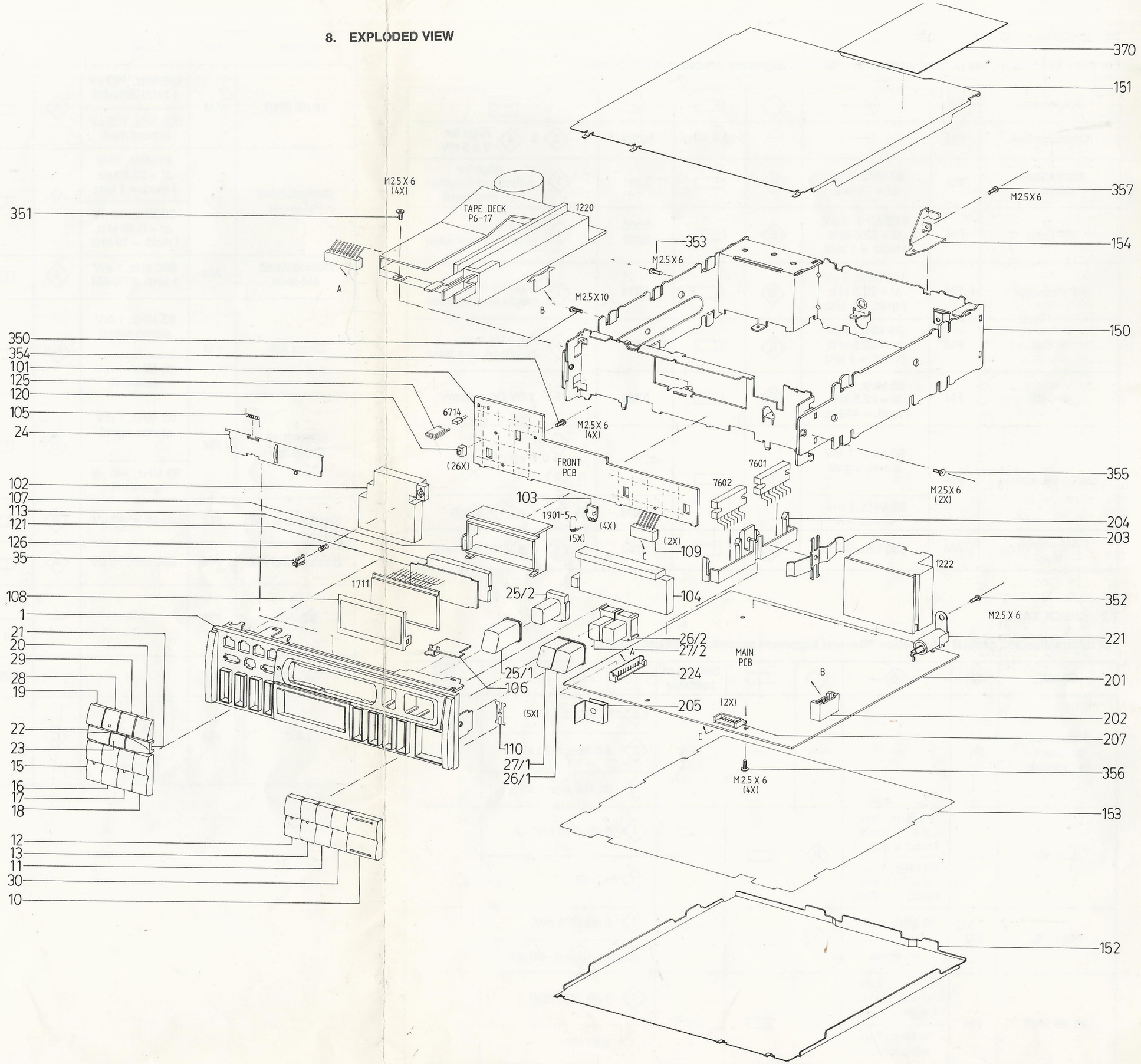

9.2 LIST OF ELECTRICAL PARTS

– Miscellaneous –

1001	4822 242 71341	SFE10.7S2-A
1002	4822 242 71341	SFE10.7S2-A
1101	4822 242 71883	SFE10.7S318-D
1102	4822 242 71883	SFE10.7S318-D
1103	4822 242 72343	10T7BC(10.7MHz)
1104	4822 242 72343	10T7BC(10.7MHz)
1222	4822 265 41105	Connector block
1401	4822 242 80249	Resonator CSB456FB11
1701	4822 242 80251	Crystal 4 MHz
1711	4822 130 90985	LCD display
1712	4822 242 71498	Crystal 429 kHz
1713	4822 242 70831	Crystal 4 MHz
1734	4822 242 70938	Crystal 32.768 kHz
1900	4822 071 25002	Fuse 5A
1901	4822 134 41066	Lamp assy 14V 50mA
1902	4822 134 41066	Lamp assy 14V 50mA
1903	4822 134 41066	Lamp assy 14V 50mA
1904	4822 134 41066	Lamp assy 14V 50mA
1905	4822 134 41066	Lamp assy 14V 50mA

– C –

2000	5322 122 32448	10pF 5% 50V
2001	5322 122 32967	5p6 5% NP0 50V
2002	5322 122 32967	5p6 5% NP0 50V
2003	5322 122 34123	1nF 10% X7R 50V
2004	5322 122 34123	1nF 10% X7R 50V
2005	5322 122 34123	1nF 10% X7R 50V
2006	5322 122 34123	1nF 10% X7R 50V
2007	5322 122 32448	10pF 5% 50V
2008	5322 122 32448	10pF 5% 50V
2009	5322 122 32965	18pF 5% NPO 50V
2010	5322 122 32448	10pF 5% 50V
2011	5322 122 32967	5p6 5% NP0 50V
2012	5322 126 10343	1p8 5% NP0 63V
2013	5322 122 34098	10nF 10% X7R 63V
2014	5322 122 34123	1nF 10% X7R 50V
2017	5322 122 34098	10nF 10% X7R 63V
2019	5322 122 34098	10nF 10% X7R 63V
2020	4822 124 23179	10µF 20% 16V
2021	4822 124 23175	4µ7 20% 63V
2023	4822 122 31947	100nF 20% 63V
2030	5322 122 34098	10nF 10% X7R 63V
2101	5322 122 32287	4p7 5% NP0 50V
2103	5322 122 34123	1nF 10% X7R 50V
2104	5322 122 32287	4p7 5% NP0 50V
2105	4822 122 33216	270pF 5% NP0 50V
2106	4822 122 33216	270pF 5% NP0 50V
2108	5322 122 34098	10nF 10% X7R 63V
2109	4822 124 42179	100µF 20% 10V
2110	4822 122 31947	100nF 20% 63V
2111	5322 122 32654	22nF 10% X7R 63V
2113	5322 122 34123	1nF 10% X7R 50V
2114	5322 122 34123	1nF 10% X7R 50V
2115	4822 124 41969	1µF 20% 50V
2116	4822 124 23177	33µF 20% 16V
2117	4822 122 31947	100nF 20% 63V
2118	5322 122 32658	22pF 5% 50V
2119	5322 121 42386	100nF 5% 63V
2120	4822 124 23178	47µF 20% 16V
2121	4822 122 33339	4n7 10% X7R 50V
2122	4822 122 32542	47nF 10% X7R 63V
2123	4822 122 33891	3n3 10% X7R 63V
2124	5322 122 32448	10pF 5% 50V
2125	5322 122 32659	33pF 5% 50V
2126	4822 122 32139	12pF 5% 63V
2130	4822 122 31947	100nF 20% 63V
2131	4822 122 32442	10nF 50V
2201	4822 122 31947	100nF 20% 63V
2202	4822 122 32542	47nF 10% X7R 63V
2203	4822 124 23177	33µF 20% 16V
2204	5322 122 32654	22nF 10% X7R 63V
2205	4822 122 31947	100nF 20% 63V
2206	4822 122 32542	47nF 10% X7R 63V
2207	4822 122 32542	47nF 10% X7R 63V
2208	5322 122 34098	10nF 10% X7R 63V
2209	4822 124 41971	2µ2 20% 50V
2210	5322 122 32654	22nF 10% X7R 63V
2211	4822 122 33514	68pF 5% NP0 50V
2212	4822 122 33515	82pF 5% NP0 63V
2213	4822 122 32542	47nF 10% X7R 63V
2214	4822 122 33216	270pF 5% NP0 50V
2401	4822 124 23176	22µF 20% 16V
2402	4822 122 31947	100nF 20% 63V
2403	5322 122 32452	47pF 5% 50V
2404	4822 122 31947	100nF 20% 63V
2405	4822 124 23176	22µF 20% 16V
2406	5322 122 31866	6n8 10% X7R 63V
2407	5322 122 31866	6n8 10% X7R 63V
2408	4822 124 41969	1µF 20% 50V
2409	4822 124 41969	1µF 20% 50V
2410	4822 121 43526	47nF 5% 100V
2411	5322 122 32268	470pF 10% 50V
2412	5322 122 32268	470pF 10% 50V
2413	4822 122 31947	100nF 20% 63V
2414	5322 122 32654	22nF 10% X7R 63V
2415	4822 122 31947	100nF 20% 63V
2416	4822 124 42181	220µF 20% 10V
2417	4822 122 33174	1n5 20% X7R 50V
2418	5322 122 34098	10nF 10% X7R 63V
2430	4822 122 31947	100nF 20% 63V
2431	5322 121 42386	100nF 5% 63V
2501	4822 124 23177	33µF 20% 16V
2502	4822 124 23176	22µF 20% 16V
2503	4822 124 41971	2µ2 20% 50V
2504	4822 124 41971	2µ2 20% 50V
2505	5322 116 80853	560pF 5% NP0 63V
2506	5322 116 80853	560pF 5% NP0 63V
2507	5322 116 80853	560pF 5% NP0 63V
2508	5322 116 80853	560pF 5% NP0 63V
2509	4822 124 42179	100µF 20% 10V
2510	4822 124 42179	100µF 20% 10V
2511	4822 122 33891	3n3 10% X7R 63V
2512	4822 122 33891	3n3 10% X7R 63V
2517	4822 124 41969	1µF 20% 50V
2521	5322 122 32654	22nF 10% X7R 63V
2522	4822 124 41969	1µF 20% 50V

2523	4822 121 41741	220nF 10% 63V
2524	4822 122 31947	100nF 20% 63V
2525	4822 122 31947	100nF 20% 63V
2526	4822 124 23179	10µF 20% 16V
2601	4822 121 43635	330nF 10% 63V
2602	4822 121 43635	330nF 10% 63V
2603	4822 121 43635	330nF 10% 63V
2604	4822 121 43635	330nF 10% 63V
2605	4822 122 33174	1n5 20% X7R 50V
2606	4822 122 33174	1n5 20% X7R 50V
2607	4822 122 33174	1n5 20% X7R 50V
2608	4822 122 33174	1n5 20% X7R 50V
2609	4822 122 31947	100nF 20% 63V
2610	4822 122 31947	100nF 20% 63V
2611	4822 122 33339	4n7 10% X7R 50V
2612	4822 122 33339	4n7 10% X7R 50V
2613	4822 122 33339	4n7 10% X7R 50V
2614	4822 122 33339	4n7 10% X7R 50V
2615	4822 124 22406	47µF 20% 10V
2616	4822 124 22406	47µF 20% 10V
2617	4822 124 42178	2200µF 20% 16V
2618	4822 124 42178	2200µF 20% 16V
2620	4822 124 22406	47µF 20% 10V
2700	4822 122 32542	47nF 10% X7R 63V
2701	4822 121 43525	470nF 10% 100V
2702	5322 122 32654	22nF 10% X7R 63V
2703	4822 124 23178	47µF 20% 16V
2704	5322 122 32654	22nF 10% X7R 63V
2705	4822 124 23178	47µF 20% 16V
2706	5322 122 32654	22nF 10% X7R 63V
2707	5322 122 32658	22pF 5% 50V
2708	5322 122 32448	10pF 5% 50V
2709	5322 122 32448	10pF 5% 50V
2711	4822 122 31947	100nF 20% 63V
2712	4822 122 31947	100nF 20% 63V
2713	4822 122 31947	100nF 20% 63V
2715	4822 124 41396	220µF 20% 16V
2720	4822 124 41971	2µ2 20% 50V
2721	4822 124 23177	33µF 20% 16V
2722	4822 122 31947	100nF 20% 63V
2723	4822 122 31947	100nF 20% 63V
2724	4822 124 42179	100µF 20% 10V
2725	5322 122 32448	10pF 5% 50V
2726	5322 122 32448	10pF 5% 50V
2728	5322 122 32659	33pF 5% 50V
2729	5322 122 32659	33pF 5% 50V
2737	5322 122 32658	22pF 5% 50V
2738	5322 122 32659	33pF 5% 50V
2739	5322 122 34098	10nF 10% X7R 63V
2801	4822 122 31947	100nF 20% 63V
2802	4822 122 31947	100nF 20% 63V
2803	4822 122 31947	100nF 20% 63V
2804	4822 122 31947	100nF 20% 63V
2805	4822 122 31947	100nF 20% 63V
2806	4822 122 31947	100nF 20% 63V
2807	5322 121 42386	100nF 5% 63V
2808	5322 121 42386	100nF 5% 63V
2809	4822 122 31947	100nF 20% 63V
2810	5322 121 42386	100nF 5% 63V
2811	4822 122 32646	5n6 10% X7R 50V
2812	4822 122 32646	5n6 10% X7R 50V
2813	4822 124 42179	100µF 20% 10V
2814	4822 124 23176	22µF 20% 16V
2815	4822 122 31947	100nF 20% 63V
2816	4822 124 42179	100µF 20% 10V
2817	4822 122 31947	100nF 20% 63V
2818	5322 122 34098	10nF 10% 63V
2819	4822 122 31947	100nF 20% 63V
2829	4822 122 31947	100nF 20% 63V
2830	4822 122 31947	100nF 20% 63V
2831	4822 122 31947	100nF 20% 63V
2901	4822 122 31947	100nF 20% 63V
2903	4822 124 42179	100µF 20% 10V
2904	4822 122 31947	100nF 20% 63V
2905	4822 124 42179	100µF 20% 10V
2906	4822 124 41969	1µF 20% 50V
2907	4822 124 42178	2200µF 20% 16V
2908	4822 122 32542	47nF 10% X7R 63V

– R –

3000	4822 051 20184	180k 5% 0.1W
3001	4822 051 20184	180k 5% 0.1W
3002	4822 051 20473	47k 5% 0.1W
3003	4822 116 52234	100k 5% 0.5W
3004	4822 051 20473	47k 5% 0.1W
3005	4822 051 20224	220k 5% 0.1W
3007	4822 051 20229	22Ω 5% 0.1W
3008	4822 116 52186	22Ω 5% 0.5W
3009	4822 051 20122	1k2 5% 0.1W
3010	4822 051 20271	270Ω 5% 0.1W
3011	4822 051 20473	47k 5% 0.1W
3012	4822 051 20104	100k 5% 0.1W
3013	4822 051 20473	47k 5% 0.1W
3014	4822 100 11213	22k 30% trim.
3015	4822 051 20104	100k 5% 0.1W
3016	4822 116 52204	1k 5% 0.5W
3017	4822 051 20391	390Ω 5% 0.1W
3018	4822 116 52289	5k6 5% 0.5W
3019	4822 116 52186	22Ω 5% 0.5W
3020	4822 051 20151	150Ω 5% 0.1W
3021	4822 116 52224	470Ω 5% 0.5W
3022	4822 116 52233	10k 5% 0.5W
3023	4822 051 20472	4k7 5% 0.1W
3024	4822 051 20823	82k 5% 0.1W
3032	4822 116 52284	47k 5% 0.5W
3100	4822 051 20224	220k 5% 0.1W
3101	4822 116 52249	1k8 5% 0.5W
3102	4822 051 20564	560k 5% 0.1W
3103	4822 051 20561	560Ω 5% 0.1W
3104	4822 116 52224	470Ω 5% 0.5W
3105	4822 051 20562	5k6 5% 0.1W
3106	4822 051 20224	220k 5% 0.1W
3107	4822 051 20102	1k 5% 0.1W
3108	4822 051 20102	1k 5% 0.1W
3109	4822 116 52244	15k 5% 0.5W
3201	4822 051 20331	330Ω 5% 0.1W
3202	4822 116 52204	1k 5% 0.5W
3203	4822 116 52176	10Ω 5% 0.5W
3204	4822 100 20166	10k 30% trim.
3205	4822 116 52256	2k2 5% 0.5W
3206	4822 100 20166	10k 30% trim.
3207	4822 051 20472	4k7 5% 0.1W
3208	4822 116 52231	820Ω 5% 0.5W
3209	4822 051 20393	39k 5% 0.1W
3210	4822 051 20222	2k2 5% 0.1W

3211	4822 051 20109	10Ω 5% 0.1W
3212	4822 051 20332	3k3 5% 0.1W
3401	4822 051 20124	120k 5% 0.1W
3402	4822 051 20683	68k 5% 0.1W
3403	4822 116 52296	6k8 5% 0.5W
3404	4822 051 20472	4k7 5% 0.1W
3405	4822 051 20104	100k 5% 0.1W
3406	4822 100 20166	10k 30% trim.
3407	4822 051 20473	47k 5% 0.1W
3408	4822 051 10008	0Ω jumper
3409	4822 051 10008	0Ω jumper
3411	4822 051 10008	0Ω jumper
3412	4822 051 20104	100k 5% 0.1W
3413	4822 051 20683	68k 5% 0.1W
3414	4822 051 20184	180k 5% 0.1W
3415	4822 051 20474	470k 5% 0.1W
3416	4822 051 20123	12k 5% 0.1W
3417	4822 051 20123	12k 5% 0.1W
3418	4822 051 20474	470k 5% 0.1W
3419	4822 051 20473	47k 5% 0.1W
3420	4822 051 20473	47k 5% 0.1W
3421	4822 051 20103	10k 5% 0.1W
3422	4822 051 20473	47k 5% 0.1W
3423	4822 051 20473	47k 5% 0.1W
3424	4822 051 20473	47k 5% 0.1W
3425	4822 116 52284	47k 5% 0.1W
3426	4822 051 20273	27k 5% 0.1W
3427	4822 116 52191	33Ω 5% 0.5W
3428	4822 051 20103	10k 5% 0.1W
3429	4822 051 20222	2k2 5% 0.1W
3430	4822 051 20562	5k6 5% 0.1W
3431	4822 051 20562	5k6 5% 0.1W
3432	4822 051 20824	820k 5% 0.1W
3433	4822 051 20472	4k7 5% 0.1W
3434	4822 051 20103	10k 5% 0.1W
3435	4822 051 20473	47k 5% 0.1W
3501	4822 051 20101	100Ω 5% 0.1W
3502	4822 051 20562	5k6 5% 0.1W
3503	4822 116 52289	5k6 5% 0.5W
3504	4822 051 20829	82Ω 5% 0.1W
3505	4822 051 20829	82Ω 5% 0.1W
3508	4822 116 52235	1M 5% 0.5W
3509	4822 051 20563	56k 5% 0.1W
3512	4822 051 20563	56k 5% 0.1W
3513	4822 116 52235	1M 5% 0.5W
3516	4822 051 20104	100k 5% 0.1W
3517	4822 051 20104	100k 5% 0.1W
3523	4822 051 20104	100k 5% 0.1W
3524	4822 051 20104	100k 5% 0.1W
3525	4822 051 20332	3k3 5% 0.1W
3526	4822 051 20334	330k 5% 0.1W
3527	4822 051 20473	47k 5% 0.1W
3529	4822 116 52283	4k7 5% 0.5W
3530	4822 051 20152	1k5 5% 0.1W
3531	4822 051 20222	2k2 5% 0.1W
3533	4822 051 10008	0Ω jumper
3534	4822 051 20103	10k 5% 0.1W
3535	4822 051 20103	10k 5% 0.1W
3536	4822 051 10008	0Ω jumper
3602	4822 051 20478	4Ω7 5% 0.1W
3603	4822 116 52256	2k2 5% 0.5W
3604	4822 051 20478	4Ω7 5% 0.1W
3605	4822 051 20222	2k2 5% 0.1W
3606	4822 051 20478	4Ω7 5% 0.1W
3607	4822 051 20478	4Ω7 5% 0.1W
3609	4822 116 52233	10k 5% 0.5W
3700	4822 051 20682	6k8 5% 0.1W
3701	4822 051 20332	3k3 5% 0.1W
3702	4822 051 20393	39k 5% 0.1W
3703	4822 051 20153	15k 5% 0.1W
3704	4822 051 20472	4k7 5% 0.1W
3705	4822 051 20104	100k 5% 0.1W
3707	4822 051 20104	100k 5% 0.1W
3708	4822 051 20104	100k 5% 0.5W
3709	4822 116 52234	100k 5% 0.5W
3710	4822 051 20103	10k 5% 0.1W
3711	4822 051 20473	47k 5% 0.1W
3712	4822 051 20472	4k7 5% 0.1W
3714	4822 116 52211	150Ω 5% 0.5W
3715	4822 051 20562	5k6 5% 0.1W
3716	4822 051 20152	1k5 5% 0.1W
3717	4822 051 20153	15k 5% 0.1W
3718	4822 051 20153	15k 5% 0.1W
3719	4822 051 20152	1k5 5% 0.1W
3720	4822 051 20103	10k 5% 0.1W
3721	4822 051 20472	4k7 5% 0.1W
3722	4822 116 52283	4k7 5% 0.5W
3723	4822 051 20472	4k7 5% 0.1W
3724	4822 051 20472	4k7 5% 0.1W
3725	4822 051 20472	4k7 5% 0.1W
3726	4822 051 20104	100k 5% 0.1W
3728	4822 051 20104	100k 5% 0.1W
3729	4822 051 20472	4k7 5% 0.1W
3730	4822 051 10393	39k 2% 0.25W
3731	4822 051 10393	39k 2% 0.25W
3732	4822 051 20102	1k 5% 0.1W
3733	4822 051 20393	39k 5% 0.1W
3734	4822 116 52277	39k 5% 0.5W
3735	4822 051 20103	10k 5% 0.1W
3736	4822 051 20103	10k 5% 0.1W
3737	4822 051 20103	10k 5% 0.1W
3740	4822 051 10008	0Ω jumper
3742	4822 051 20102	1k 5% 0.1W
3743	4822 051 20103	10k 5% 0.1W
3744	4822 051 20104	100k 5% 0.1W
3750	4822 051 20104	100k 5% 0.1W
3805	4822 051 20682	6k8 5% 0.1W
3806	4822 051 20682	6k8 5% 0.1W
3807	4822 051 20103	10k 5% 0.1W
3808	4822 116 52234	100k 5% 0.5W
3809	4822 051 20222	2k2 5% 0.1W
3810	4822 051 20222	2k2 5% 0.1W
3811	4822 051 20222	2k2 5% 0.1W
3812	4822 051 20222	2k2 5% 0.1W
3813	4822 051 20104	100k 5% 0.1W
3814	4822 051 20104	100k 5% 0.1W
3815	4822 051 20104	100k 5% 0.1W
3816	4822 051 20104	100k 5% 0.1W
3817	4822 051 20683	68k 5% 0.1W
3818	4822 116 52277	39k 5% 0.5W
3819	4822 116 52277	39k 5% 0.5W
3901	4822 051 10102	1k 2% 0.25W
3902	4822 051 10151	150Ω 2% 0.25W
3903	4822 051 10102	1k 2% 0.25W
3904	4822 051 20102	1k 5% 0.1W

3905	4822 051 20101	100Ω 5% 0.1W
3906	4822 116 52224	470Ω 5% 0.5W
3907	4822 051 20682	6k8 5% 0.1W
3908	4822 051 20273	27k 5% 0.1W
3909	4822 051 20472	4k7 5% 0.1W
3910	4822 116 52231	820Ω 5% 0.5W
3911	4822 116 52231	820Ω 5% 0.5W
3912	4822 116 52231	820Ω 5% 0.5W
3913	4822 051 20224	220k 5% 0.1W
3914	4822 051 20222	2k2 5% 0.1W
3915	4822 051 20224	220k 5% 0.1W
3916	4822 051 20224	220k 5% 0.1W
3917	4822 051 20103	10k 5% 0.1W
3918	4822 116 52277	39k 5% 0.5W
3919	4822 051 20103	10k 5% 0.1W
3920	4822 051 20123	12k 5% 0.1W
3921	4822 051 20104	100k 5% 0.1W
3922	4822 051 20104	100k 5% 0.1W
3924	4822 116 52204	1k 5% 0.5W
3925	4822 116 52249	1k8 5% 0.5W
3933	4822 051 10008	0Ω jumper
3935	4822 051 10151	150Ω 2% 0.25W
3936	4822 051 10472	4k7 2% 0.25W
3937	4822 051 10221	220Ω 2% 0.25W
3938	4822 051 10008	0Ω jumper
3939	4822 051 10008	0Ω jumper
3947	4822 051 10399	39Ω 2% 0.25W
3948	4822 051 10569	56Ω 2% 0.25W
3949	4822 051 10102	1k 2% 0.25W
3950	4822 051 10102	1k 2% 0.25W

– Coils –

5000	4822 156 10666	FM-RF
5001	4822 157 60122	4μ7 10%
5002	4822 156 11086	FM-RF
5003	4822 157 63244	FM-OSC
5004	4822 157 63243	FM-IF
5101	4822 157 53473	1000μH 20%
5102	4822 152 20677	10μH 10%
5103	4822 152 20677	10μH 10%
5104	4822 157 53575	3μ3 10%
5105	4822 152 20678	33μH 10%
5106	4822 152 20679	68μH 10%
5108	4822 157 53473	1000μH 20%
5109	4822 152 20682	AM-OSC
5110	4822 152 20678	33μH 10%
5111	4822 152 20683	AM-IFT
5201	4822 156 11081	detector coil
5701	4822 157 53123	100μH 10%
5702	4822 152 20678	33μH 10%
5721	4822 157 53473	1000μH 20%
5901	4822 152 20681	160μH choke

– Semiconductors –

6002	5322 130 34825	BB204G
6003	5322 130 34825	BB204G
6004	5322 130 34825	BB204G
6101	4822 130 30621	1N4148
6102	4822 130 30621	1N4148
6103	5322 130 31684	BB809
6401	4822 130 30621	1N4148
6402	4822 130 30621	1N4148
6501	4822 130 34174	BZX79-C4V7
6502	4822 130 30621	1N4148
6504	4822 130 30621	1N4148
6605	4822 130 30621	1N4148
6713	5322 130 30684	1N4002
6714	4822 130 82574	TL0211 (orange)
6721	4822 130 34174	BZX79-C4V7
6722	4822 130 34173	BZX79-C5V6
6801	4822 130 30621	1N4148
6901	5322 130 31928	BAS16
6904	5322 130 31928	BAS16
6905	4822 130 30621	1N4148
6906	4822 130 34173	BZX79-C5V6
6907	4822 130 34174	BZX79-C4V7
6908	4822 130 34174	BZX79-C4V7
6909	4822 130 80751	1S1885
6911	4822 130 30621	1N4148
6913	5322 130 31928	BAS16
6914	4822 130 34382	BZX79-C8V2
6916	4822 130 30621	1N4148
7000	4822 209 73069	LA1177
7001	4822 130 61183	BF992/01
7002	4822 130 44246	BC549C
7005	5322 130 60068	BC558C
7101	4822 130 62495	2SK507F
7102	4822 209 72247	TEA6200/V1
7201	4822 209 73507	TEA6100N2
7401	4822 209 63887	TDA1591
7402	4822 130 44257	BC547
7403	5322 130 60068	BC558C
7404	4822 130 44257	BC547
7406	4822 130 44257	BC547
7501	4822 209 71871	TA7784P
7503	4822 209 83159	LA2000
7504	4822 130 44257	BC547
7505	4822 130 44257	BC547
7506	4822 130 41204	BSR50
7601	4822 209 72894	TDA1516BQ/N2
7602	4822 209 72894	TDA1516BQ/N2
7701	4822 209 61954	TSA6057/C5
7715	4822 900 10194	X24C04PI (programmed)
7716	4822 209 72042	MC78L05ACP
7717	4822 209 63871	BU5812F
7718	4822 209 72893	PCF8566T
7721	4822 209 63936	TMP47P800N (programmed)
7722	4822 130 44257	BC547
7723	4822 130 44257	BC547
7724	4822 130 44257	BC547
7801	4822 209 62774	TEA6300V4B
7802	4822 130 44257	BC547
7901	4822 130 42615	BC817-40
7902	4822 130 42705	BC847
7903	4822 130 44257	BC547
7904	4822 130 42247	BD137-16
7905	4822 130 40995	BD438
7906	4822 130 41691	BC556B
7907	4822 130 41691	BC556B
7908	4822 130 44257	BC547
7909	4822 130 44257	BC547
7911	4822 130 44257	BC547
7912	4822 130 44257	BC547
7914	4822 130 42705	BC847
7915	4822 130 42615	BC817-40