SANYO

MODEL
8U-P35

All-transistor Radio

Service Manual

SPECIFICATIONS

FREQUENCY RANGE

BC	530 - 1605 kc/s
SW1	2.3 - 7.3 mc/s
SW2	8.0 - 22.0 mc/s

INTERMEDIATE FREQUENCY
455 kc/s

POWER SUPPLY
6 Volts (4 size "C" flashlight battery)

CURRENT DRAIN

No signal	11 mA
Maximum	200 mA

POWER OUTPUT

Undistorted	400 mW
Maximum	700 mW

S/N RATIO
63 μV (at 1 mV/m, 1 mc/s signal input)

SENSITIVITY (For 10mW output)

BC	31 μV/m
SW1	22 μV/m
SW2	3.1 μV

LOUD SPEAKER
3½″ Permanent dynamic speaker (7 ohms)

TRANSISTORS

(1) 2SA222	Mixer
(2) 2SA222	Local oscillator
(3) 2SA322	1st IF amplifier
(4) 2SA203	2nd IF amplifier
(5) 2SB185	1st AF amplifier
(6) 2SB186	2nd AF amplifier
(7) 2SB22 × 2	Power amplifier (Class B push-pull)

DIODE & THERMISTORS
(1) 1S188 Diode ; Detector & AGC
(2) SDT-09 Thermistor ; Temperature compensator
(3) SDT-1000 Thermistor ; Themperature compensator

DIMENTIONS
Width 9½″
Height 5″
Depth 2″

WEIGHT 1.9 lbs.

SANYO ELECTRIC CO., LTD.

PART NO.	STOCK NO.	DESCRIPTION

TRANSISTORS

Tr 1	2SA222	Mixer
Tr 2	2SA222	Local oscillator
Tr 3	2SA322	1st IF amplifier
Tr 4	2SA203	2nd IF amplifier
Tr 5	2SB185	1st AF amplifier
Tr 6	2SB186	2nd AF amplifier
Tr 7	2SB22	Power amplifier Class B push-pull
Tr 8	2SB22	Power amplifier Class B push-pull

DIODE & THERMISTORS

	1S188	Detector & AGC
	SDT-09	Temperature compensator
	SDT-1000	Temperature compensator

COILS

L 1	R-W2113	SW2 Antenna coil
L2, L3	R-W2184	BC & SW1 Antenna coil
L 4	R-W8055	SW2 Oscillator coil
L 5	R-W8054	SW1 Oscillator coil
L 6	R-W8117	BC Oscillator coil

TRANSFORMERS

T 1	R-W5T008	1st IF transformer
T 2	R-W5T009	2nd IF transformer
T 3	R-W5T043	3rd IF transformer
T 4	R-W6219	Input transformer
T 5	R-W6220	Output transformer

CONTROLS

	R-R11620a	On-Off & Volume Control
	R-R11006	Semi fixed resistor 50K ohms
	R-C1029a	Tuning capacitor
	R-C0013	2 block trimmer
	R-C1070	Fine tuning capacitor
	R-S4124	Band selector

LOUD SPEAKER

	R-S6165	3½″ Permanent dynamic speaker

ELECTOLYTIC CAPACITOR

C 14		100 μF	6 WV
C 15		30 μF	3 WV
C 16		30 μF	3 WV
C 19		10 μF	3 WV
C 20		10 μF	3 WV
C 21		200 μF	6 WV
C 24		100 μF	6 WV
C 29		30 μF	3 WV

FIXED CAPACITORS

C 1		10 pF	± 10%	50WV
C 4		.004 μF	+ 30–20%	50WV
C 5		.003 μF	〃	〃
C 6		4300 pF	± 10%	35WV
C 7		1200 pF	〃	〃
C 8		330 pF	± 10%	〃
C 9		500 pF	+ 30–20%	50WV
C 10		.0015 μF	〃	〃
C 11		.005 μF	〃	〃
C 12		.04 μF	+ 80–20%	〃
C 13		.01 μF	+ 30–20%	〃
C 17		5 pF	± 0.5 pF	〃
C 18		10 pF	± 10%	〃
C 22		.0075 μF	+ 30–20%	〃
C 23		.0075 μF	〃	〃
C 25		5 pF	± 0.5 pF	〃
C 27		.01 μF	+ 30–20%	〃
C 28		.05 μF	+ 80–20%	10WV
C 30		.04 μF	〃	50WV
C 31		5 pF	± 0.5 pF	〃
C 32		.05 μF	+ 80–20%	10WV
C 33		.003 μF	+ 30–20%	50WV
C 34		.05 μF	+ 80–20%	10WV

PART NO.	STOCK NO.	DESCRIPTION

FIXED RESISTORS

R 1		5.6 Kohms	± 10%	¼ W
R 2		1.5 〃	〃	½ W
R 3		22 〃	〃	〃
R 4		1.2 〃	〃	〃
R 5		4.7 〃	〃	〃
R 6		82 〃	〃	〃
R 7		1 〃	〃	〃
R 8		47 〃	〃	〃
R 9		5.6 〃	〃	〃
R 10		150 ohms	〃	〃
R 11		22 Kohms	〃	〃
R 12		6.8 〃	〃	〃
R 13		120 ohms	〃	〃
R 14		100 〃	± 20%	〃
R 15		1.8 Kohms	± 5%	¼ W
R 16		91 ohms	〃	〃
R 17		3.3 〃	〃	〃
R 18		1 Kohms	± 10%	½ W
R 19		39 〃	〃	〃
R 20		82 〃	〃	〃
R 21		220 〃	〃	¼ W
R 22		100 ohms	〃	½ W
R 23		390 〃	〃	〃
R 24		3.9 Kohms	〃	〃
R 25		56 〃	〃	¼ W

CABINET & MISCELLANEOUS

	R-31525	Cabinet
	R-31526	Back cover
	R-32351a	Dial panel – Polystyrole
	R-28054	Decoration metal
	R-26775	Punching metal
	R-23668	Metal strip
	R-26776	Back screen
	R-26777	Rating plate
	R-26778	Badge – All wave DeLuxe
	R-23679	Badge – SANYO –
	R-S8708	Pointer (Comp.)
	R-39113	Handle
	R-28056	Band selector knob
	R-47106	Battery instruction sheet
	R-35173	Battery cover
	R-33400	Tuning knob
	R-39111	Volume control knob
	R-33404	Fine tuning knob
	R-33226	Drum
	R-15041	Coil spring
	R-24153b	Pulley shaft
	R-24497	Pulley
		Rope 0.5 φ
	R-S4124	Band selector
	R-S8354	Battery terminal (Comp.)
	R-S8353	Battery terminal (Comp.)
	R-S2025b	Socket
	R-S2081a	Socket
	R-S8614	Plug (Comp.)
	R-S6250	Earphone (Comp.)

SPECIFICATIONS SUBJECT TO CHANGE WITHOUT NOTICE.

Printed in Japan

CIRCUIT DIAGRAM

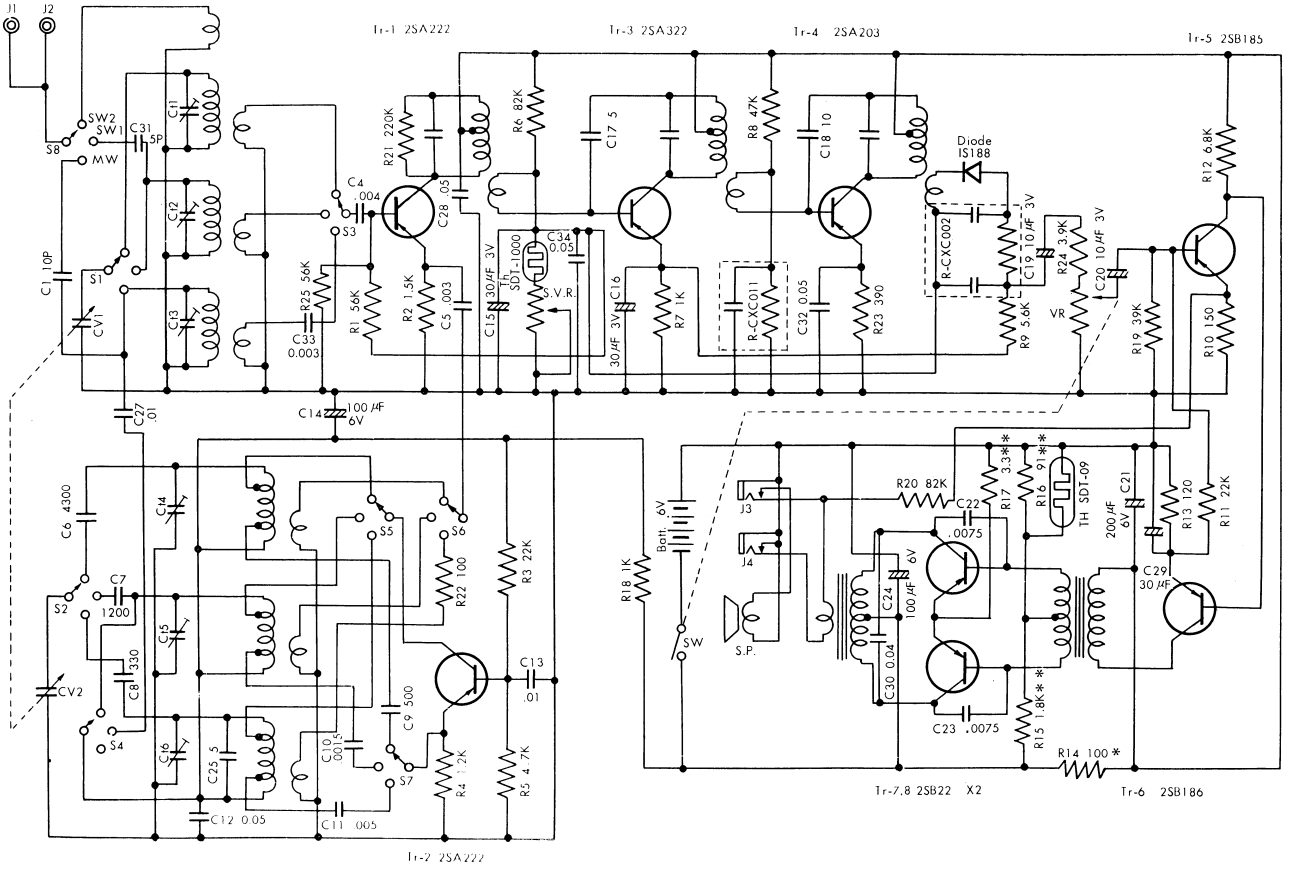

ALIGNMENT PROCEDURES

Apply volt-meter across the voice coil. Volume control should be at maximum position. Output of signal generator should be no higher than necessary to obtain output reading.

STEP	SIGNAL GENERATOR COUPLING	SIGNAL GENERATOR FREQUENCY	RADIO DIAL SETTING	ADJUST FOR MAXIMUM OUTPUT
IF ALIGNMENT				
1	Radiate signal thru the loop antenna, which connected with signal generator output cable.	455 kc	540 kc	IF transformer T 3 T 2 T 1
BROADCAST RF ALIGNMENT				
2	Radiate signal thru the loop antenna, which connected with signal generator output cable.	515 kc	left end	BC osc. coil L6
3		1650 kc	right end	BC osc. trimmer Ct6
4		Repeat steps 2 and 3.		
5		600 kc	600 kc	BC ant coil L3
6		1400 kc	1400 kc	BC ant trimmer Ct3
7		Repeat steps 5 and 6.		
SHORTWAVE 1 RF ALIGNMENT				
8	Radiate signal thru the loop antenna, which connected with signal generator output cable.	2.25 mc	left end	SW1 osc coil L5
9		7.5 mc	right end	SW1 osc trimmer Ct5
10		Repeat steps 8 and 9.		
11		2.5 mc	2.5 mc	SW1 ant osc coil L2
12		6.5 mc	6.5 mc	SW1 ant trimmer Ct2
13		Repeat steps 11 and 12.		
SHORTWAVE 2 RF ALIGNMENT				
14	Inject signal through the dummy antenna, which connected with signal generator output cable.	7.5 mc	left end	SW2 osc coil L4
15		22.8 mc	right end	SW2 osc trimmer Ct4
16		Repeat steps 14 and 15.		
17		8.5 mc	8.5 mc	SW2 ant coil L1
18		21.0 mc	21.0 mc	SW2 ant trimmer Ct1
19		Repeat steps 17 and 18.		

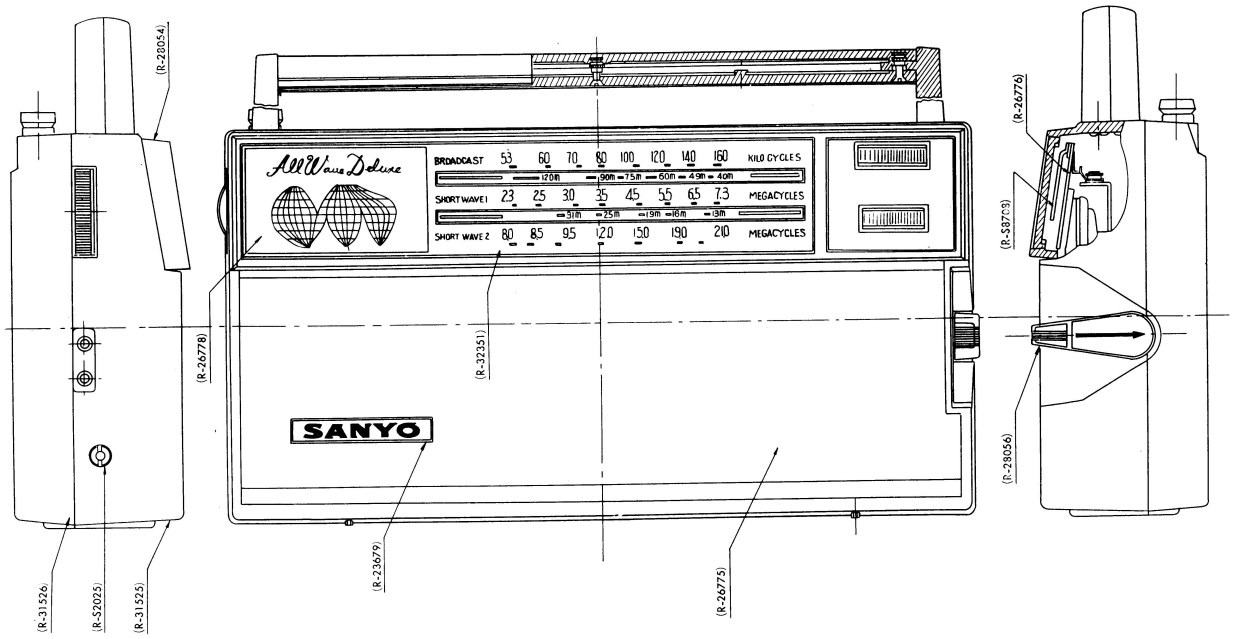
All Wave Deluxe
BROADCAST 53 60 70 80 100 120 140 160 KILO CYCLES
120m 90m 75m 60m 49m 40m
SHORT WAVE 1 2.3 2.5 3.0 3.5 4.5 5.5 6.5 7.3 MEGACYCLES
31m 25m 19m 16m 13m
SHORT WAVE 2 80 85 95 120 150 190 210 MEGACYCLES
SANYO
(R-28054)
(R-26778)
(R-32351)
(R-23679)
(R-26775)
(R-26776)
(R-58773)
(R-28056)
(R-31526)
(R-52025)
(R-31525)

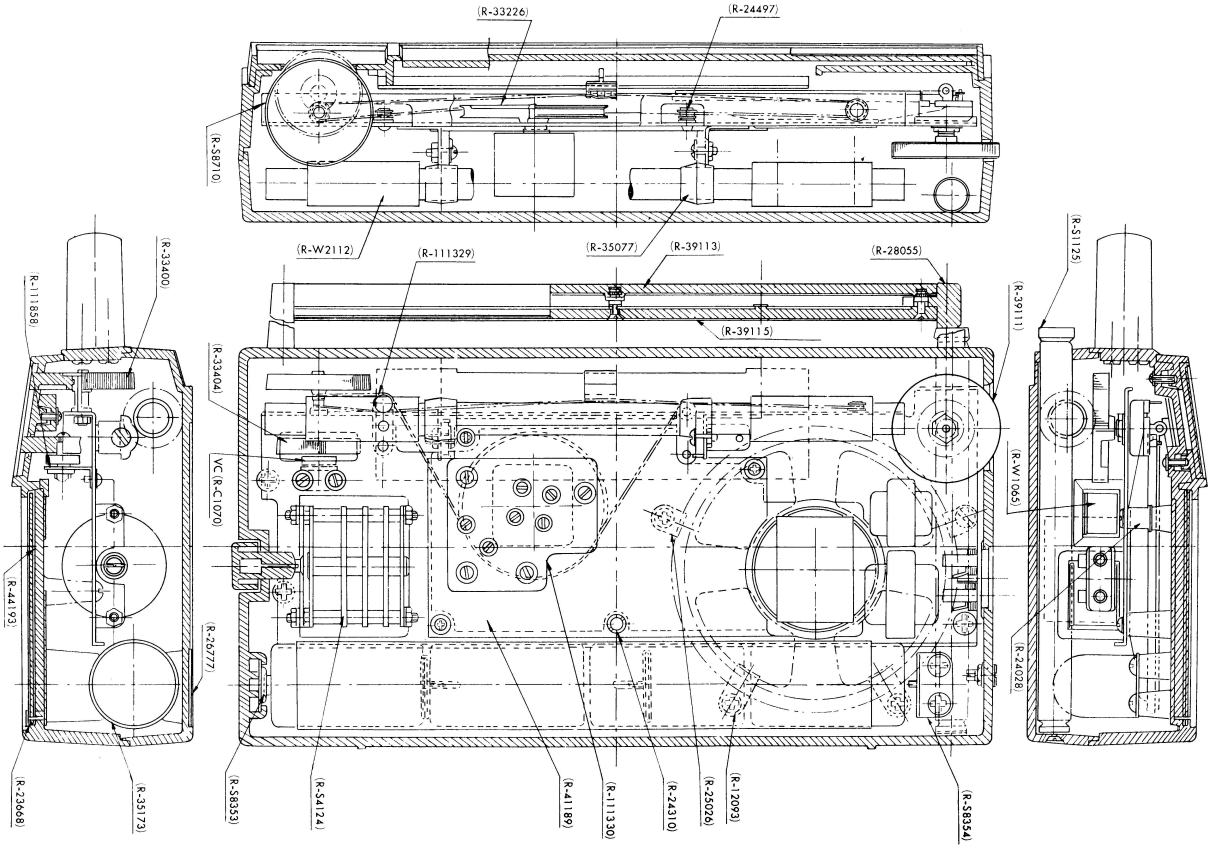
(R-33226)
(R-24497)
(R-58710)
(R-W2112)
(R-111329)
(R-35077)
(R-39113)
(R-28055)
(R-39115)
(R-33400)
(R-111858)
(R-33404)
VC (R-C1070)
(R-26777)
(R-44192)
(R-23668)
(R-35173)
(R-58353)
(R-54124)
(R-41189)
(R-111330)
(R-24310)
(R-25026)
(R-12093)
(R-58354)
(R-51125)
(R-39111)
(R-VV1065)
(R-24028)

MAIN PARTS CONNECTION

Antenna Coil

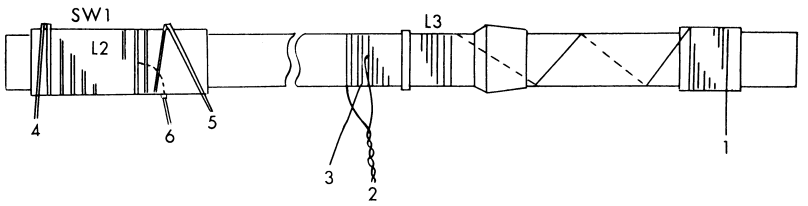

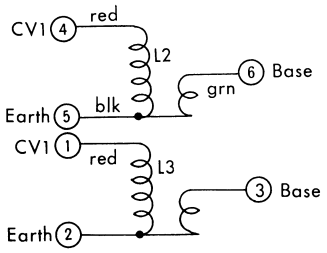

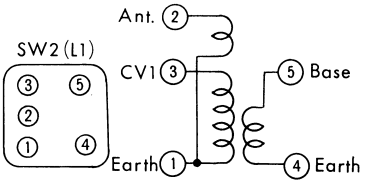

OSC Coil (L4, L5)

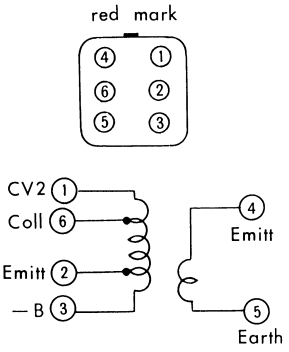

IF transformer

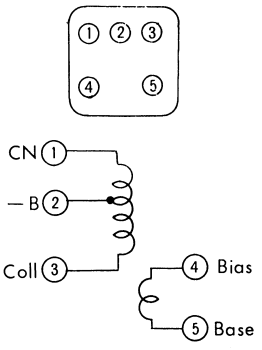

BC OSC Coil (L6)

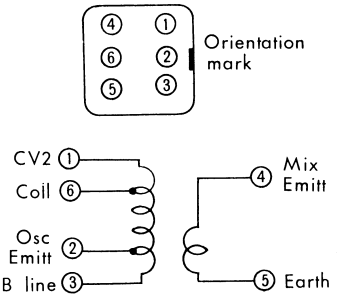

Input transformer

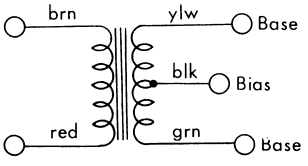

1K: 1K ohms

Output transformer

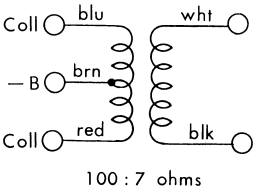

100 : 7 ohms

Variable capacitor

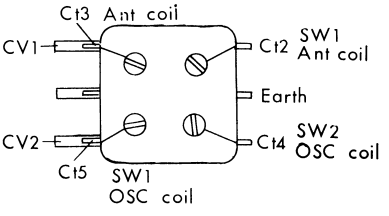

PARTS LOCATION

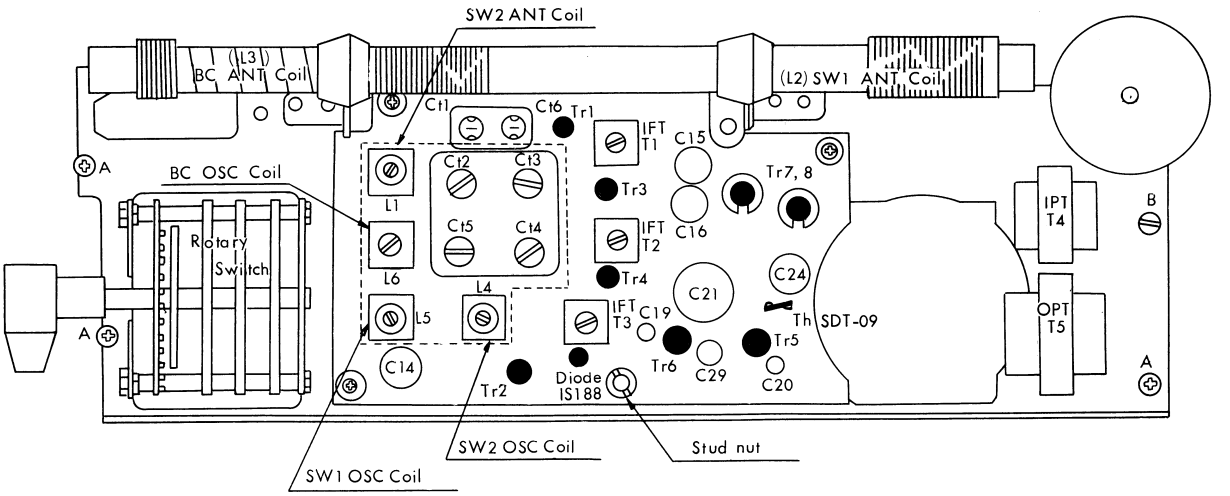
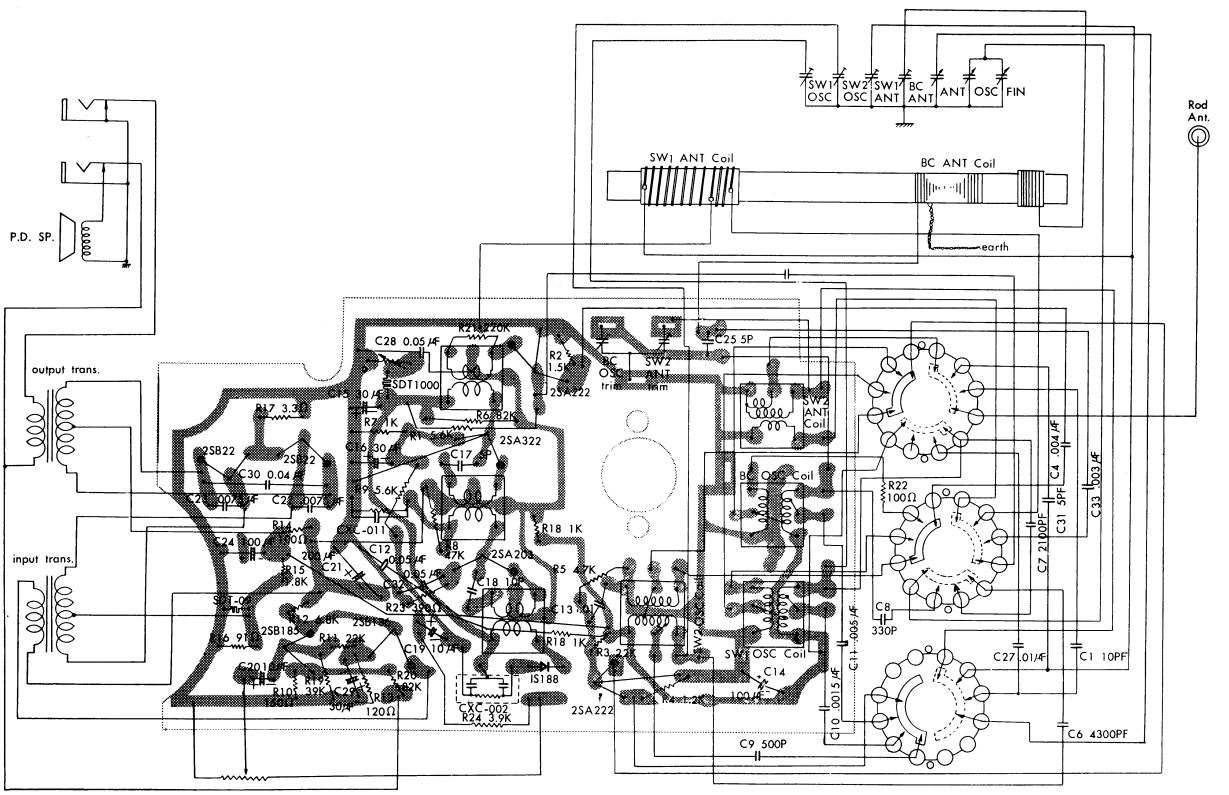
INTER PARTS LOCATION