SANYO

7-Transistor Portable Radio

MODEL 7C-031

SERVICE MANUAL

SANYO ELECTRIC CO., LTD.
INTERNATIONAL DIVISION : SANYO ELECTRIC TRADING CO., LTD.
OSAKA, JAPAN

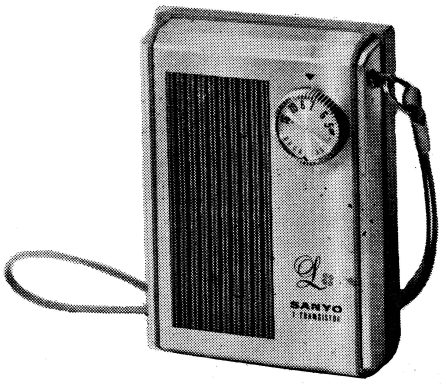

SPECIFICATIONS

Frequency Range ..... 530 – 1,605 Kc
Intermediate Frequency ..... 455 Kc
Transistors ..... 2SA202×1 Frequency converter
2SA202×1 1st IF amplifier
2SA203×1 2nd IF amplifier
2SC537×1 1st AF amplifier
2SB185×1 2nd AF amplifier
2SB 22×2 Power amplifier
Diode ..... 1S188 ×1 Detector & AGC
Radiation Sensitivity ..... 10mW output 200μV/m

Output Power ..... Undistorted 70 mW
Maximum 120 mW
Signal to Noise ratio ..... 50mW output at 1mV/m input 23 dB
Current Drain ..... No signal 12 mA
Maximum 64 mA
Loudspeaker ..... 2″ permanent dynamic speaker
Voice coil impedance 8 ohms
Battery ..... 3V : UM-3 × 2
Dimensions ..... 2½″ wide × 3 9/16″ high × 1 3/16″ deep
(64×90×30mm)
Weight ..... 0.37 lb (154 gr.)

ALIGNMENT PROCEDURES

IF & RF alignment

Apply volt-meter across voice coil.
Volume control should be at maximum position.
Output of signal generator should be no higher than necessary to obtain proper output reading in order to avoid AGC function,

STEP	SIGNAL GENERATOR COUPLING	SIGNAL GENERATOR FREQUENCY	RADIO DIAL SETTING	ADJUST FOR MAXIMUM OUTPUT
IF Alignment				
1	Radiate signal through the loop antenna, which connected with signal generator output cable.	455 Kc	Lower end	T-1 T-2 T-3
RF Alignment				
2	Radiate signal through the loop antenna, which connected with signal generator output cable.	530 Kc	Lower end	L-2
3		1605 Kc	Upper end	BC osc. trim. Ct-2
4		Repeat steps 2 and 3		
5		600 Kc	600 Kc	L-1
6		1400 Kc		BC ant. trim. Ct-1
7		Repeat steps 5 and 6		

PARTS LIST

STOCK NO.	DESCRIPTION	Q'TY
CABINET PROPORTION		
R-395075a	Cabinet	1
R-24654	Insert nut (Cabinet)	1
R-395076	Back cover	1
R-265432	Front decoration metal	1
R-265433	Decoration metal (Left side)	1
R-265434	〃 (Right side)	1
R-475512	Specification sheet	1
	Battery cushion	1
	Net	1
	Net (Back cover)	1
R-435052	Net (Speaker)	1
R-365071	Battery sheet	1
R-25068	Speaker clip metal	1
R-245208	Stud nut	1
R-395077	Tuning knob	1
R-245225	Stud nut (Cabinet & P. C. board)	1
R-265435	Dial	1
R-S85162	Hand strap	1
R-355156	Washer (TU. knob)	1
CHASSIS PROPORTION		
R-325147	Volume knob	1
R-415169	Printed circuit board	1
R-325148	Earphone socket fixing plastic part	1
R-245226	Tuning shaft	1
R-325170	Fixing plastic part (Antenna coil)	1
R-365055	Antenna coil cover	1

STOCK NO.	DESCRIPTION		Q'TY
ELECTRIC RARTS PROPORTION			
R-W2577	Antenna coil	L-1	1
R-C1031	Variable capacitor or R-C1503	Cv-1, 2	1
R-W8535a	OSC coil	L-2	1
R-W5T531	IF. trans.	T-1	1
R-W5T532	〃	T-2	1
R-W5T533	〃	T-3	1
R-R110506	Variable resistor		1
R-W6569	Input trans.	T-4	1
R-S6566	Speaker 8 ohms 50∅		1
R-S6560	Earphone		1
R-S2107	Earphone socket		1
R-S85227	Battery terminal(lead joint)		1
R-S85228	〃		1
ELECTRORYTIC CAPACITORS			
R-C9561	Electrolytic capacitor (3V/30μF)	C11	1
R-C9556	〃 (6V/5μF)	C10	1
R-C9081b	〃 (9V/50μF)	C3	1
R-C9547	〃 (3V/100μF)	C13	1
R-C9086a	〃 (6V/120μF)	C14	1

STOCK NO.	DESCRIPTION		Q'TY
TRANSISTORS PROPORTION			
2SA202	Transistor	Tr-1	1
2SA202	〃	Tr-2	1
2SA203	〃	Tr-3	1
2SC537	〃	Tr-4	1
2SB185	〃	Tr-5	1
2SB22		Tr-6, 7	2
1S188	Diode	D-1	1

FIXED RESISTORS					
R1	5.6 k ohms	±10%	¼W	Solid or	1
R2	15 k ohms	〃	〃	Carbon	1
R3	2.2 k ohms	〃	〃	〃	1
R4	47 k ohms	〃	〃	〃	1
R5	560 ohms	〃	〃	〃	1
R6	390 ohms	〃	〃	〃	1
R7	220 ohms	〃	〃	〃	1
R8	6.8 k ohms	〃	〃	〃	1
R9	12 k ohms	〃	〃	〃	1
R19	10 k ohms	〃	〃	〃	1
R10	1 k ohms	〃	〃	〃	1
R11	47 ohms	±20%	〃	〃	1
R12, 15	120 ohms	±10%	〃	〃	2
R13, 14	820 ohms	〃	〃	〃	2
CAPACITORS					
C8	0.022 μF	±20%	35WV	Mylar	1
C2	0.01 μF	〃	〃	〃	1
C1	0.0068 μF	〃	50WV	〃	1
C9, 12	0.005 μF	〃	〃	〃	2
C4, 6	0.04 μF	+80−20%	25WV	Ceramic	2
C7	10 pF	±10%	50WV	〃	1
C5	16 pF	〃	〃	〃	1

Hexagon screw (2×4)	Cabinet−Stud nut	1
Pan head tapping screw (2.3×10)	Cabinet−Fixing plastic	1
Round head screw (2×4)	P.C.board−Stud nut	2
Hexagon nut (M2.6)	Cabinet−Hand strap	1
Round head screw (2.6×3)	VC.	2
〃 (1.7×5)	VR. knob	1
〃 (2.6×10)	TU. shaft−VC.	1

6-20095 Printed in Japan

MAIN PARTS CONNECTION

Antenna coil (L-1)

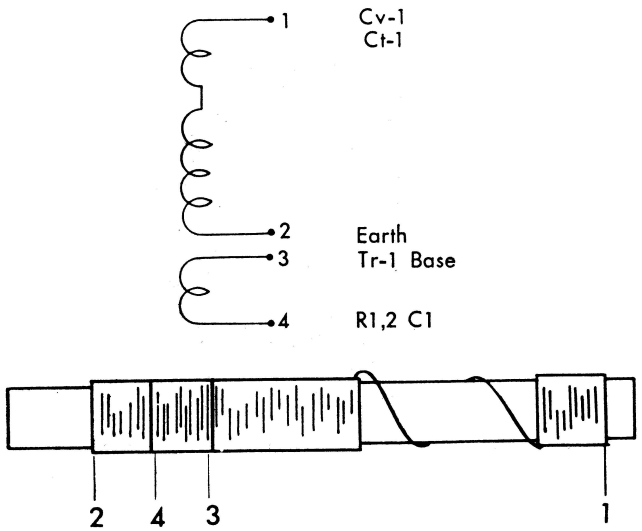

Input trans (T-4)

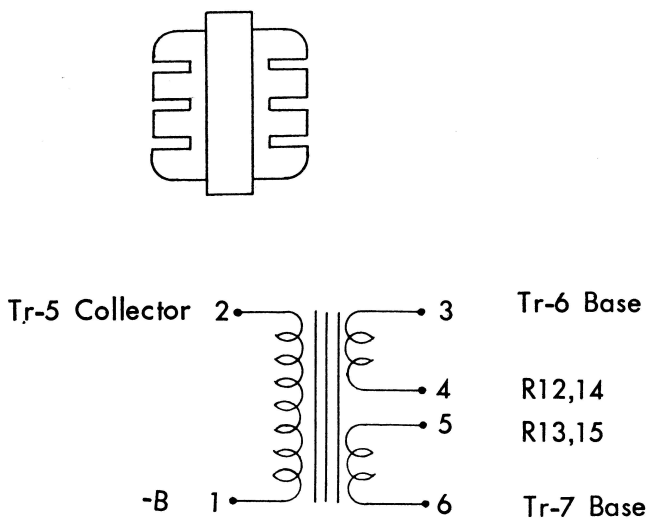

MAIN PARTS LOCATION

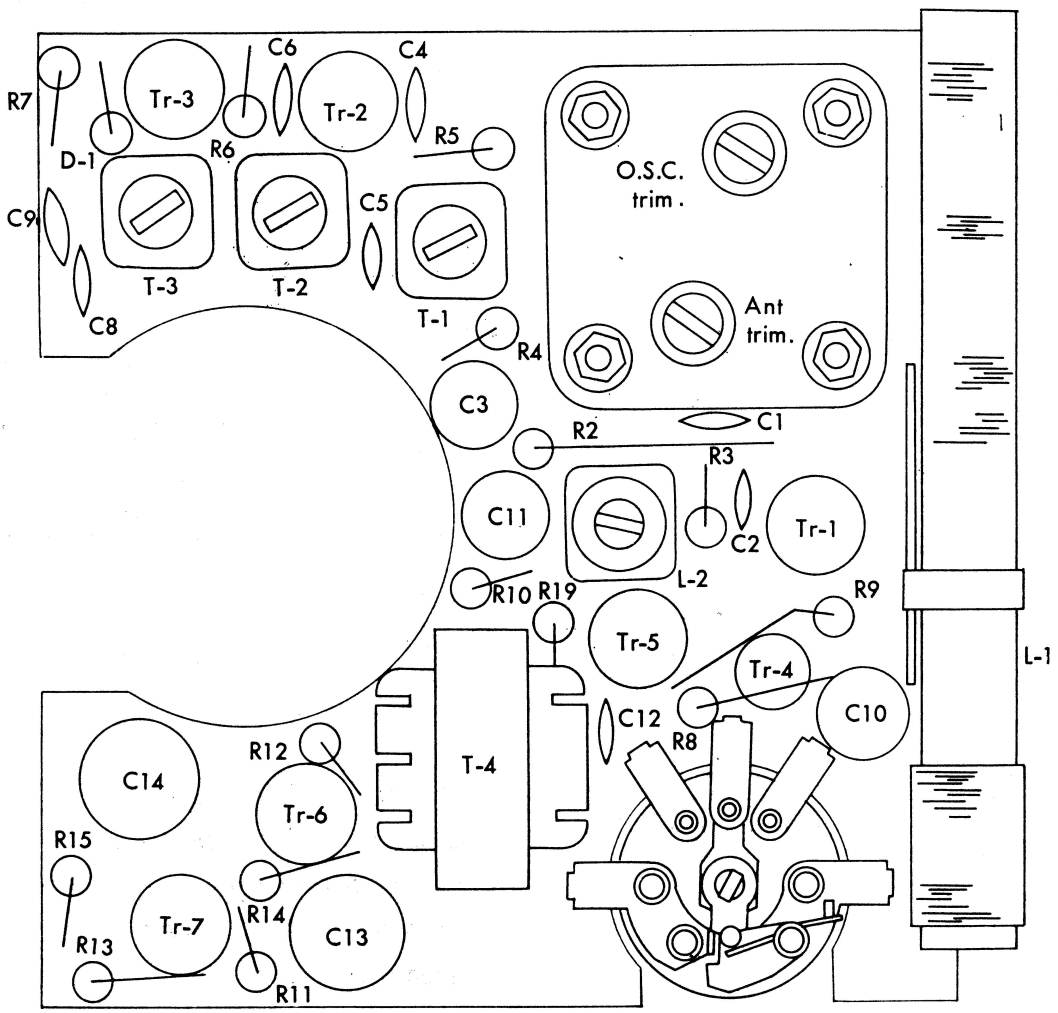

MAIN PARTS WIRING

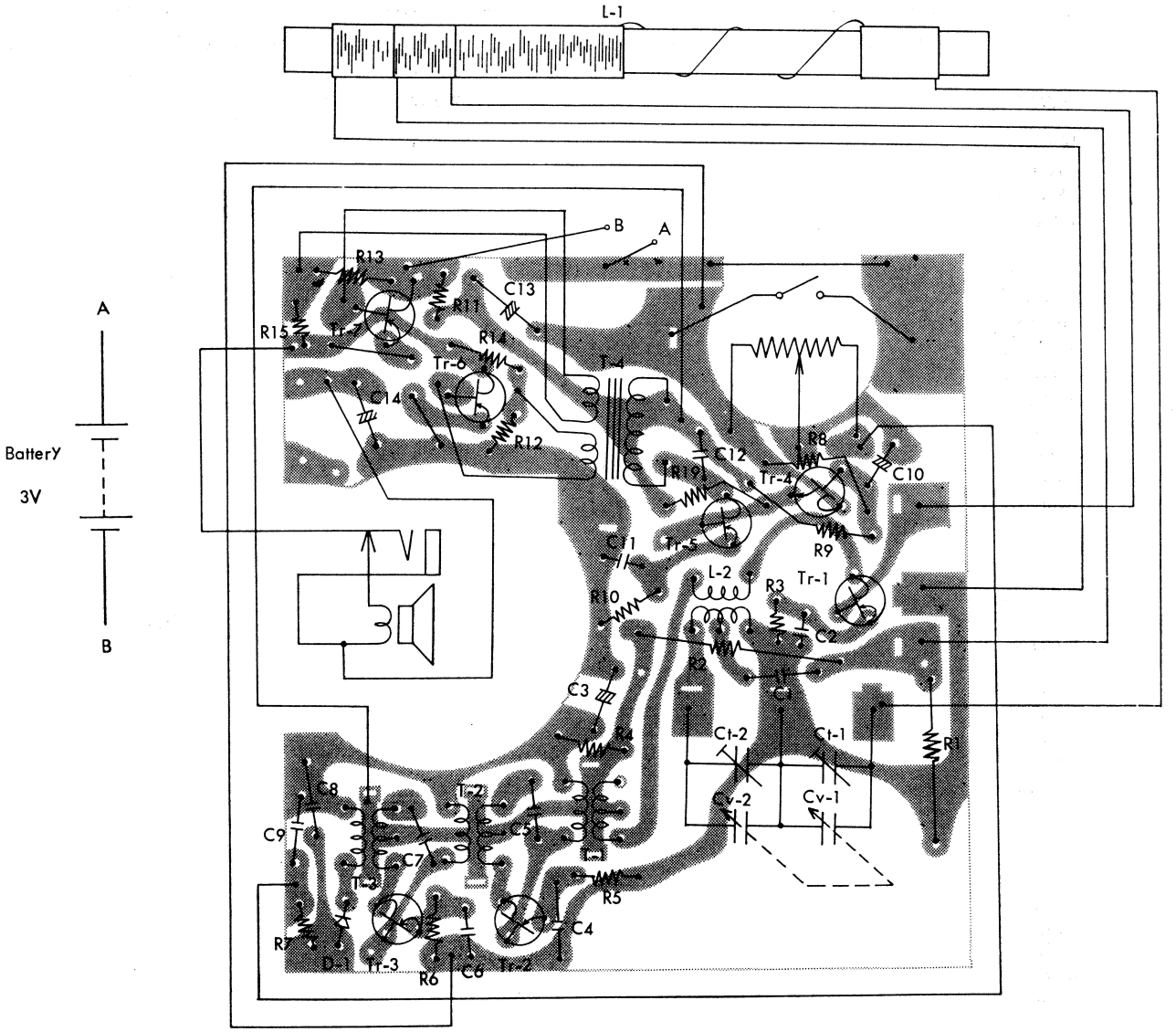

CIRCUIT DIAGRAM

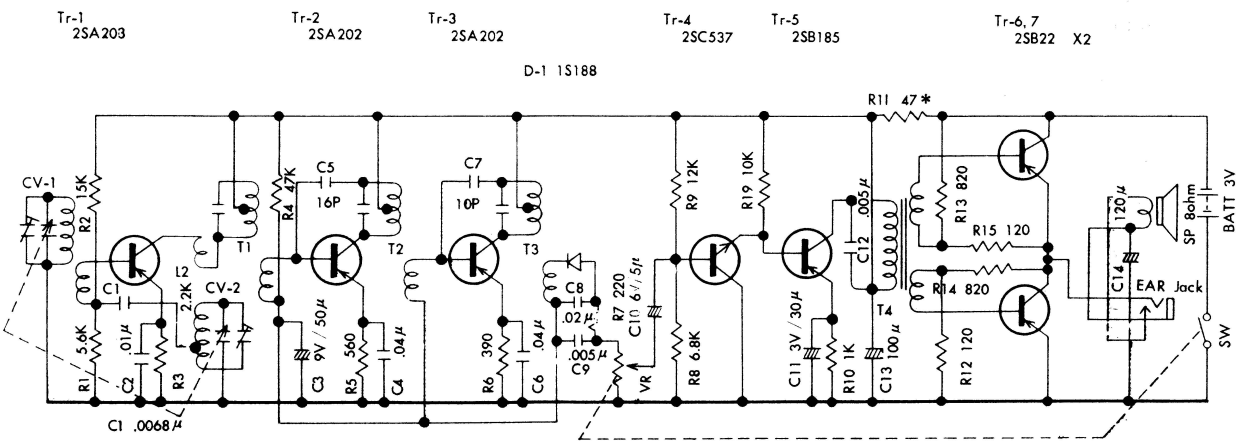

NOTE

All resistance values in "ohms". Allowance ∗Mark; 20% nomark; 10% All capasitance values in F(fared) pf=uuF