ALPINE SERVICE MANUAL

DIGITAL TUNER
CASSETTE

- Concerning the contents not to be given in this manual, refer to the service manual (68P80579F02).

- Serial Numbers after
  No. 80312301-B for 7385E CODE02 model
  No. 80515001-C for 7385L CODE02 model
  No. 80316501-A for 7385M CODE02 model

- For the cassette deck mechanism pars of this model, refer to the GZ Series (GZ75E230) Service Manual (68P80518F02).

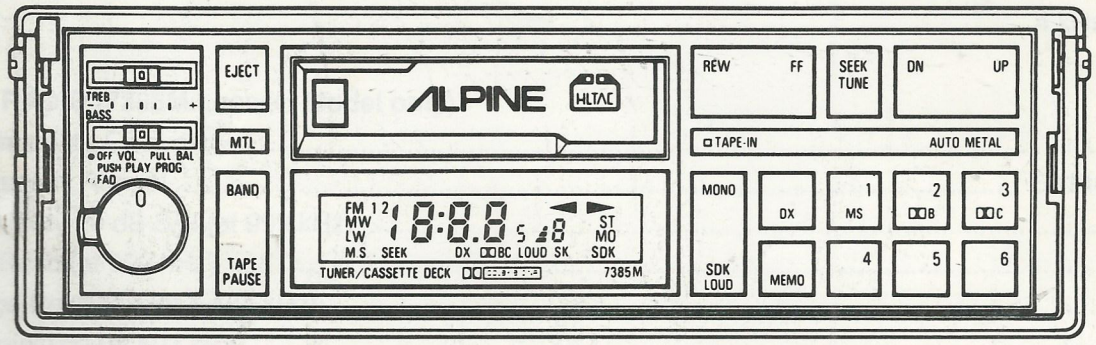

Model 7385MCODE02

7385M/L/E
CODE 02

Contents

Specifications 3
Block Diagram ..... 5 to 7
Schematic Diagram (7385M/7385L CODE02 model only) ..... 8 to 14
Schematic Diagram (7385E CODE02 model only) ..... 15 to 18
Schematic Diagram (Tape Mechanism) ..... 19 to 20
Wiring Diagram and Parts Layout on P.C. Board ..... 23 to 26
Wiring Diagram and Parts Layout on P.C. Board ..... 27 to 30
Electrical Parts List ..... 31 to 49
Cabinet Assembly Parts List (7385M/7385L CODE02 model only) 50
Exploded View (Cabinet) (7385M/7385L CODE02 model only) ..... 51 to 52
Exploded View (Cabinet) (7385E CODE02 model only) ..... 53 to 54
Cabinet Assembly Parts List (7385E CODE02 model only) 55
Packing Method View 56
Packing Assembly Parts List 57

Specifications

FM RADIO

Intermediate Frequency	10.7±0.1 MHz
Frequency Range	87.5 to 108 MHz
Usable Sensitivity (Stereo at 98.1 MHz)	19.2 dBf
Limiting Sensitivity (98.1 MHz)	14.2±3 dBf
S/N Ratio (Setereo 60 dBu 98.1 MHz)	50dB (7385M/L CODE02 Model only)
	48dB (7385E CODE02 Model only)
Image Rejection (at 106.1 MHz)	40 dB
IF Rejection (at 90.1 MHz)	60 dB
Distortion (Input 1 mV at 98.1 MHz)	1%
Frequency Response (Ref. 400Hz) (7385M/L CODE02 Model only)	100Hz : 0±3 dB
	10 kHz : -12±3 dB
Frequency Response (Ref. 400Hz) (7385E CODE02 Model only)	80Hz : 0±3 dB
	10 kHz : -12±3 dB
Stereo Separation (at 1,000 Hz)	25 dB
SK Sensitivity (at 98.1 MHz)	25.2 dBf (7385M CODE02 Model only)

AM RADIO (7385E CODE02 Model only)

Intermediate Frequency	450 kHz
Frequency Range	531 to 1,602 kHz
Sensitivity 20 dB S/N (at 999 kHz)	45.2 dBf
S/N Ratio (at 999 kHz)	44 dB
Image Rejection (at 1,404 kHz)	50 dB
IF Rejection (at 603 kHz)	60 dB
Distortion (at 999 kHz)	1%
Frequency Response (999 kHz at Ref. 400 Hz)	100 Hz : -3±5 dB
	4 kHz : -15±5 dB

MW RADIO (7385M/L CODE02 Model only)

Intermediate Frequency	459 ±5 kHz
Frequency Range	531 to 1,602 kHz
Sensitivity 20 dB S/N (at 999 kHz)	44.2 dBf
S/N Ratio (at 999 kHz)	44 dB
Image Rejection (at 1,404 kHz)	45 dB
IF Rejection (at 603 kHz)	60 dB
Distortion (at 999 kHz)	1%
Frequency Response (999 kHz at Ref. 400 Hz)	100Hz : -3±3 dB (7385L CODE02 Model only)
	100 Hz : -3±5 dB (7385M CODE02 Model only)
	4 kHz : -15±6 dB

LW RADIO (7385M/LCODE02 Model only)

Intermediate Frequency	459 ±5 kHz
Frequency Range	153 to 281 kHz
Sensitivity 20 dB S/N (at 218 kHz)	52.2 dBf
S/N Ratio (at 218 kHz)	40 dB
Image Rejection (at 272 kHZ)	40 dB
IF Rejection (at 218 kHz)	50 dB
Distortion (at 218 kHz)	1.5%
Frequency Response (Ref. 400 Hz)	100 Hz : -3±3 dB
	4 kHz : -17±6dB

TAPE PLAYER

Wow & Flutter (JIS, WARMS/MTT-111)	0.15%
Tape Speed (MTT-111)	4.75 cm/sec. +3 to -1%
Signal to Noise Ratio	
Dolby OFF (MTT-112)	50 dB (7385M/LCODE02 Model only)
Dolby OFF (MTT-112)	52 dB (7385ECODE02 Model only)
Dolby B	58 dB (7385M/LCODE02 Model only)
Dolby B	60 dB (7385ECODE02 Model only)
Dolby C	65 dB
Distortion (MTT-118)	2.5%
Frequency Response	
(Ref. 1 kHz, -3 dB, MTT-256)	50 Hz to 18 kHz (7385M/LCODE02 Model only)
(Ref. 315 Hz, -3 dB, MTT-256)	50 Hz to 18 kHz (7385ECODE02 Model only)
Separation (MTT-141)	30 dB
Crosstalk (MTT-121)	45 dB
FF & RWD Time (C-60)	100 sec

GENERAL

Load Impedence	10k ohm
Power Supply	14.4V DC (7385M/LCODE02 Model only)
	14V DC (7385ECODE02 Model only)
Pre Output Voltage (MTT-212)	1,200 mV ±3 dB (7385M/LCODE02 Model only)
	1,200 mV (7385ECODE02 Model only)
Semiconductors	15 ICs, 60 Transistors, 55 Diodes, 21 Zener Diodes (7385MCODE02 Model only)
	13 ICs, 47 Transistors, 46 Diodes, 19 Zener Diodes (7385LCODE02 Model only)
	12 ICs, 50 Transistors, 35 Diodes, 16 Zener Diodes (7385ECODE02 Model only)
Chassis Dimension (WxHxD)	178x50x153 mm
Nose Dimension (WxHxD)	178x50x15 mm
Weight	1.7 kg

Block Diagram (7385M CODE02)

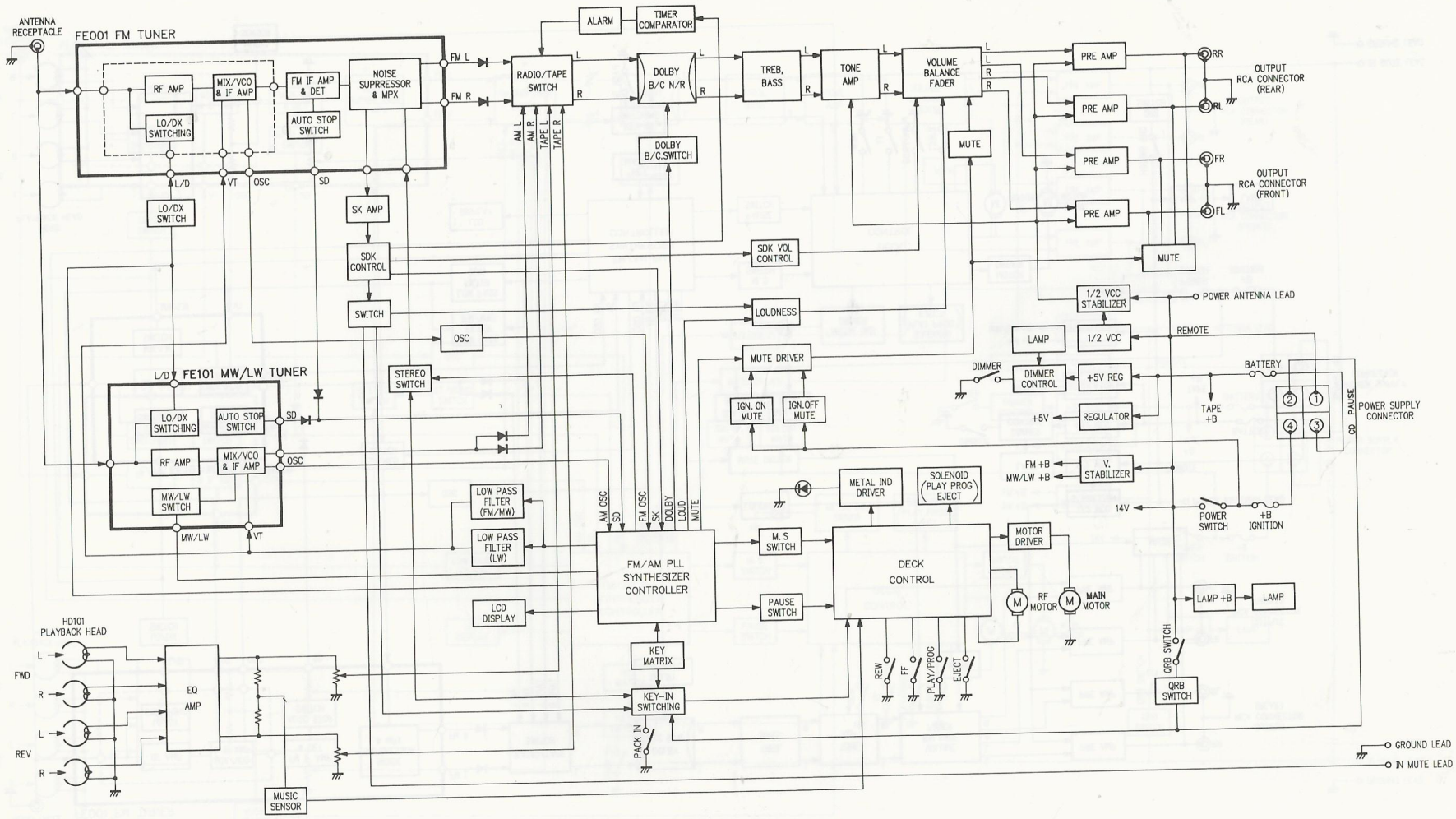

Block Diagram (7385L CODE02)

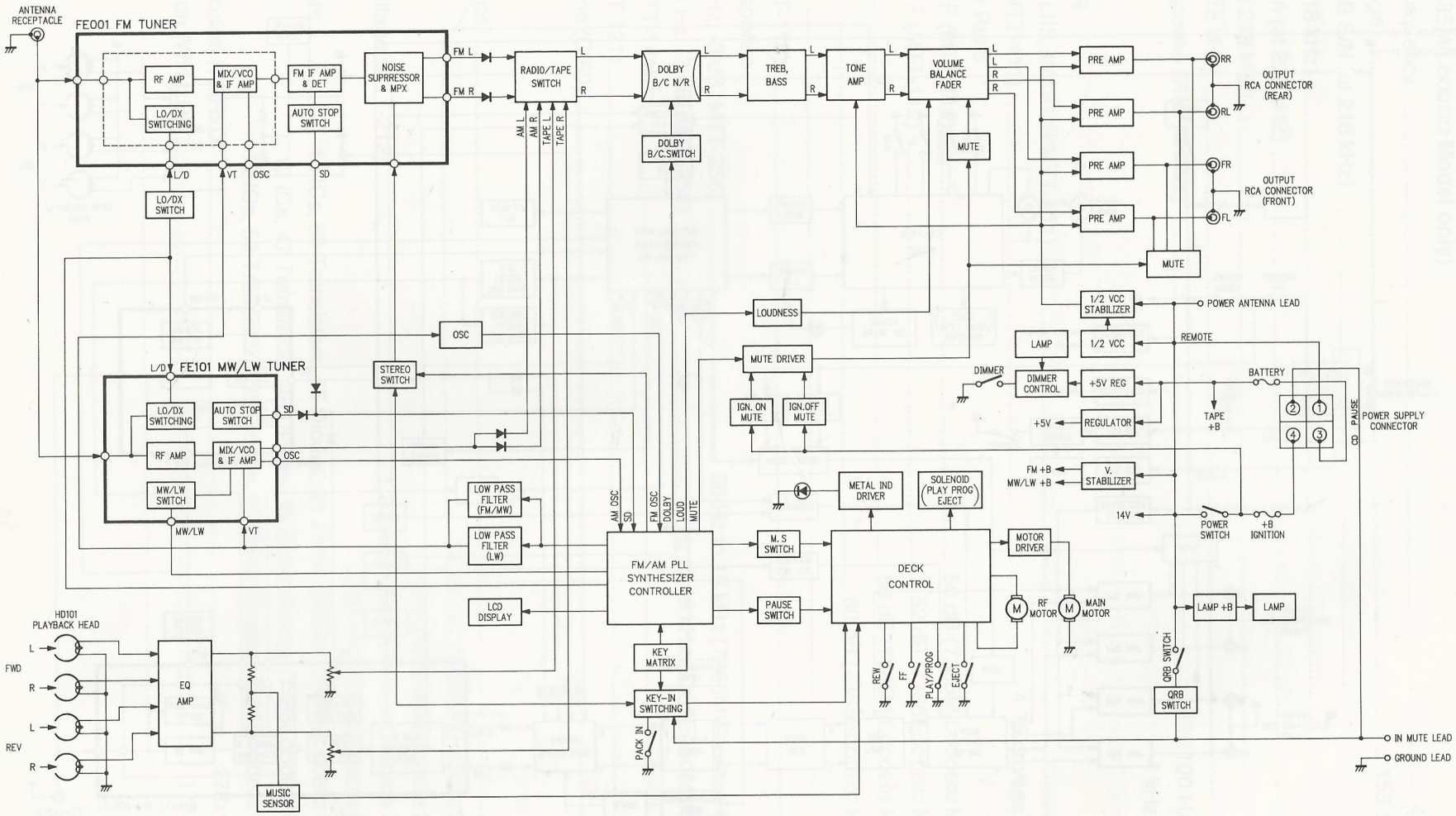

Block Diagram (7385E CODE02)

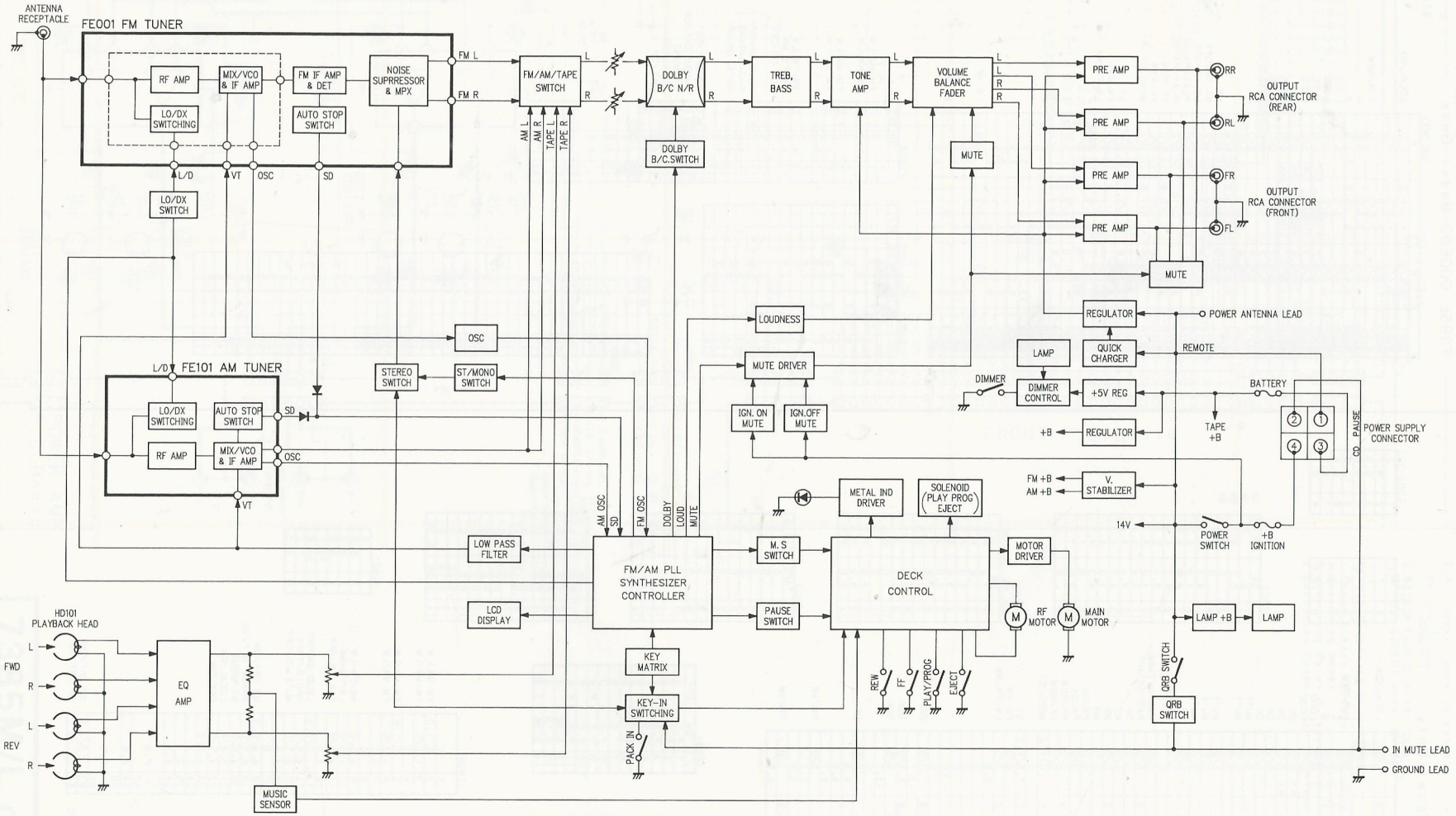

7385M CODE02 Model Only

(ON/OFF)

	B	C	E	
Q001	3.5/0	0/7.5	0/0	LOCAL/DX
Q002	0.7	7.9	0	
Q003	1.7	5.9	1.1	
Q101	0/14	7.6/0	0/0	FOR/REW
Q202	4.5/0	0/3.3	0/0	C
Q203	4.5/0	0/9.5	0/0	B
Q301-1	2.4/0	0/0	0/0	LOUD
Q301-2	2.4/0	0/0	0/0	LOUD
Q303	0.7/0	0/0	0/0	DK
Q304	0.7/0	0/0	0/0	DK
Q305	0.7/0	0/0	0/0	DK
Q306	0.7/0	0/0	0/0	DK
Q307	0/0.7	0/0	0/0	MUTE
Q308	0/0.7	0/0	0/0	MUTE
Q309	0/4.4	8.4/0	0/0	
Q310	0/0.7	0/0	0/0	MUTE
Q311	0/0.7	0/0	0/0	MUTE
Q312	0/0.7	0/0	0/0	MUTE
Q313	0/0.7	0/0	0/0	
Q601	0.6/7.2	5.9/0	0/0	ALARM
Q602	0.6	4.5	0	
Q604	0/5.9	5.9/0	0/0	RADIO/TAPE
Q605	4.4/0	0/5.9	0/0	RADIO/TAPE
Q607	0/6.1	6/0	0/0	DK
Q611	0/5.2	9.8/0	0/0	MS
Q612-1	0/0	6.1/P.S	0/0	MS
Q612-2	4.5/P.S	0/0	0/0	MS
Q614-1	0/10	13.2/0	0/0	PAUSE
Q614-2	4.5/0	0/10	0/0	PAUSE
Q616-1	2.8/0	0/5.4	0/0	FF/REW
Q616-2	0/2.9	5.4/0	0/0	FF/REW
Q618	0/4.5	13.9/1.5	0/1.4	MONO/ST
Q620	0	13.7	0	
Q621	11.7/2.6	0/P.S	P.S/P.S	ST
Q622-1	8.2/0	0/1	0/0	FM/AM
Q622-2	4.5/0	0/1.2	0/0	LW/FW.MW
Q623	1.2	9.8	0.6	
Q624	0.6	3.3	0	
Q627	0	9.8	0	
Q628	0.6	3.6	0	
Q629	4.5	0	0	
Q630	0	13.7	0	
Q633	6/0	0/5.8	0/0	DK
Q634	13.7	0	13.7	
Q637	8.6/0	0/8.6	8.6/0	SDK
Q638	0/4.4	8.6/0	0/0	SDK
Q640	13.5	1	13.7	
Q641	0	13.4	0	
Q644	0/4.7	3.4/0	0/0	DK
Q801	9.6	14.2	8.9	
Q802	9.2	14	8.5	
Q804	9.3	14.1	8.7	
Q807	0/4	9.3/0	0/0	FM/AM
Q810	5.9	13.7	5.2	
Q812	10.2	14.1	9.6	
Q813	8.7/0	0/9.6	0/0	FM/AM
Q814	7	14.1	6.9	

IC310

1	7.1
2	7
3	7
4	0
5	7
6	7
7	7
8	14.1

IC302, 303

1	0
2	6.7
3	6.9
4	6.9
5	13.8
6	6.9
7	6.9
8	6.7

IC601

	ON	OFF	
1	8	0	SK
2	0.2	6.7	DK
3	0	3.2	SK
4	0	7.1	SK
5	4.3	4.3	
6	4.3	4.3	
7	8.6	8.6	
8	4.3	4.3	
9	5.4	5.4	
10	4.3	4.3	
11	5.4	5.4	
12	4.4	4.4	
13	4.3	4.3	
14	4.3	4.3	
15	4.3	4.3	
16	0	7.3	
17	3.6	3.6	
18	0	0	

IC602
SDK SW (ALARM)

	ON	OFF
1	7.4	P.S
2	1.6	P.S
3	5.3	P.S
4	8.6	8.6
5	5.3	3
6	0.6	7.4
7	7.4	0.6
8	0.6	7.4
9	5.2	3.1
10	0	8.5
11	0	0
12	2.8	P.S
13	6.9	P.S
14	0.6	P.S

IC603

	TAPE	RADIO
1	0	0
2	0	0
3	0	0
4	0	0
5	0	5.9
6	0	5.9
7	0	0
8	0	0
9	0	0
10	0	0
11	0	0
12	5.9	0
13	5.9	0
14	5.9	5.9

IC101

	METAL ON		OFF
	FOR	REV	
1	12.7	12.7	-
2	2.99	2.99	-
3	12.68	0	-
4	2.98	2.98	-
5	2.85	2.85	-
6	2.85	2.85	-
7	2.85	2.85	-
8	0	0	-
9	2.85	2.85	-
10	0	0	-
11	2.85	2.85	-
12	2.85	2.85	-
13	2.85	2.85	-
14	2.97	2.97	-
15	0.15	0.15	12.95
16	2.98	2.98	-

IC604

	ON	OFF
1	P.S	0
2	P.S	P.S
3	P.S	P.S
4	P.S	0
5	5.39	0
6	5.16	0
7	0	0
8	P.S	0
9	P.S	P.S
10	P.S	0
11	P.S	P.S
12	5.39	0
13	5.19	0
14	5.36	5.36

IC605

	ON	OFF
1	P.S	P.S
2	P.S	0
3	P.S	P.S
4	P.S	0
5	5.1	0
6	5.17	3.22
7	0	0
8	P.S	0
9	P.S	P.S
10	P.S	0
11	P.S	P.S
12	5.22	0
13	5.13	0
14	5.36	5.36

IC202

1	9.51	
2	4.69	
3	1.27	
4	4.76	
5	9.54	
6	4.75	
7	4.72	
8	4.76	
9	4.73	
10	4.37	
11	4.75	
12	4.76	
13	0.27	
14	0.27	
15	4.77	
16	0.29	
17	0.3	
18	4.77	
19	4.76	
20	4.75	
21	4.75	
22	4.76	
23	4.76	
24	4.76	
25	4.77	
26	0.3	
27	0.31	
28	4.78	
29	0.28	
30	0.28	
31	4.76	
32	4.76	
33	4.38	
34	4.77	
35	4.78	
36	4.78	
37	4.78	
38	0/4.99/9.56	OFF/B/C
39	4.72	
40	4.78	
41	4.78	
42	0	

IC606

1	0	
2	0/1.0	FM-MW/LW
3	1.2/0	FM-MW/LW
4	0	
5	0/1.8	FM-MW/LW
6	1.2/0	FM-MW/LW
7	5.2	
8	0	
9	4.5/0	MW/FM-LW
10	4.5/0	LW/FM-MW
11	4.5/0	SDK ON-OFF
12	4.5	
13	0/4.5	LOUD ON/OFF
14	4.5/0	RADIO/TAPE
15	4.5/0	MUTE ON/OFF
16	4.5	
17	0	
18	4.5/P.S	MS OFF/ON
19	4.5/0	PAUSE OFF/ON
20	4.5/0	ST/MONO
21	3.6/0	LOCAL/DX
22	4.5/0	OFF/ON
23	4.5/0	
24	2.2	
25	2.1	
26	4.6	
27 ↓ 57	P.S	
58	4.6	
59 ↓ 62	P.S	
63	0/4.5	SD OFF/ON
64	5.1/0	SK OFF/ON

IC801

1	0
2	6.9
3	6.9
4	6.9
5	14.1
6	13.6
7	1.2
8	1.3

7385L CODE02 Model Only

(ON/OFF)

	B	C	E	
Q001	3.5/0	P.S/P.S	0/0	LOCAL/DX
Q002	0.7/0	7.9/0	0/0	
Q003	1.8/0	5.7/0	1.1/0	
Q101	0/14	7.6/0	0/0	FOR/REW
Q202	0/4.6	3.3/0	0/0	C
Q203	4.6/0	5 /9.6	3.3/0	B
Q301-1	2.4/0	0/0	0/0	LOUD
Q301-2	2.4/0	0/0	0/0	LOUD
Q307	0/0.7	0/0	0/0	MUTE
Q308	0/0.7	0/0	0/0	MUTE
Q309	0/4.4	8.4/0	0/0	
Q310	0/0.7	0/0	0/0	MUTE
Q311	0/0.7	0/0	0/0	MUTE
Q312	0/0.7	0/0	0/0	MUTE
Q313	0/0.7	0/0	0/0	
Q501	0/5.9	5.9/0	0/0	
Q502	4.4/0	0/5.9	0/0	
Q611	0/5.2	9.8/0	0/0	MS
Q612-1	0/0	9.8/0	0/0	MS ON/OFF
Q612-2	P.S/4.5	0/0	0/0	MS ON/OFF
Q614-1	0/10	13.2/0	0/0	PLAY/PAUSE
Q614-2	4.5/0	0/10	0/0	PLAY/PAUSE
Q616-1	2.9/0	0/5.4	0/0	FF/REW
Q616-2	0/2.9	5.4/0	0/0	FF/REW
Q618	0/4.5	13.9/1.5	0/1.4	MONO/ST
Q620	0	13.7	0	
Q621	11.7/2.6	0/P.S	P.S/P.S	ST
Q622-1	8.2/0	0/1.0	0/0	FM/AM
Q622-2	4.5/0	0/1.2	0/0	LW/FW.MW
Q623	1.2/0	9.8/9.8	0.6/0	
Q624	0.6	3.3	0	
Q627	0/1.0	9.9/9.8	0/0.6	
Q628	0/0.6	9.9/3.9	0/0	
Q629	4.5	0	0	
Q630	0	13.7	0	
Q634	13.7	0	13.7	
Q801	9.6	14.2	8.9	
Q802	9.2	14	8.5	
Q804	9.3	14.1	8.7	
Q807	0/4	9.3/0	0/0	FM/AM
Q810	5.9	13.7	5.2	
Q812	10.2	14.1	9.6	
Q813	8.7	0	0	FM/AM
Q814	7	14.1	6.9	

IC310

1	7.1
2	7
3	7
4	0
5	7
6	7
7	7
8	14.1

IC302, 303

1	0
2	6.7
3	6.9
4	6.9
5	13.8
6	6.9
7	6.9
8	6.7

IC603

	TAPE	RADIO
1	0	0
2	0	0
3	0	0
4	0	0
5	0	5.9
6	0	5.9
7	0	0
8	0	0
9	0	0
10	0	0
11	0	0
12	5.9	0
13	5.9	0
14	5.9	5.9

IC604

	ON	OFF
1	P.S	0
2	P.S	P.S
3	P.S	P.S
4	P.S	0
5	5.4	0
6	5.2	0
7	0	0
8	P.S	0
9	P.S	P.S
10	P.S	0
11	P.S	P.S
12	5.4	0
13	5.2	0
14	5.4	5.4

IC101

	METAL ON		OFF
	FOR	REV	
1	12.7	12.7	-
2	3	3	-
3	12.7	0	-
4	3	3	-
5	2.9	2.9	-
6	2.9	2.9	-
7	2.9	2.9	-
8	0	0	-
9	2.9	2.9	-
10	0	0	-
11	2.9	2.9	-
12	2.9	2.9	-
13	3	3	13
14	3	3	-
15	0.2	0.2	-
16	3	3	-

IC606

	ON	OFF	
1	0		
2	0	1	FM-MW/LW
3	1.2	0	FM-MW/LW
4	0		
5	0	1.8	FM-MW/LW
6	1.2	0	FM-MW/LW
7	5.2		
8	0		
9	4.5	0	MW/FM.LW
10	4.5	0	LW/FM.MW
11	4.5	0	SDK ON-OFF
12	4.5		
13	0	4.5	LOUD ON/OFF
14	4.5	0	RADIO/TAPE
15	4.5	0	MUTE ON/OFF
16	4.5		
17	0		
18	4.5	P.S	MS OFF/ON
19	4.5	0	PAUSE OFF/ON
20	4.5	0	ST/MONO
21	3.6	0	LOCAL/DX
22	4.5	0	OFF/ON
23	4.5	0	
24	2.2		
25	2.1		
26	4.6		
27 ↓ 57	P.S		
58	4.6		
59 ↓ 62	P.S		

IC605

	ON	OFF
1	P.S	P.S
2	P.S	0
3	-	-
4	-	-
5	-	-
6	5.2	3.2
7	0	0
8	P.S	0
9	P.S	P.S
10	P.S	0
11	P.S	P.S
12	5.2	0
13	5.1	0
14	5.4	5.4

IC801

1	0
2	6.9
3	6.9
4	6.9
5	14.1
6	13.6
7	1.2
8	1.3

IC202

1	9.5	
2	4.7	
3	1.3	
4	4.8	
5	9.5	
6	4.8	
7	4.7	
8	4.8	
9	4.7	
10	4.3	
11	4.8	
12	4.8	
13	0.3	
14	0.3	
15	4.8	
16	0.3	
17	0.3	
18	4.8	
19	4.8	
20	4.8	
21	4.8	
22	4.8	
23	4.8	
24	4.8	
25	4.8	
26	0.3	
27	0.3	
28	4.8	
29	0.3	
30	0.3	
31	4.8	
32	4.8	
33	4.4	
34	4.8	
35	4.8	
36	4.8	
37	4.8	
38	0/5/9.6	OFF/B/C
39	4.8	
40	4.8	
41	4.8	
42	0	

Schematic Diagram 〈7385M/L CODE02〉(1/2)

IC'S	IC605	IC604	IC801
TRANSISTORS (Q)	Q610 Q001 Q002 Q612 Q609 Q616 Q614 Q611 Q003 Q618 Q636 Q637 Q635 Q638 Q644 Q633 Q802 Q641 Q690 Q801 Q813 Q620 Q804 Q630 Q807 Q621 Q629 Q812 Q634 Q628 Q309 Q627 Q624 Q301 Q303 Q623 Q810 Q304 Q622 Q814 Q307 Q308 Q306 Q311 Q310		

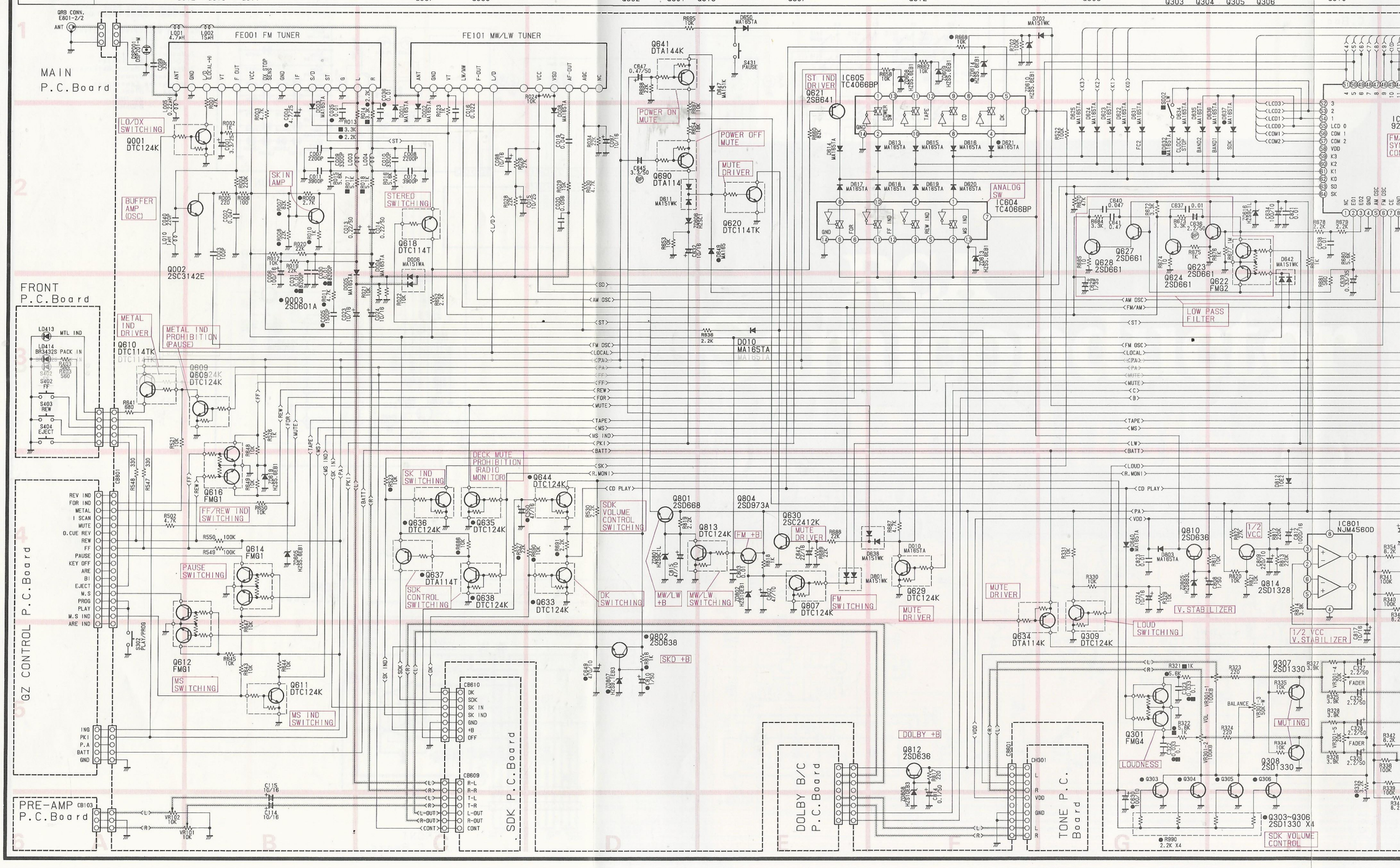

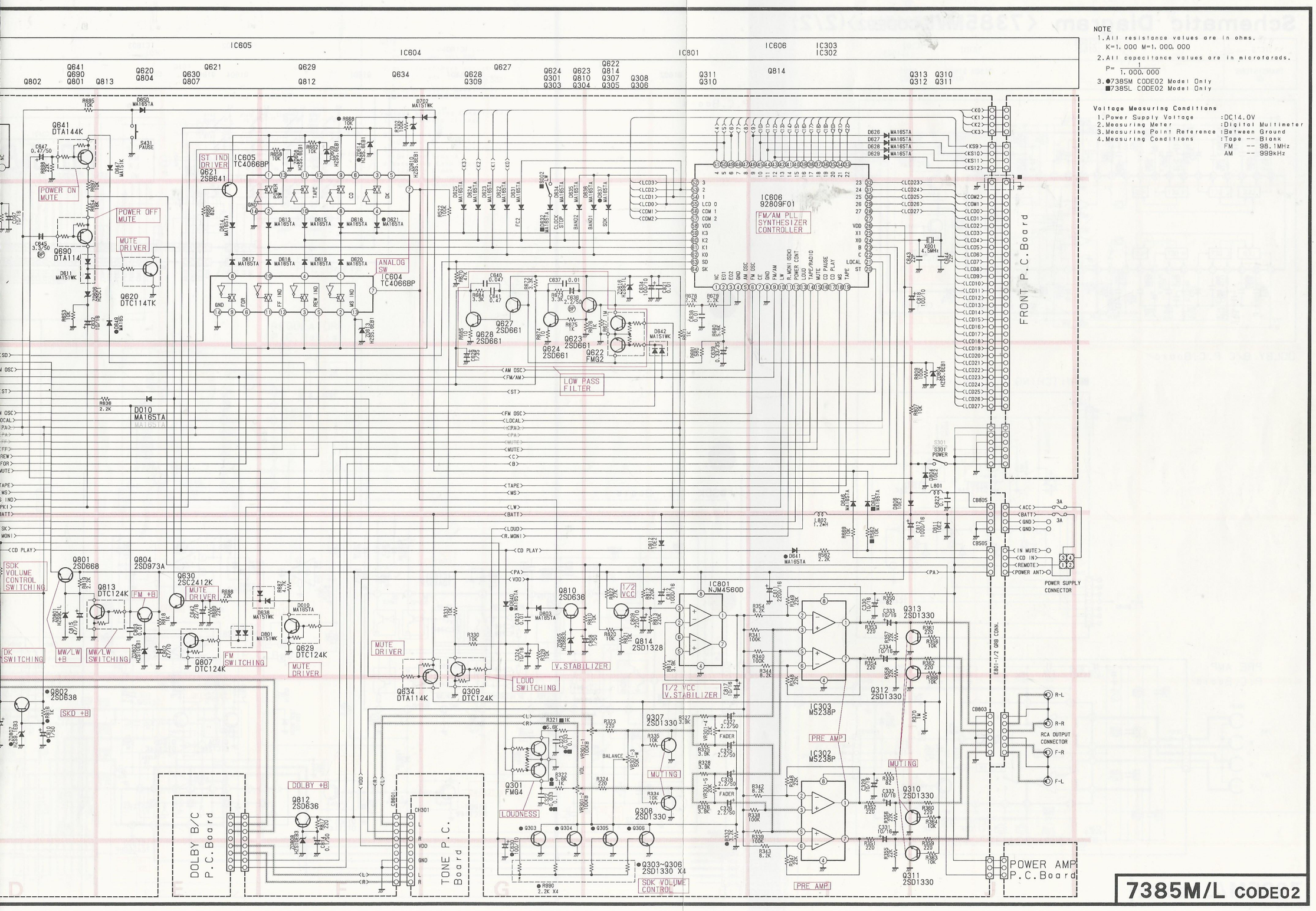

NOTE

1. All resistance values are in ohms.
   K=1,000 M=1,000,000
2. All capacitance values are in microfarads.
   $P=\frac{1}{1,000,000}$
3. ●7385M CODE02 Model Only
   ■7385L CODE02 Model Only

Voltage Measuring Conditions

1. Power Supply Voltage : DC14.0V
2. Measuring Meter : Digital Multimeter
3. Measuring Point Reference : Between Ground
4. Measuring Conditions : Tape -- Blank
   FM -- 98.1MHz
   AM -- 999kHz

Ordering No. 2-6300-189-101
Printed in Germany
11685.(0120)

7385M/L CODE02

Schematic Diagram <7385M/L CODE02>(2/2)

IC'S	IC1502 IC1501 IC101 IC202 IC1503 IC1601 IC1602 IC1603
TRANSISTORS (Q)	Q1501 Q1502 Q101 Q203 Q202 Q1602 Q1607 Q1601 Q1604 Q1605

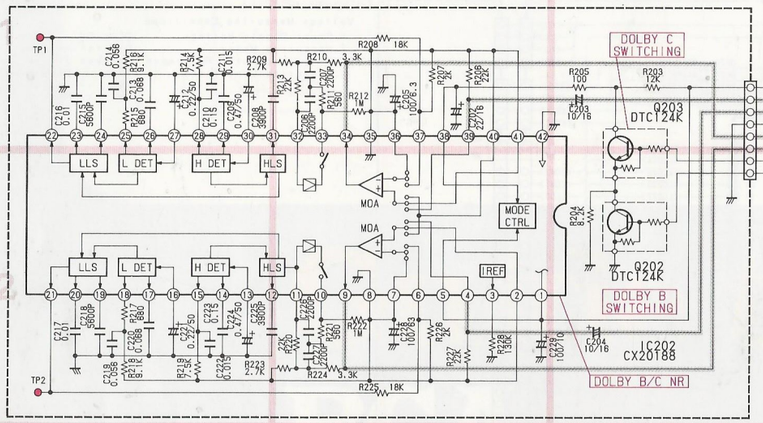

DOLBY B/C P.C.Board

■SWITCHING P.C.Board

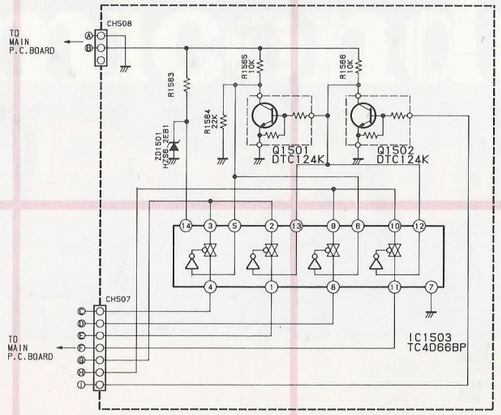

PRE AMP P.C.Board

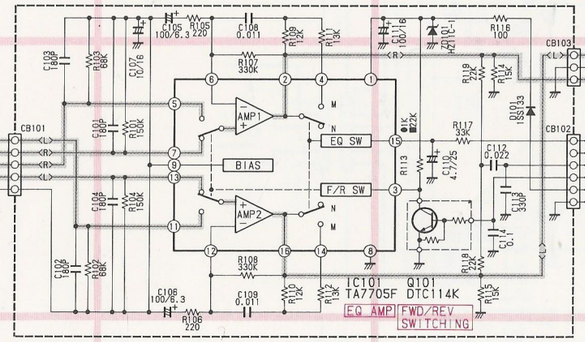

MAIN P.C.Board

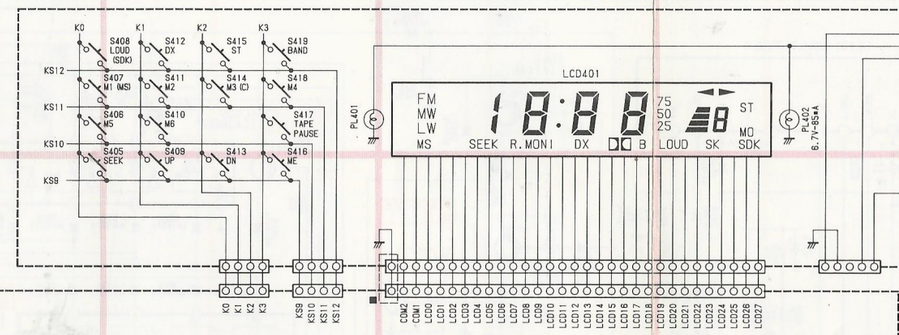

●SDK P.C. Board

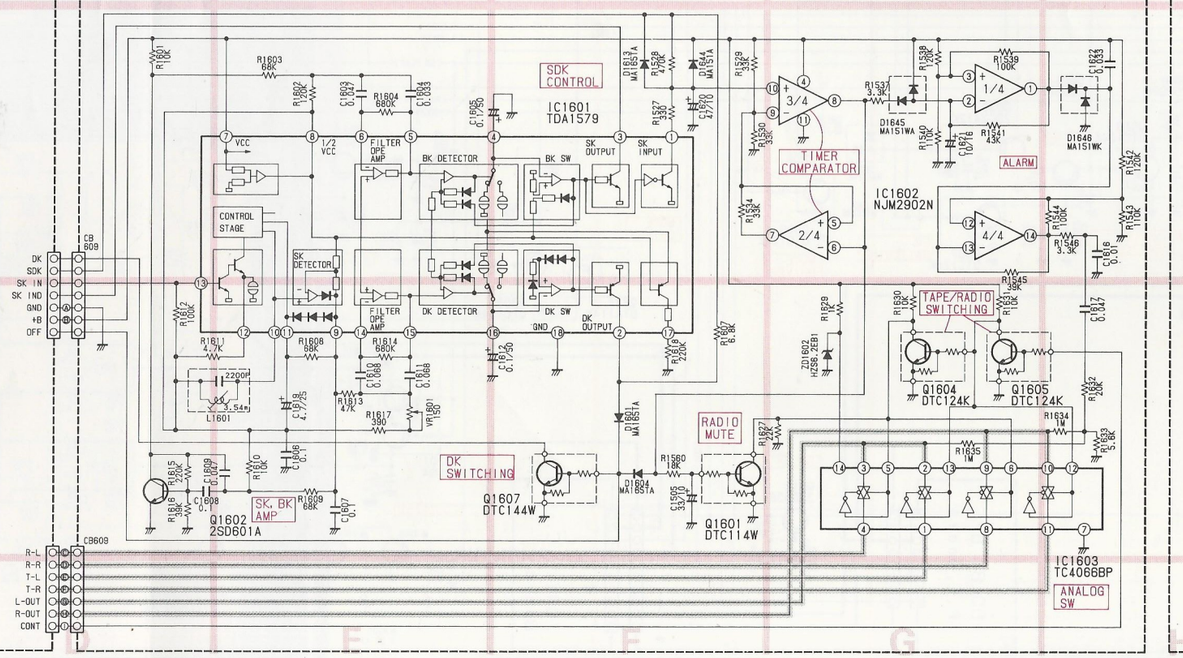

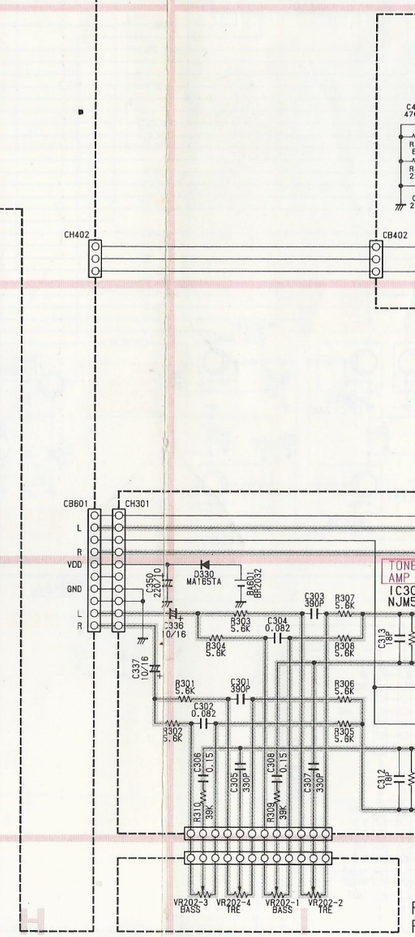

7385M/L CODE02

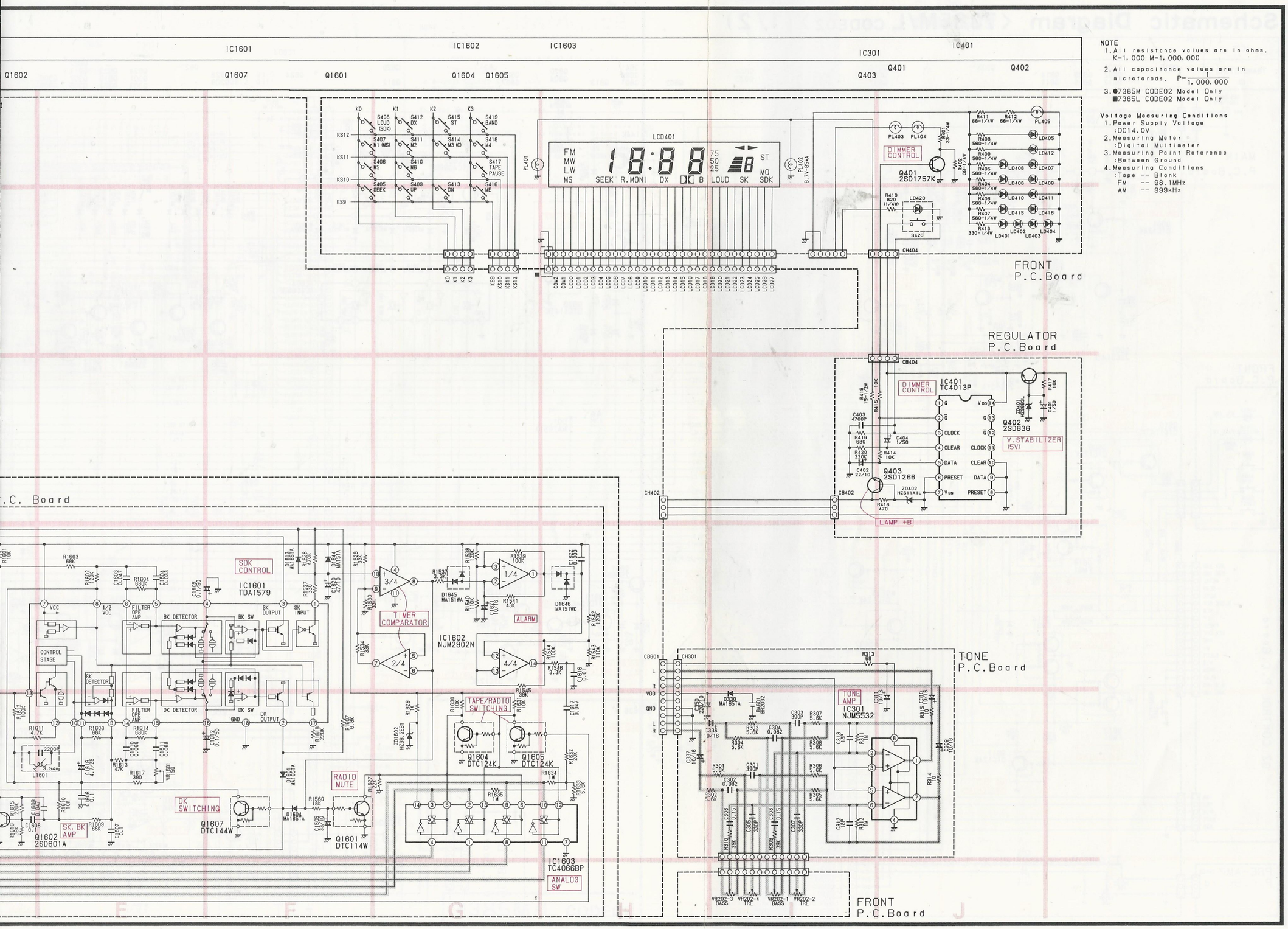

NOTE

1. All resistance values are in ohms. K=1,000 M=1,000,000
2. All capacitance values are in microfarads. $P=\frac{1}{1,000,000}$
3. ●7385M CODE02 Model Only
   ■7385L CODE02 Model Only

Voltage Measuring Conditions

1. Power Supply Voltage
   :DC14.0V
2. Measuring Meter
   :Digital Multimeter
3. Measuring Point Reference
   :Between Ground
4. Measuring Conditions
   :Tape -- Blank
   FM -- 98.1MHz
   AM -- 999kHz

dering No. 2-6300-189
Printed in Germ
11685.(0

Schematic Diagram 〈7385E CODE02〉

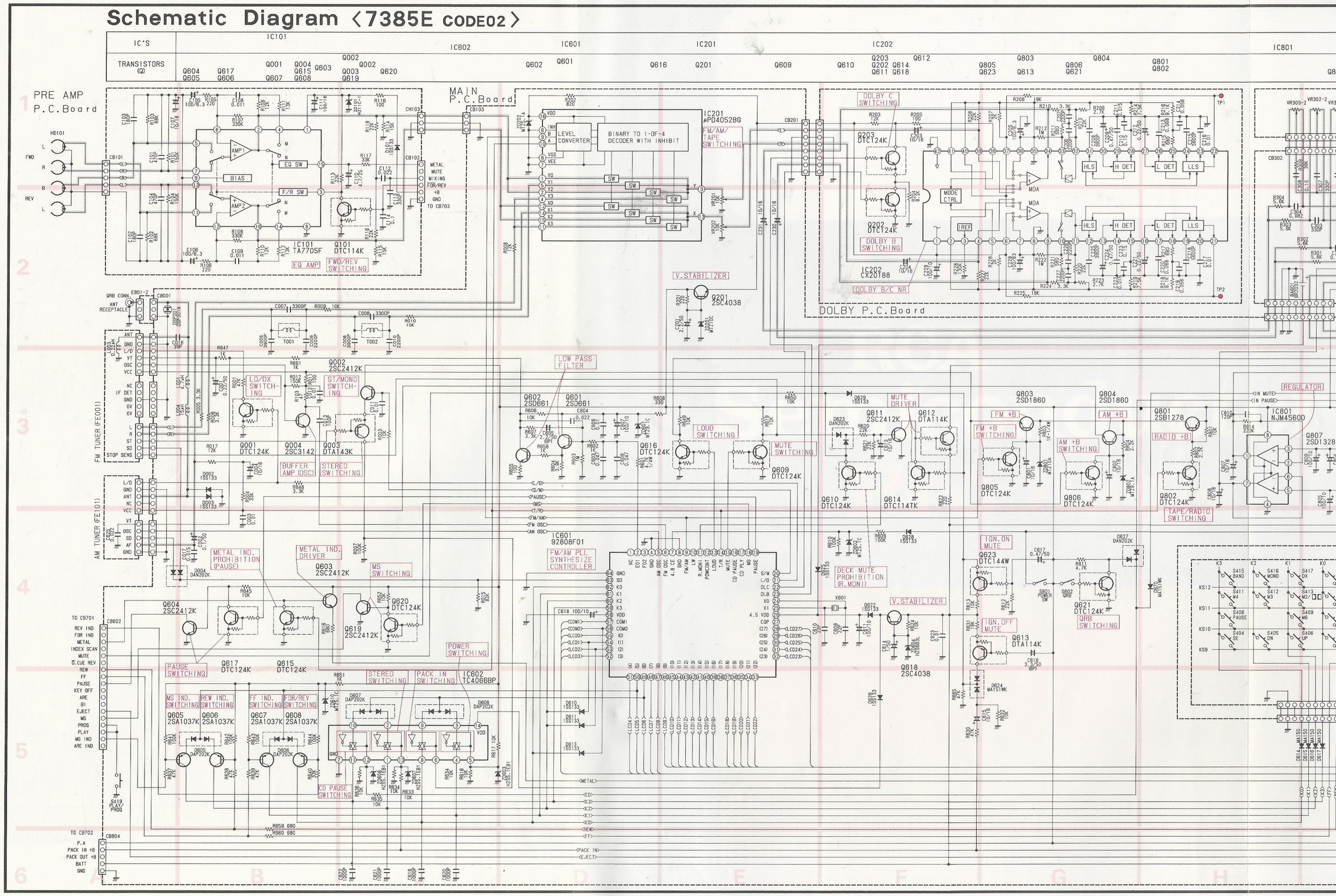

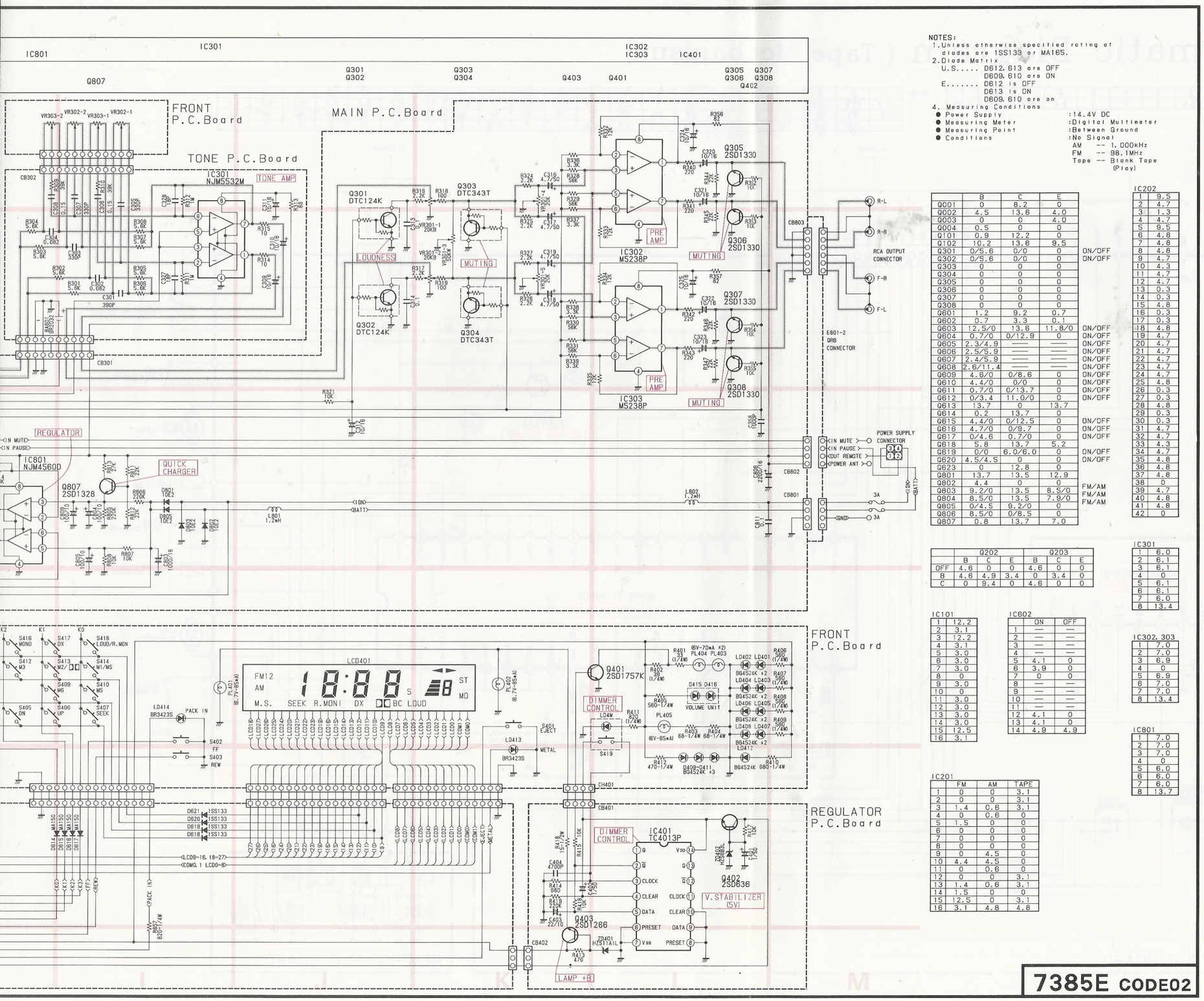

NOTES:

1. Unless otherwise specified rating of diodes are 1SS133 or MA165.
2. Diode Matrix
   U.S..... D612, 613 are OFF
   D609, 610 are ON
   E..... D612 is OFF
   D613 is ON
   D609, 610 are on
4. Measuring Conditions
   - Power Supply :14.4V DC
   - Measuring Meter :Digital Multimeter
   - Measuring Point :Between Ground
   - Conditions :No Signal
     AM -- 1.000kHz
     FM -- 98.1MHz
     Tape -- Blank Tape (Play)

	B	C	E	
Q001	0	8.2	0	
Q002	4.5	13.6	4.0	
Q003	0	0	4.0	
Q004	0.5	0	0	
Q101	0.9	12.2	0	
Q102	10.2	13.6	9.5	
Q301	0/5.6	0/0	0	ON/OFF
Q302	0/5.6	0/0	0	ON/OFF
Q303	0	0	0	
Q304	0	0	0	
Q305	0	0	0	
Q306	0	0	0	
Q307	0	0	0	
Q308	0	0	0	
Q601	1.2	9.2	0.7	
Q602	0.7	3.3	0.1	
Q603	12.5/0	13.6	11.8/0	ON/OFF
Q604	0.7/0	0/12.9	0	ON/OFF
Q605	2.3/4.9	—	—	ON/OFF
Q606	2.5/5.9	—	—	ON/OFF
Q607	2.4/5.9	—	—	ON/OFF
Q608	2.6/11.4	—	—	ON/OFF
Q609	4.6/0	0/8.6	0	ON/OFF
Q610	4.4/0	0/0	0	ON/OFF
Q611	0.7/0	0/13.7	0	ON/OFF
Q612	0/3.4	11.0/0	0	ON/OFF
Q613	13.7	0	13.7	
Q614	0.2	13.7	0	
Q615	4.4/0	0/12.5	0	ON/OFF
Q616	4.7/0	0/9.7	0	ON/OFF
Q617	0/4.6	0.7/0	0	ON/OFF
Q618	5.8	13.7	5.2	
Q619	0/0	6.0/6.0	0	ON/OFF
Q620	4.5/4.5	0	0	ON/OFF
Q623	0	12.8	0	
Q801	13.7	13.5	12.9	
Q802	4.4	0	0	
Q803	9.2/0	13.5	8.5/0	FM/AM
Q804	8.5/0	13.5	7.9/0	FM/AM
Q805	0/4.5	9.2/0	0	FM/AM
Q806	8.5/0	0/8.5	0	
Q807	0.8	13.7	7.0	

IC202

1	9.5
2	4.7
3	1.3
4	4.7
5	9.5
6	4.8
7	4.8
8	4.8
9	4.7
10	4.3
11	4.7
12	4.7
13	0.3
14	0.3
15	4.8
16	0.3
17	0.3
18	4.8
19	4.7
20	4.7
21	4.7
22	4.7
23	4.7
24	4.7
25	4.8
26	0.3
27	0.3
28	4.8
29	0.3
30	0.3
31	4.7
32	4.7
33	4.3
34	4.7
35	4.8
36	4.8
37	4.8
38	0
39	4.7
40	4.8
41	4.8
42	0

	Q202			Q203		
	B	C	E	B	C	E
OFF	4.6	0	0	4.6	0	0
B	4.6	4.9	3.4	0	3.4	0
C	0	9.4	0	4.6	0	0

IC301

1	6.0
2	6.1
3	6.1
4	0
5	6.1
6	6.1
7	6.0
8	13.4

IC101

1	12.2
2	3.1
3	12.2
4	3.1
5	3.0
6	3.0
7	3.0
8	0
9	3.0
10	0
11	3.0
12	3.0
13	3.0
14	3.0
15	12.5
16	3.1

IC602

	ON	OFF
1	—	—
2	—	—
3	—	—
4	—	—
5	4.1	0
6	3.9	0
7	0	0
8	—	—
9	—	—
10	—	—
11	—	—
12	4.1	0
13	4.1	0
14	4.9	4.9

IC302, 303

1	7.0
2	7.0
3	6.9
4	0
5	6.9
6	7.0
7	7.0
8	13.4

IC801

1	7.0
2	7.0
3	7.0
4	0
5	6.0
6	6.0
7	6.0
8	13.7

IC201

	FM	AM	TAPE
1	0	0	3.1
2	0	0	3.1
3	1.4	0.6	3.1
4	0	0.6	0
5	1.5	0	0
6	0	0	0
7	0	0	0
8	0	0	0
9	0	4.5	0
10	4.4	4.5	0
11	0	0.6	0
12	0	0	3.1
13	1.4	0.6	3.1
14	1.5	0	0
15	12.5	0	3.1
16	3.1	4.8	4.8

7385E CODE02

Order No. 2-6300-189-101
Printed in Germany
11685.(0120)

Schematic Diagram (Tape Mechanism)

IC702	1	2	3	4	5	6	7	8	9
	1.57	12.4	2	0	0	6.2	6.2	12.4	0.68

IC701	1	2	3	4	5	6	7	8	9	10	11	12	13	14	15	16	17	18	19	20	21
	13.9	13.9	13.9	0	0	0	0	0	13.9	12.3	12.3	0.1	0	6.2	6.2	6.2	6.2	6.2	6.2	6.2	6.2
	22	23	24	25	26	27	28	29	30	31	32	33	34	35	36	37	38	39	40	41	42
	0	6.2	5.6	13.6	0	0/13.9 FOR/REV	13.1	P. S	12.5	12.5	0	0	0.16	0	0	0	0	0	13.9	0	0

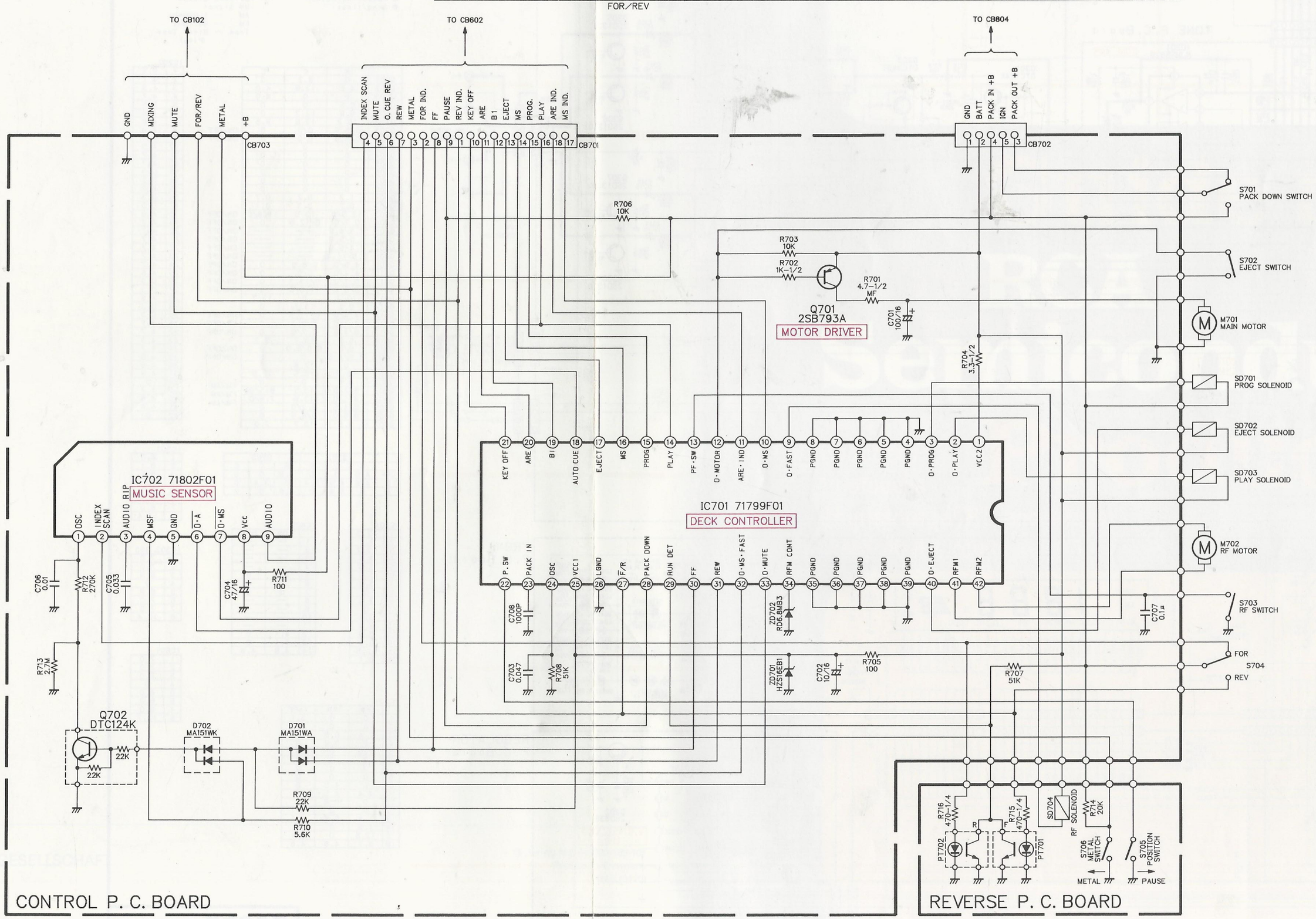

Wiring Diagram and Parts Layout on P.C. Board (7385M/LCODE02)

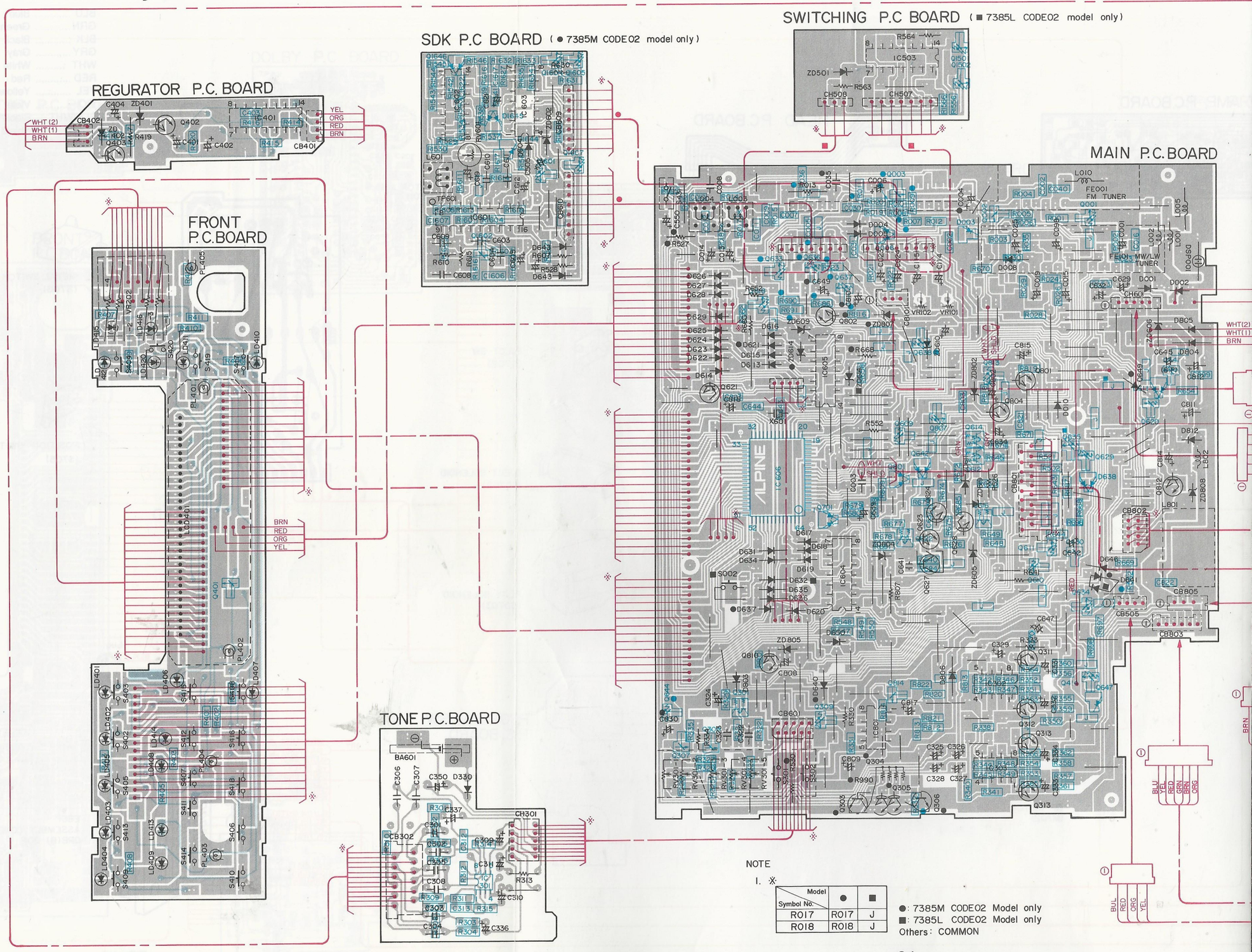

NOTE

I. ※

Symbol No. \ Model	●	■
R017	R017	J
R018	R018	J

●: 7385M CODE02 Model only
■: 7385L CODE02 Model only
Others: COMMON

7385M/L/E
CODE 02

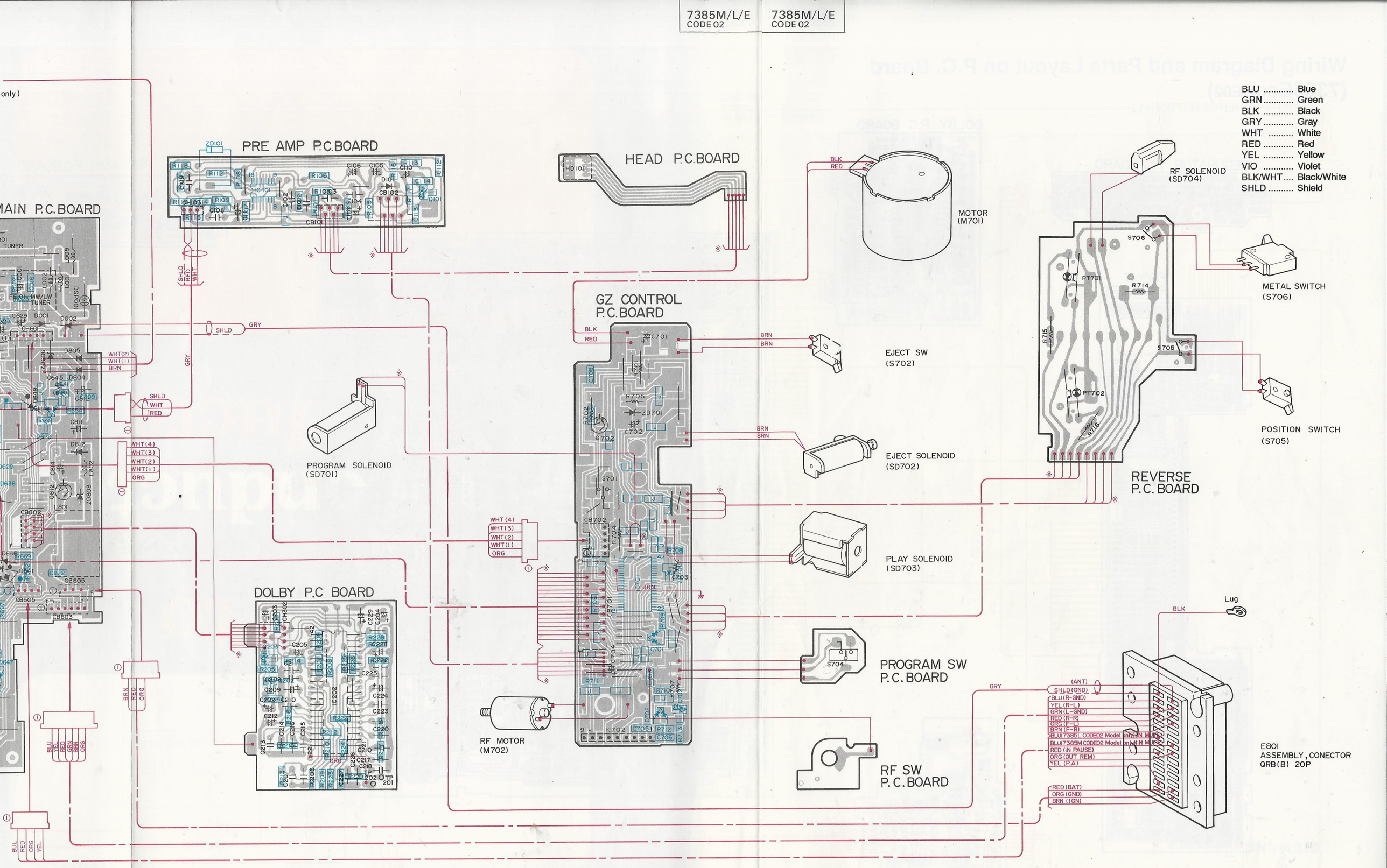

7385M/L/E
CODE 02

Wiring Diagram and Parts Layout on P.C. Board (7385ECODE02)

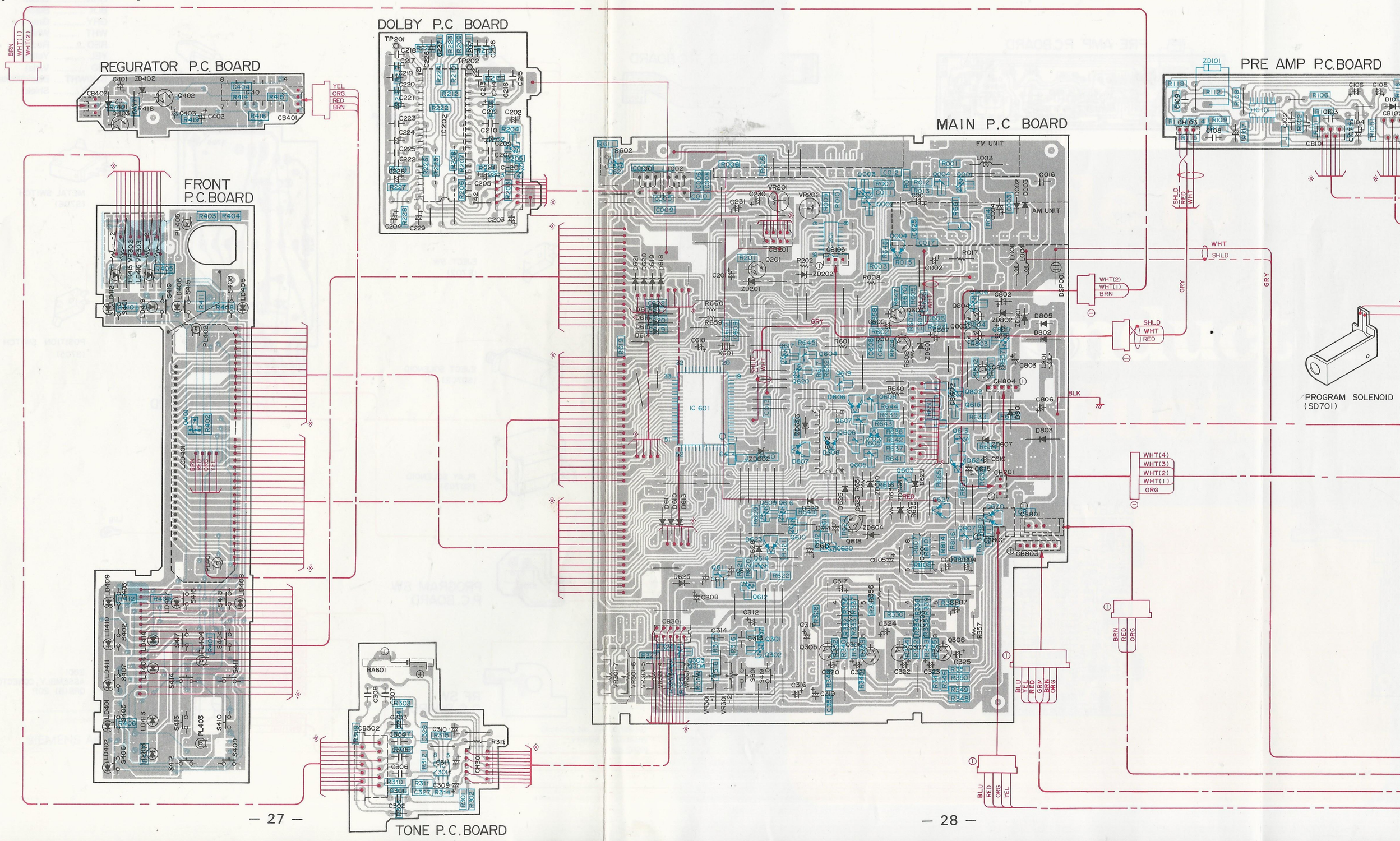

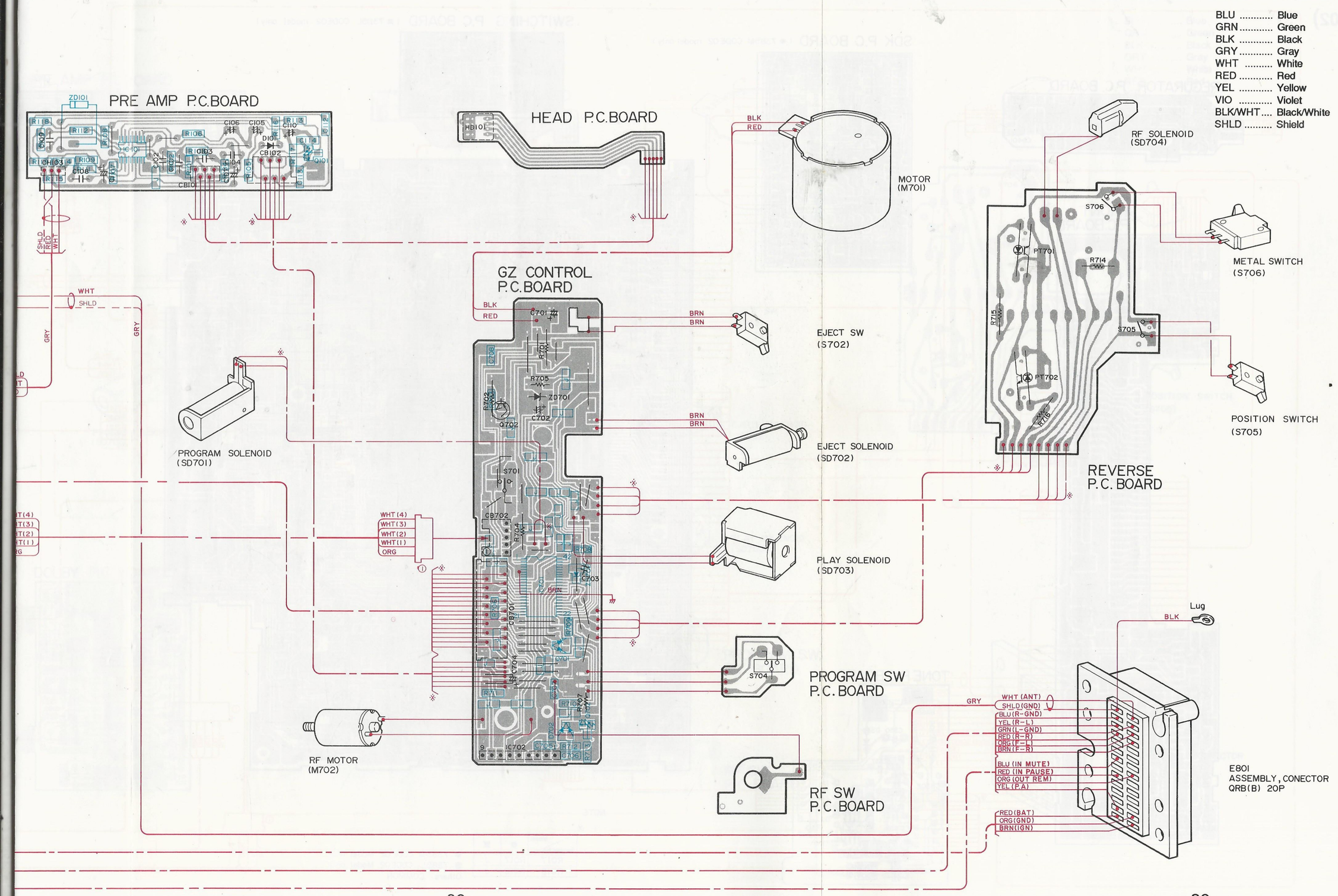
BLU ..... Blue
GRN ..... Green
BLK ..... Black
GRY ..... Gray
WHT ..... White
RED ..... Red
YEL ..... Yellow
VIO ..... Violet
BLK/WHT .... Black/White
SHLD ..... Shield
PRE AMP P.C.BOARD
HEAD P.C.BOARD
MOTOR (M701)
RF SOLENOID (SD704)
METAL SWITCH (S706)
GZ CONTROL P.C.BOARD
EJECT SW (S702)
EJECT SOLENOID (SD702)
POSITION SWITCH (S705)
REVERSE P.C. BOARD
PROGRAM SOLENOID (SD701)
PLAY SOLENOID (SD703)
PROGRAM SW P.C. BOARD
RF MOTOR (M702)
RF SW P.C.BOARD
Lug
E801 ASSEMBLY, CONECTOR QRB(B) 20P
WHT (ANT)
SHLD (GND)
BLU (R-GND)
YEL (R-L)
GRN (L-GND)
RED (R-R)
ORG (F-L)
BRN (F-R)
BLU (IN MUTE)
RED (IN PAUSE)
ORG (OUT REM)
YEL (P.A)
RED (BAT)
ORG (GND)
BRN (IGN)

Electrical Parts List (7385M/LCODE02)

Resistors:Carbon resistors under 1/4 watts are not mentioned in the parts list, please confirm them by schematic diagram.

Abbreviations

CP.=Chip	TAN.=Tantalum
CF.=Carbon Film	PP.=Polypropylene
ELY.=Electrolytic	CONN.=Connector
CER.=Ceramic	μF.=Microfarads
MYL.=Mylar	P.=Picofarads

	Symbol No.	Part No.	Description		
			Main P.C. Board		
	IC's				
	IC302	51T80136F01	M5238P		
	IC303	51T80136F01	M5238P		
	IC604	51T47739F01	TC4066BP		
	IC605	51T47739F01	TC4066BP		
	IC606	51T92809F01	92809F01		
	IC801	51T73718F02	NJM4560D		
	Transistors				
	Q001	48T62967F03	CP., DTC124K		
	or	48T64222F02	CP., UN2212		
	Q002	48T82429F01	CP., 2SC3142		
●	Q003	48T52438F02	CP., 2SD601A		
	Q301	48T73888F10	CP., FMG4		
●	Q303	48T57337F01	2SD1330		
●	Q304	48T57337F01	2SD1330		
●	Q305	48T57337F01	2SD1330		
●	Q306	48T57337F01	2SD1330		
	Q307	48T63788F01	CP., 2SD1328		
	Q308	48T63788F01	CP., 2SD1328		
	Q309	48T62967F03	CP., DTC124K		
	or	48T64222F02	CP., UN2212		
	Q310	48T57337F03	2SD1330		
	Q311	48T57337F03	2SD1330		
	Q312	48T57337F03	2SD1330		
	Q313	48T57337F03	2SD1330		
	Q609	48T62967F03	CP., DTC124K		
	or	48T64222F02	CP., UN2212		
	Q610	48T62967F09	CP., DTC114TK		
	or	48T64222F05	CP., UN2215		
	Q611	48T62967F03	CP., DTC124K		
	or	48T64222F02	CP., UN2212		
	Q612	48T73888F08	CP., FMG1		
	Q614	48T73888F08	CP., FMG1		
	Q616	48T73888F08	CP., FMG1		
	Q618	48T62967F09	CP., DTC114TK		
	or	48T64222F05	CP., UN2215		
	Q620	48T62967F09	CP., DTC114TK		
	or	48T64222F05	CP., UN2215		

	Symbol No.	Part No.	Description		
	Q621	48S40591U01	CP., 2SB641		
	Q622	48T73888F09	CP., FMG2		
	Q623	48T42182U01	2SD661		
	Q624	48T42182U01	2SD661		
	Q627	48T42182U01	2SD661		
	Q628	48T42182U01	2SD661		
	Q629	48T62967F03	CP., DTC124K		
	or	48T64222F02	CP., UN2212		
	Q630	48T63417F01	CP., 2SC2412K		
●	Q633	48T62967F03	CP., DTC124K		
●	or	48T64222F02	CP., UN2212		
	Q634	48T62966F02	CP., DTA114		
■	Q635	48T62967F03	CP., DTC124K		
■	or	48T64222F02	CP., UN2212		
●	Q636	48T62967F03	CP., DTC124K		
●	or	48T64222F02	CP., UN2212		
●	Q637	48T62966F09	CP., DTA114T		
●	or	48T64221F05	CP., UN2115		
●	Q638	48T62967F03	CP., DTC124K		
●	or	48T64222F02	CP., UN2212		
	Q640	48T62966F02	CP., DTA114		
	Q641	48T62967F08	CP., DTC114W		
●	Q644	48T62967F03	CP., DTC124K		
●	or	48T64222F02	CP., UN2212		
	Q801	48S42455F03	2SD638		
●	Q802	48S42455F03	2SD638		
	Q804	48T52549F01	2SD973A		
	Q807	48T62967F03	CP., DTC124K		
	or	48T64222F02	CP., UN2212		
	Q810	48S40627U07	2SD636		
	Q812	48S40627U07	2SD636		
	Q813	48T62967F03	CP., DTC124K		
	or	48T64222F02	CP., UN2212		
	Q814	48T63788F01	CP., 2SD1328		
	Diodes				
	D001	48T44813F01	MA165TA		
	or	48T58583F01	1SS176		
	or	48T68828F01	1SS133		
	D002	48T44813F01	MA165TA		
	or	48T58583F01	1SS176		
	or	48T68828F01	1SS133		
	D003	48T52446F01	CP., MA151WA		
	D004	48T44813F01	MA165TA		
	or	48T58583F01	1SS176		
	or	48T68828F01	1SS133		

Note : ● ; 7385M CODE02 Model only ■ ; 7385L CODE02 Model only Others ; Common

	Symbol No.	Part No.	Description		
	D005	48T44813F01	MA165TA		
	or	48T58583F01	1SS176		
	or	48T68828F01	1SS133		
	D006	48T52445F01	CP., MA151WA		
	D008	48T51582F01	MA150		
	D010	48T44813F01	MA165TA		
	or	48T58583F01	1SS176		
	or	48T68828F01	1SS133		
	D611	48T52446F01	CP., MA151WK		
	D613	48T44813F01	MA165TA		
	or	48T58583F01	1SS176		
	or	48T68828F01	1SS133		
	D614	48T44813F01	MA165TA		
	or	48T58583F01	1SS176		
	or	48T68828F01	1SS133		
	D615	48T44813F01	MA165TA		
	or	48T58583F01	1SS176		
	or	48T68828F01	1SS133		
	D616	48T44813F01	MA165TA		
	or	48T58583F01	1SS176		
	or	48T68828F01	1SS133		
	D617	48T44813F01	MA165TA		
	or	48T58583F01	1SS176		
	or	48T68828F01	1SS133		
	D618	48T44813F01	MA165TA		
	or	48T58583F01	1SS176		
	or	48T68828F01	1SS133		
	D619	48T44813F01	MA165TA		
	or	48T58583F01	1SS176		
	or	48T68828F01	1SS133		
	D620	48T44813F01	MA165TA		
	or	48T58583F01	1SS176		
	or	48T68828F01	1SS133		
●	D621	48T44813F01	MA165TA		
●	or	48T58583F01	1SS176		
●	or	48T68828F01	1SS133		
	D622	48T44813F01	MA165TA		
	or	48T58583F01	1SS176		
	or	48T68828F01	1SS133		
	D623	48T44813F01	MA165TA		
	or	48T58583F01	1SS176		
	or	48T68828F01	1SS133		
	D624	48T44813F01	MA165TA		
	or	48T58583F01	1SS176		
	or	48T68828F01	1SS133		

	Symbol No.	Part No.	Description		
	D625	48T44813F01	MA165TA		
	or	48T58583F01	1SS176		
	or	48T68828F01	1SS133		
	D626	48T44813F01	MA165TA		
	or	48T58583F01	1SS176		
	or	48T68828F01	1SS133		
	D627	48T44813F01	MA165TA		
	or	48T58583F01	1SS176		
	or	48T68828F01	1SS133		
	D628	48T44813F01	MA165TA		
	or	48T58583F01	1SS176		
	or	48T68828F01	1SS133		
	D629	48T44813F01	MA165TA		
	or	48T58583F01	1SS176		
	or	48T68828F01	1SS133		
	D631	48T44813F01	MA165TA		
	or	48T58583F01	1SS176		
	or	48T68828F01	1SS133		
■	D632	48T44813F01	MA165TA		
■	or	48T68828F01	1SS133		
■	or	48T58583F01	1SS176		
	D634	48T44813F01	MA165TA		
	or	48T58583F01	1SS176		
	or	48T68828F01	1SS133		
	D635	48T44813F01	MA165TA		
	or	48T58583F01	1SS176		
	or	48T68828F01	1SS133		
	D636	48T44813F01	MA165TA		
	or	48T58583F01	1SS176		
	or	48T68828F01	1SS133		
●	D637	48T44813F01	MA165TA		
●	or	48T58583F01	1SS176		
●	or	48T68828F01	1SS133		
	D638	48T52446F01	CP., MA151WK		
●	D640	48T44813F01	MA165TA		
●	or	48T58583F01	1SS176		
●	or	48T68828F01	1SS133		
	D641	48T44813F01	MA165TA		
	or	48T58583F01	1SS176		
	or	48T68828F01	1SS133		
	D642	48T52446F01	CP., MA151WK		
	D646	48T44813F01	MA165TA		
	or	48T58583F01	1SS176		
	or	48T68828F01	1SS133		
	D647	48T65992F01	CP., MA151K		

Note : ● ; 7385M CODE02 Model only ■ ; 7385L CODE02 Model only Others ; Common

	Symbol No.	Part No.	Description		
●	D649	48T44813F01	MA165TA		
●	or	48T58583F01	1SS176		
●	or	48T68828F01	1SS133		
	D650	48T44813F01	MA165TA		
	or	48T58583F01	1SS176		
	or	48T68828F01	1SS133		
	D701	48T52446F01	CP., MA151WK		
	D801	48T52446F01	CP., MA151WK		
	D803	48T44813F01	MA165TA		
	or	48T58583F01	1SS176		
	or	48T68828F01	1SS133		
	D804	48C40235G02	10E2		
	D805	48C40235G02	10E2		
	D806	48C40235G02	10E2		
	D812	48C40235G02	10E2		
	ZD605	48T68697F20	Zener HZS5.6EB1		
	ZD606	48T52739F31	Zener HZ5C-1		
	ZD608	48T68697F20	Zener HZS5.6EB1		
	ZD609	48T68697F20	Zener HZS5.6EB1		
	ZD610	48T68697F20	Zener HZS5.6EB1		
	ZD613	48T68697F20	Zener HZS5.6EB1		
●	ZD614	48T68697F20	Zener HZS5.6EB1		
	ZD616	48T83128F25	Zener HZS9C1L		
	ZD619	48T68697F20	Zener HZS5.6EB1		
	ZD801	48T83128F25	Zener HZS9C1L		
	ZD802	48T68697F38	Zener HZS10EB1		
	ZD804	48T68697F20	Zener HZS5.6EB1		
	ZD805	48T83128F06	Zener HZS6B3L		
●	ZD807	48T68697F37	Zener HZS9.1EB3		
	ZD808	48T68697F40	Zener HZS10EB3		
	DSP001	48T70875F02	Protector, DSP-201M		
	Coils				
	L001	24T50508F18	Inductor 4.7uH		
	L002	24T50508F24	Inductor 15uH		
	L003	24T42241U01	Dolby 23mH		
	L004	24T42241U01	Dolby 23mH		
	L005	24T50508F02	Inductor 0.22uH		
	L010	24T50508F10	Inductor 1μH		
	L801	25C40894G10	Choke Filter		
	L802	24T58149F02	Inductor 1.2mH		

	Symbol No.	Part No.	Description		
	Volume Controls				
	VR101	18T42748F13	Variable 10k ohm		
	VR102	18T42748F13	Variable 10k ohm		
●	VR301				
	-1 to		Volume, Balance,		
●	VR301	18T82522F01	Fader/Power,		
	-5		Play Program		
●	S301		Switch		
●	S302				
■	VR301				
	-1 to		Volume, Balance,		
■	VR301	18T82522F02	Fader/Power,		
	-5		Play Program		
■	S301		Switch		
■	S302				
	Switches				
■	S002	40T64365F01	Slide		
	S431	40T82548F01	Tact SKELAJ(PAUSE)		
	Capacitors				
	C001	23S61523F16	ELY	3.3μF/25V	
	C002	08S60102F28	CP	0.047μF	
	C003	08T65480F37	CER	100pF	
●	C004	23S61523F17	ELY	4.7μF/25V	
●	C005	08S53332F37	CP	1500pF	
	C006	23S61523F12	ELY	10μF/16V	
	C007	08S65128F61	CP	2200pF	
	C008	08T65480F53	CER	2200pF	
	C009	08S53332F41	CP	3300pF	
	C010	08S65128F63	CP	3300pF	
	C011	08S53332F42	CP	3900pF	
	C012	08S53332F42	CP	3900pF	
	C013	23S61523F29	ELY	1μF/50V	
	C014	23S61523F29	ELY	1μF/50V	
	C015	23S61523F12	ELY	10μF/16V	
	C016	08S53332F51	CP	0.022μF	
	C019	23S61523F25	ELY	0.1μF/50V	
	C020	08S60102F29	CP	0.056μF	
	C023	23S61523F12	ELY	10μF/16V	
	C024	23S61523F12	ELY	10μF/16V	

Note : ● ; 7385M CODE02 Model only ■ ; 7385L CODE02 Model only Others ; Common

	Symbol No.	Part No.	Description		
	C025	23S61523F12	ELY	10μF/16V	
●	C030	08S53332F47	CP	0.01μF	
■	C030	08S53332F46	CP	8200pF	
●	C031	08S53332F47	CP	0.01μF	
■	C031	08S53332F46	CP	8200pF	
●	C035	08T65480F61	CER	0.01μF	
●	C036	08S53332F47	CP	0.01μF	
	C040	08S53332F27	CP	220pF	
	C098	23S61523F12	ELY	10μF/16V	
	C099	21S40655F17	CER	33pF	
	C114	23T00133L01	ELY	10μF/16V	
	C115	23T00133L01	ELY	10μF/16V	
●	C322	08T42629F23	MYL	0.033μF	
■	C322	08T42629F79	MYL	0.1μF	
●	C323	08T42629F23	MYL	0.033μF	
■	C323	08T42629F79	MYL	0.1μF	
	C324	23S61523F12	ELY	10μF/16V	
	C325	23T00134L64	ELY	2.2μF/50V	
	C326	23T00134L64	ELY	2.2μF/50V	
	C327	23T00134L64	ELY	2.2μF/50V	
	C328	23T00134L64	ELY	2.2μF/50V	
	C329	23T00133L01	ELY	10μF/16V	
	C330	23T00133L01	ELY	10μF/16V	
	C331	23T00133L01	ELY	10μF/16V	
	C332	23T00133L01	ELY	10μF/16V	
	C333	23T00133L01	ELY	10μF/16V	
	C334	23T00133L01	ELY	10μF/16V	
●	C550	23S61523F15	ELY	47μF/16V	
	C629	23T74437F49	TAN	1μF/35V	
●	C630	23S61523F34	ELY	100μF/10V	
	C632	23S61523F12	ELY	10μF/16V	
	C634	23S61523F34	ELY	100μF/10V	
	C636	23T41366F41	ELY	(BP) 2.2μF/50V	
	C637	08S53332F47	CP	0.01μF	
	C638	08S65128F69	CP	0.01μF	
	C639	23T74437F46	TAN	0.33μF/50V	
	C640	08S60102F28	CP	0.047μF	
	C641	08T50579F27	TF	0.47μF	
	C642	23S61523F13	ELY	22μF/16V	
	C643	08S53332F15	CP	22pF	
	C644	08S53332F15	CP	22pF	
	C645	23T41366F42	ELY	(BP) 3.3μF/50V	
	C647	23S61523F28	ELY	0.47μF/50V	
●	C649	23C42170G32	ELY	470μF/10V	
	C802	23S61523F11	ELY	47μF/10V	

	Symbol No.	Part No.	Description		
	C803	08S53332F47	CP	0.01μF	
	C808	23S57422F05	ELY	1μF/50V	
	C809	23T00134L18	ELY	220μF/10V	
●	C810	23S61523F29	ELY	1μF/50V	
	C811	23T00135L33	ELY	2200μF/16V	
	C812	23T00134L36	ELY	1000μF/16V	
	C814	23S61523F25	ELY	0.1μF/50V	
	C815	23S61523F11	ELY	47μF/10V	
	C817	23T00133L01	ELY	10μF/16V	
	C818	23C44780P20	ELY	100μF/10V	
	C821	08S65128F69	CP	0.01μF	
	C822	08S53332F57	CP	0.1μF	
	C823	08S65128F69	CP	0.01μF	
	C899	08S53332F47	CP	0.01μF	
	Resistors				
	R001	06S53330F93	CP	47k ohm 1/8W	
	R002	06S53330F53	CP	1k ohm 1/8W	
	R003	06S53330F69	CP	4.7k ohm 1/8W	
	R004	06S53331F10	CP	220k ohm 1/8W	
	R005	06S53330F37	CP	220 ohm 1/8W	
	R006	06S64995F29	CP	100 ohm 1/16W	
●	R007	06S64995F99	CP	82k ohm 1/16W	
●	R008	06S64995F85	CP	22k ohm 1/16W	
●	R009	06S53330F63	CP	2.7k ohm 1/8W	
●	R010	06S64995F53	CP	1k ohm 1/16W	
●	R011	06S53330F69	CP	4.7k ohm 1/8W	
	R012	06S53330F77	CP	10k ohm 1/8W	
●	R014	06S64995F61	CP	2.2k ohm 1/16W	
■	R014	06S64995F65	CP	3.3k ohm 1/16W	
	R015	06S64995F71	CP	5.6k ohm 1/16W	
	R016	06S64995F71	CP	5.6k ohm 1/16W	
■	R017	06S53330F69	CP	4.7k ohm 1/8W	
■	R018	06S64995F69	CP	4.7k ohm 1/16W	
	R019	06S53330F85	CP	22k ohm 1/8W	
	R020	06S53330F85	CP	22k ohm 1/8W	
	R021	06S53330F77	CP	10k ohm 1/8W	
	R022	06S53330F77	CP	10k ohm 1/8W	
	R023	06S53330F53	CP	1k ohm 1/8W	
	R024	06S53330F77	CP	10k ohm 1/8W	
	R026	06S53330F87	CP	27k ohm 1/8W	
	R028	06S53330F85	CP	22k ohm 1/8W	
	R029	06S53330F79	CP	12k ohm 1/8W	
	R030	06S53330F69	CP	4.7k ohm 1/8W	
	R035	06S64995F85	CP	22k ohm 1/16W	
●	R321	06S53330F71	CP	5.6k ohm 1/8W	

Note : ● ; 7385M CODE02 Model only ■ ; 7385L CODE02 Model only Others ; Common

	Symbol No.	Part No.	Description			
■	R321	06S53330F59	CP	1k ohm 1/8W		
●	R322	06S53330F71	CP	5.6k ohm 1/8W		
■	R322	06S53330F59	CP	1k ohm 1/8W		
	R323	06S53330F37	CP	220 ohm 1/8W		
	R324	06S53330F37	CP	220 ohm 1/8W		
	R325	06S64995F67	CP	3.9k ohm 1/16W		
	R326	06S64995F67	CP	3.9k ohm 1/16W		
	R327	06S64995F67	CP	3.9k ohm 1/16W		
	R328	06S64995F67	CP	3.9k ohm 1/16W		
	R329	06S64995F77	CP	10k ohm 1/16W		
	R331	06S53330F77	CP	10k ohm 1/8W		
●	R332	06S53330F65	CP	3.3k ohm 1/8W		
	R335	06S53330F77	CP	10k ohm 1/8W		
	R338	06S53331F02	CP	100k ohm 1/8W		
	R339	06S53331F02	CP	100k ohm 1/8W		
	R340	06S53331F02	CP	100k ohm 1/8W		
	R341	06S53331F02	CP	100k ohm 1/8W		
	R342	06S53330F75	CP	8.2k ohm 1/8W		
	R343	06S53330F75	CP	8.2k ohm 1/8W		
	R344	06S53330F75	CP	8.2k ohm 1/8W		
	R345	06S53330F75	CP	8.2k ohm 1/8W		
	R346	06S53330F85	CP	22k ohm 1/8W		
	R347	06S53330F85	CP	22k ohm 1/8W		
	R348	06S53330F85	CP	22k ohm 1/8W		
	R349	06S53330F85	CP	22k ohm 1/8W		
	R350	06S53330F27	CP	82 ohm 1/8W		
	R351	06S53330F37	CP	220 ohm 1/8W		
	R352	06S53330F37	CP	220 ohm 1/8W		
	R353	06S53330F37	CP	220 ohm 1/8W		
	R354	06S53330F37	CP	220 ohm 1/8W		
	R355	06S53330F85	CP	22k ohm 1/8W		
	R356	06S53330F85	CP	22k ohm 1/8W		
	R357	06S53330F85	CP	22k ohm 1/8W		
	R358	06S53330F85	CP	22k ohm 1/8W		
	R359	06S53330F37	CP	220 ohm 1/8W		
	R360	06S53330F37	CP	220 ohm 1/8W		
	R361	06S53330F37	CP	220 ohm 1/8W		
	R362	06S53330F37	CP	220 ohm 1/8W		
	R363	06S53330F77	CP	10k ohm 1/8W		
	R364	06S53330F77	CP	10k ohm 1/8W		
	R365	06S53330F77	CP	10k ohm 1/8W		
	R366	06S53330F77	CP	10k ohm 1/8W		
	R370	06S64996F26	CP	1M ohm 1/16W		
	R502	06S53330F69	CP	4.7k ohm 1/8W		
	R521	06S53330F77	CP	10k ohm 1/8W		

	Symbol No.	Part No.	Description			
●	R523	06S53330F77	CP	10k ohm 1/8W		
	R547	06S53330F41	CP	330 ohm 1/8W		
	R548	06S53330F41	CP	330 ohm 1/8W		
	R549	06S53331F02	CP	100k ohm 1/8W		
	R550	06S53331F02	CP	100k ohm 1/8W		
●	R562	06S64995F61	CP	2.2k ohm 1/16W		
■	R562	06S64995F77	CP	10k ohm 1/16W		
	R643	06S53330F77	CP	10k ohm 1/8W		
	R644	06S53330F77	CP	10k ohm 1/8W		
	R645	06S64995F77	CP	10k ohm 1/16W		
	R647	06S64995F77	CP	10k ohm 1/16W		
	R648	06S53330F77	CP	10k ohm 1/8W		
	R649	06S53330F77	CP	10k ohm 1/8W		
	R650	06S53330F77	CP	10k ohm 1/8W		
	R653	06S64995F77	CP	10k ohm 1/16W		
	R654	06S53330F83	CP	18k ohm 1/8W		
	R658	06S64995F77	CP	10k ohm 1/16W		
	R662	06S64995F77	CP	10k ohm 1/16W		
	R669	06S53330F77	CP	10k ohm 1/8W		
	R670	06S53330F93	CP	47k ohm 1/8W		
	R671	06S64995F53	CP	1k ohm 1/16W		
	R672	06S64995F65	CP	3.3k ohm 1/16W		
	R673	06S64995F65	CP	3.3k ohm 1/16W		
	R674	06S53330F05	CP	10 ohm 1/8W		
	R675	06S53330F53	CP	1k ohm 1/8W		
	R676	06S53330F53	CP	1k ohm 1/8W		
	R677	06S53331F26	CP	1M ohm 1/8W		
	R678	06S53330F63	CP	2.7k ohm 1/8W		
	R679	06S64995F61	CP	2.2k ohm 1/16W		
	R680	06S64995F71	CP	5.6k ohm 1/16W		
	R681	06S53330F47	CP	560 ohm 1/8W		
	R684	06S53330F65	CP	3.3k ohm 1/8W		
	R685	06S64995F05	CP	10 ohm 1/16W		
●	R686	06S64995F77	CP	10k ohm 1/16W		
	R687	06S53330F69	CP	4.7k ohm 1/8W		
	R688	06S64995F85	CP	22k ohm 1/16W		
	R689	06S64995F85	CP	22k ohm 1/16W		
●	R690	06S53330F77	CP	10k ohm 1/8W		
●	R691	06S53330F61	CP	2.2k ohm 1/8W		
	R695	06S64995F77	CP	10k ohm 1/16W		
	R697	06S53330F77	CP	10k ohm 1/8W		
	R698	06S64995F85	CP	22k ohm 1/16W		
	R809	06S64996F02	CP	100k ohm 1/16W		
	R810	06S64995F77	CP	10k ohm 1/16W		
	R812	06S53331F10	CP	220k ohm 1/8W		

Note : ● ; 7385M CODE02 Model only ■ ; 7385L CODE02 Model only Others ; Common

	Symbol No.	Part No.	Description			
	R813	06S53331F10	CP	220k ohm 1/8W		
	R814	06S53330F67	CP	3.9k ohm 1/8W		
●	R816	06S53330F53	CP	1k ohm 1/8W		
	R817	06S53330F37	CP	220 ohm 1/8W		
	R818	06S53330F53	CP	1k ohm 1/8W		
	R819	06S53330F61	CP	2.2K ohm 1/8W		
	R820	06S53330F77	CP	10k ohm 1/8W		
	R821	06S53330F77	CP	10k ohm 1/8W		
	R822	06S53330F87	CP	27k ohm 1/8W		
●	R990	06T84878F79	Block 2.2k ohm x 4			
	Crystal					
	X601	48T55073F01	4.5MHz-K			
			Pre-Amp P.C. Board			
	IC					
	IC101	51T64606F01	TA7705F			
	Transistor					
	Q101	48T62967F02	DTC-114K			
	Diode					
	D101	48T68828F01	DIO 1SS133			
	Capacitors					
	C101	08T74631F07	PP	180pF		
	C102	08T74631F07	PP	180pF		
	C103	08T74631F07	PP	180pF		
	C104	08T74631F07	PP	180pF		
	C105	23T61512F04	ELY	100μF/ 6.3V		
	C106	23T61512F04	ELY	100μF/ 6.3V		
	C107	23S57007F09	ELY	10μF/16V		
	C108	08T52448F38	PP	0.011μF		
	C109	08T52448F38	PP	0.011μF		
	C110	23S61524F18	ELY	4.7μF/25V		
	C111	23T00134L32	ELY	100μF/16V		
	C112	08S53332F51	CP	0.022μF		
	C113	08S53332F29	CP	330pF		
	C114	08S53332F57	CP	0.1μF		

Symbol No.	Part No.	Description			
Resistors					
R101	06S53330F97	CP	68k ohm 1/8W		
R102	06S53330F97	CP	68k ohm 1/8W		
R103	06S53330F97	CP	68k ohm 1/8W		
R104	06S53330F97	CP	68k ohm 1/8W		
R105	06S53330F37	CP	220 ohm 1/8W		
R106	06S53330F37	CP	220 ohm 1/8W		
R107	06S53331F14	CP	330k ohm 1/8W		
R108	06S53331F14	CP	330k ohm 1/8W		
R109	06S53330F79	CP	12k ohm 1/8W		
R110	06S53330F79	CP	12k ohm 1/8W		
R111	06S53330F80	CP	13k ohm 1/8W		
R112	06S53330F80	CP	13k ohm 1/8W		
R113	06S53330F85	CP	22k ohm 1/8W		
R114	06S53330F81	CP	15k ohm 1/8W		
R115	06S53330F81	CP	15k ohm 1/8W		
R116	06S53330F29	CP	100 ohm 1/8W		
R117	06S53330F89	CP	33k ohm 1/8W		
R118	06S53330F85	CP	22k ohm 1/8W		
R119	06S53330F85	CP	22k ohm 1/8W		
			Front P.C. Board		
Transistor					
Q401	48T72752F01	CP 2SD1757K			
LED & Lamps					
LD401	48T51833F03	LED BG4524K(GRN)			
LD402	48T51833F03	LED BG4524K(GRN)			
LD403	48T51833F03	LED BG4524K(GRN)			
LD404	48T51833F03	LED BG4524K(GRN)			
LD405	48T51833F03	LED BG4524K(GRN)			
LD406	48T51833F03	LED BG4524K(GRN)			
LD407	48T51833F03	LED BG4524K(GRN)			
LD408	48T51833F03	LED BG4524K(GRN)			
LD409	48T51833F03	LED BG4524K(GRN)			
LD410	48T51833F03	LED BG4524K(GRN)			
LD411	48T51833F03	LED BG4524K(GRN)			
LD412	48T51833F03	LED BG4524K(GRN)			
LD413	48T52953F01	LED BR3432S(RED)			
LD414	48T52953F01	LED BR3432S(RED)			
PL401	65T95083F01	Pilot 6.7V-85mA			
PL402	65T95274F02	Pilot 6V-70mA			
PL403	65T95274F02	Pilot 6V-70mA			
PL404	65T95274F02	Pilot 6V-70mA			
PL405	65T80297F05	Pilot 6V-65mA			

Note : ● ; 7385M CODE02 Model only ■ ; 7385L CODE02 Model only Others ; Common

Symbol No.	Part No.	Description		
Switches				
S402	40T70366F01	TACT KHL-10906(FF)		
S403	40T70366F01	TACT KHL-10906(REW)		
S404	40T70366F01	TACT KHL-10906(EJECT)		
S405	40T70366F01	TACT KHL-10906(SEEK)		
S406	40T70366F01	TACT KHL-10906(M5)		
S407	40T70366F01	TACT KHL-10906(M1(MS))		
S408	40T70366F01	TACT KHL-10906(LOUD(SDK))		
S409	40T70366F01	TACT KHL-10906(UP)		
S410	40T70366F01	TACT KHL-10906(M6)		
S411	40T70366F01	TACT KHL-10906(M2(B))		
S412	40T70366F01	TACT KHL-10906(DX)		
S413	40T70366F01	TACT KHL-10906(DN)		
S414	40T70366F01	TACT KHL-10906(M3(C))		
S415	40T70366F01	TACT KHL-10906(ST)		
S416	40T70366F01	TACT KHL-10906(ME)		
S417	40T70366F01	TACT KHL-10906 (TAPE/PAUSE)		
S418	40T70366F01	TACT KHL-10906(M4)		
S419	40T70366F01	TACT KHL-10906(BAND)		
S420 LD420	40T67523F07	TACT KHQ-11908(ORG) [DIMMER]		
Volume Controls				
VR202-1 to VR202-4 LD415 LD416	18T82527F01	Slide 100k ohm(GRN)		
Resistors				
R401	06T70072F17	CP 33 ohm 1/4W		
R402	06T70072F19	CP 39 ohm 1/4W		
R403	06T70072F47	CP 560 ohm 1/4W		
R404	06T70072F47	CP 560 ohm 1/4W		
R405	06T70072F47	CP 560 ohm 1/4W		
R406	06T70072F47	CP 560 ohm 1/4W		
R407	06T70072F47	CP 560 ohm 1/4W		
R408	06T70072F47	CP 560 ohm 1/4W		
R409	06T70072F49	CP 680 ohm 1/4W		
R410	06T70072F51	CP 820 ohm 1/4W		
R411	06T70072F25	CP 68 ohm 1/4W		
R412	06T70072F25	CP 68 ohm 1/4W		
R413	06T70072F41	CP 330 ohm 1/4W		

Symbol No.	Part No.	Description		
Dolby P.C. Board				
IC				
IC202	51T74055F01	CX20188		
Transistors				
Q202	48T62967F03	CP DTC124K		
Q203	48T62967F03	CP DTC124K		
Capacitors				
C202	23T43247F10	ELY 22μF/16V		
C203	23T00133L01	ELY 10μF/16V		
C204	23T00133L01	ELY 10μF/16V		
C205	23T61512F04	ELY 100μF/ 6.3V		
C206	08T57705F59	MYL 2200pF		
C207	08T57705F59	MYL 2200pF		
C208	08T57705F62	MYL 3900pF		
C209	23S57007F04	ELY 0.47μF/50V		
C210	08T57705F81	MYL 0.15μF		
C211	08T57705F69	MYL 0.015μF		
C212	23T61512F22	ELY 0.22μF/50V		
C213	08T42629F77	MYL 0.068μF		
C214	08T42629F76	MYL 0.056μF		
C215	08T57705F64	MYL 5600pF		
C216	08T57705F67	MYL 0.01μF		
C217	08T57705F67	MYL 0.01μF		
C218	08T57705F64	MYL 5600pF		
C219	08T57705F76	MYL 0.056μF		
C220	08T57705F77	MYL 0.068μF		
C221	23S57007F02	ELY 0.22μF/50V		
C222	08T42629F19	MYL 0.015μF		
C223	08T57705F81	MYL 0.15μF		
C224	23S57007F04	ELY 0.47μF/50V		
C225	08T57705F62	MYL 3900pF		
C226	08T57705F59	MYL 2200pF		
C227	08T57705F59	MYL 2200pF		
C228	23S57007F16	ELY 100μF/ 6.3V		
C229	23T00149L13	ELY 100μF/10V		

Note : ● ; 7385M CODE02 Model only ■ ; 7385L CODE02 Model only Others ; Common

	Symbol No.	Part No.	Description		
Resistors					
	R203	06S53330F79	CP 12k ohm 1/8W		
	R204	06S53330F75	CP 8.2k ohm 1/8W		
	R205	06S53330F29	CP 100 ohm 1/8W		
	R206	06S53330F85	CP 22k ohm 1/8W		
	R207	06S53330F60	CP 2k ohm 1/8W		
	R208	06S53330F83	CP 18k ohm 1/8W		
	R209	06S53330F63	CP 2.7k ohm 1/8W		
	R210	06S53330F65	CP 3.3k ohm 1/8W		
	R211	06S53330F47	CP 560 ohm 1/8W		
	R212	06S53331F26	CP 1M ohm 1/8W		
	R213	06S53330F85	CP 22k ohm 1/8W		
	R214	06S53330F74	CP 7.5k ohm 1/8W		
	R215	06S53330F49	CP 680 ohm 1/8W		
	R216	06S53330F76	CP 9.1k ohm 1/8W		
	R217	06S53330F49	CP 680 ohm 1/8W		
	R218	06S53330F76	CP 9.1k ohm 1/8W		
	R219	06S53330F74	CP 7.5k ohm 1/8W		
	R220	06S53330F85	CP 22k ohm 1/8W		
	R221	06S53330F47	CP 560 ohm 1/8W		
	R222	06S53331F26	CP 1M ohm 1/8W		
	R223	06S53330F63	CP 2.7k ohm 1/8W		
	R224	06S53330F65	CP 3.3k ohm 1/8W		
	R225	06S53330F83	CP 18k ohm 1/8W		
	R226	06S53330F60	CP 2k ohm 1/8W		
	R227	06S53330F85	CP 22k ohm 1/8W		
	R228	06S53331F05	CP 130k ohm 1/8W		
SDK P.C. Board					
IC's					
●	IC1601	51T82523F01	TDA1579		
●	IC1602	51T83062F01	NJM2902N		
●	IC1603	51T47739F01	TC4066BP		
Transistors					
●	Q1601	48T62967F08	CP DTC144W		
●	Q1602	48T52438F02	CP 2SD601A		
●	Q1604	48T62967F03	CP DTC124K		
●	or	48T64222F02	CP UN2212		
●	Q1605	48T62967F03	CP DTC124K		
●	or	48T64222F02	CP UN2212		
●	Q1607	48T62967F08	CP DTC144W		

	Symbol No.	Part No.	Description		
Diodes					
●	D1601	48T44813F01	MA165TA		
●	or	48T68828F01	1SS133		
●	or	48T58583F01	1SS176		
●	D1604	48T44813F01	MA165TA		
●	or	48T68828F01	1SS133		
●	or	48T58583F01	1SS176		
●	D1643	48T44813F01	MA165TA		
●	or	48T68828F01	1SS133		
●	or	48T58583F01	1SS176		
●	D1644	48T52444F01	CP MA151A		
●	D1645	48T52445F01	CP MA151WA		
●	D1646	48T52446F01	CP MA151WK		
●	ZD1602	48T68697F23	Zener HZS6.2EB1		
Volume Control					
●	VR1601	18T42748F02	150 ohm		
Coil					
●	L1601	24T84175F01	SDK (57kHz)		
Capacitors					
●	C1505	23S57007F12	ELY 33μF/10V		
●	C1603	08T42629F75	MYL 0.047μF		
●	C1604	08T57705F73	MYL 0.033μF		
●	C1605	23S57007F01	ELY 0.1μF/50V		
●	C1606	08S53332F57	CP 0.1μF		
●	C1607	08S53332F57	CP 0.1μF		
●	C1608	08T57851F13	TF 0.1μF		
●	C1609	08T42629F75	MYL 0.047μF		
●	C1610	08T57705F77	MYL 0.068μF		
●	C1611	08T57705F77	MYL 0.068μF		
●	C1612	23T61512F21	ELY 0.1μF/50V		
●	C1616	08S65128F69	CP 0.01μF		
●	C1617	08S65128F74	CP 0.047μF		
●	C1619	23T61513F16	ELY 4.7μF/25V		
●	C1620	23S40657F07	ELY 47μF/10V		
●	C1621	23T61512F08	ELY 10μF/16V		
●	C1622	08S65128F73	CP 0.033μF		

Note : ● ; 7385M CODE02 Model only ■ ; 7385L CODE02 Model only Others ; Common

	Symbol No.	Part No.	Description			
	Resistors					
●	R1527	06S53330F41	CP	330 ohm 1/8W		
●	R1529	06S64995F89	CP	33k ohm 1/16W		
●	R1530	06S64995F89	CP	33k ohm 1/16W		
●	R1534	06S64995F89	CP	33k ohm 1/16W		
●	R1537	06S64995F65	CP	3.3k ohm 1/16W		
●	R1538	06S64996F04	CP	120k ohm 1/16W		
●	R1539	06S64996F02	CP	100k ohm 1/16W		
●	R1540	06S53331F03	CP	110k ohm 1/8W		
●	R1541	06S64995F92	CP	43k ohm 1/16W		
●	R1542	06S53331F04	CP	120k ohm 1/8W		
●	R1543	06S53331F03	CP	110k ohm 1/8W		
●	R1544	06S64996F02	CP	100k ohm 1/16W		
●	R1545	06S64995F91	CP	39k ohm 1/16W		
●	R1546	06S64995F64	CP	3.3k ohm 1/16W		
●	R1560	06S64995F83	CP	18k ohm 1/16W		
●	R1601	06S64995F77	CP	10k ohm 1/16W		
●	R1602	06S53331F04	CP	120k ohm 1/8W		
●	R1603	06S64995F97	CP	68k ohm 1/16W		
●	R1604	06S64996F22	CP	680k ohm 1/16W		
●	R1608	06S64995F97	CP	68k ohm 1/16W		
●	R1609	06S64995F97	CP	68k ohm 1/16W		
●	R1611	06S53330F69	CP	4.7k ohm 1/8W		
●	R1612	06S64996F02	CP	100k ohm 1/16W		
●	R1613	06S53330F93	CP	47k ohm 1/8W		
●	R1614	06S53331F22	CP	680k ohm 1/8W		
●	R1616	06S64995F91	CP	39k ohm 1/16W		
●	R1617	06S64995F43	CP	390 ohm 1/16W		
●	R1618	06S53331F10	CP	220k ohm 1/8W		
●	R1627	06S64995F85	CP	22k ohm 1/16W		
●	R1629	06S53330F53	CP	1k ohm 1/8W		
●	R1631	06S53330F77	CP	10k ohm 1/8W		
●	R1632	06S53330F84	CP	20k ohm 1/8W		
●	R1633	06S53330F71	CP	5.6k ohm 1/8W		
●	R1634	06S53331F26	CP	1M ohm 1/8W		
●	R1635	06S53331F26	CP	1M ohm 1/8W		
	Tone P.C. Board					
	IC					
	IC301	51T69242F01	NJM5532M			
	Diode					
	D330	48T44813F01	MA165TA			
	or	48T68828F01	1SS133			
	or	48T58583F01	1SS176			

	Symbol No.	Part No.	Description			
	Capacitors					
	C301	08T52448F03	PP	390pF		
	C302	08T57705F78	MYL	0.082μF		
	C303	08T52448F03	PP	390pF		
	C304	08T57705F78	MYL	0.082μF		
	C305	08T52448F01	PP	330pF		
	C306	08T42629F31	MYL	0.15μF		
	C307	08T52448F01	PP	330pF		
	C308	08T57705F81	MYL	0.15μF		
	C309	23T00133L01	ELY	10μF/16V		
	C310	23T00133L01	ELY	10μF/16V		
	C311	23T00133L01	ELY	10μF/16V		
	C312	08T72783F14	CP	18pF		
	C313	08T72783F14	CP	18pF		
	C336	23T00133L01	ELY	10μF/16V		
	C337	23T00133L01	ELY	10μF/16V		
	C350	23S41198U40	ELY	220μF/10V		
	Resistors					
	R301	06S53330F71	CP	5.6k ohm 1/8W		
	R302	06S53330F71	CP	5.6k ohm 1/8W		
	R303	06S53330F71	CP	5.6k ohm 1/8W		
	R304	06S53330F71	CP	5.6k ohm 1/8W		
	R305	06S53330F71	CP	5.6k ohm 1/8W		
	R306	06S53330F71	CP	5.6k ohm 1/8W		
	R307	06S53330F71	CP	5.6k ohm 1/8W		
	R308	06S53330F71	CP	5.6k ohm 1/8W		
	R309	06S53330F91	CP	39k ohm 1/8W		
	R310	06S53330F91	CP	39k ohm 1/8W		
	R311	06S53331F26	CP	1M ohm 1/8W		
	R312	06S53331F26	CP	1M ohm 1/8W		
	R314	06S53330F05	CP	10 ohm 1/8W		
	R315	06S53330F05	CP	10 ohm 1/8W		
	Switching P.C. Board					
	IC					
■	IC1503	51T47739F01	TC4066BP			
	Transistors					
■	Q1501	48T62967F03	CP DTC124K			
■	Q1502	48T62967F03	CP DTC124K			

Note : ● ; 7385M CODE02 Model only ■ ; 7385L CODE02 Model only Others ; Common

Symbol No.	Part No.	Description
Diode		
■ ZD1501	48T68697F23	Zener HZS6.2EB1
Resistors		
■ R1565	06S53330F77	CP 10k ohm 1/8W
■ R1566	06S53330F77	CP 10k ohm 1/8W
GZ Control P.C. Board		
IC's		
IC701	51T71799F01	71799F01
IC702	51T71802F01	71802F01
Transistors		
Q701	48T52547F02	2SB793A
Q702	48T62967F03	CP DTC124K
Diodes		
D701	48T52445F01	CP MA151WA
D702	48T52446F01	CP MA151WK
ZD701	48T68697F54	Zener HZS16EB1
ZD702	48T62934F29	Zener CP RD6.8MB3
Capacitors		
C701	23T82482F02	ELY 100μF/16V
C702	23S61523F12	ELY 10μF/16V
C703	08T50579F09	TP. 0.047μF
C704	23S61523F15	ELY 47μF/16V
C705	08S53332F53	CP 0.033μF
C706	08S53332F47	CP 0.01μF
C707	08S53332F57	CP 0.1μF
Resistors		
R701	06S81094F09	MF 4.7 ohm 1/2W
R702	06S81094F65	MF 1k ohm 1/2W
R703	06S53330F77	CP 10k ohm 1/8W
R704	06S81094F05	MF 3.3 ohm 1/2W
R706	06S53330F77	CP 10k ohm 1/8W
R708	06S64995F94	CP 51k ohm 1/16W
R709	06S53330F85	CP 22k ohm 1/8W
R710	06S53330F71	CP 5.6k ohm 1/8W
R711	06S53330F29	CP 100 ohm 1/8W
R712	06S53331F12	CP 270k ohm 1/8W
R713	06S53331F31	CP 2.7W ohm 1/8W
Reverse P.C. Board		
PT701	51T63433F01	Sensor, Photo
PT702	51T63433F01	Sensor, Photo
Regulator P.C. Board		
IC		
IC401	51T40391U01	TC4013P
Transistors		
Q402	48S40627U01	2SD636
Q403	48T56031F01	2SD1266
Diodes		
ZD401	48T83128F06	Zenner HZS6B3L
ZD402	48T83128F28	Zenner HZS11A1L
Capacitors		
C401	23S61523F29	ELY., 1μF/50V
C402	23S61523F09	ELY., 22μF/10V
C403	08S53332F43	CP., 4700pF
C404	23S57422F05	ELY., 1μF/50V
Resistors		
R414	06S53330F77	CP., 10k ohm 1/8W
R415	06S53330F77	CP., 10k ohm 1/8W
R416	06S53330F49	CP., 680 ohm 1/8W
R417	06S53330F77	CP., 10k ohm 1/8W
R418	06S53330F45	CP., 470 ohm 1/8W
R419	06T93535F21	MF, 15 ohm 1/2W
R420	06S53331F10	CP., 220k ohm 1/8W

Note : ● ; 7385M CODE02 Model only ■ ; 7385L CODE02 Model only Others ; Common

Symbol No.	Part No.	Description		
		Miscellaneous		
LCD401	65T94399F01	LCD, Display LU1397		
● E801	01T94806F03	Assy., Conn. QRB (B) 28P		
■ E801	01T94806F02	Assy., Conn. QRB (B) 28P		
BA601	60T83249F01	Battery Lit. BR2032		
or	60T91060F03	Battery Lit. CR2032		
M701	01V71800F20	Assy., Motor		
M702	01V83500F82	Assy., RF Motor		
HD701	88T74470F01	Head		
S701	40T52216F01	Switch, Micro (Pack in)		
S702	40T60329F02	Switch, Leaf (Eject,Pack in)		
S704	40T63432F01	Switch, Slide (For/Rev.)		
S705	40T71025F03	Switch, Detector (Metal Position)		
S706	40T71025F03	Switch, Detector (Metal Position)		
SD701	01A63213F01	Assy., Porgram Solenoid		
SD702	01A63215F01	Assy., Eject Solenoid		
SD703	01A63212F01	Assy., Play Solenoid		
SD704	01A63214F01	Assy., RF Solenoid		
ZD101	48T40150U58	Dio., Zener HZ11C-1		

Symbol No.	Part No.	Description		

Note : ● ; 7385M CODE02 Model only ■ ; 7385L CODE02 Model only Others ; Common

Electrical Parts List (7385ECODE02)

Resistor: Carbon resistors under 1/4 watts are not mentioned in the parts list, please confirm them by schematic diagram.
Capacitor: μF=microfarads, pF=picofarads

Abbreviations

CP.=Chip
ELY.=Electrolytic
CER.=Ceramic
MYL.=Mylar
PP.=Polypropylene
CONN.=Connector
μF.=Microfarads
P.=Picofarads

Symbol No.	Part No.	Description
		Pre-Amp P.C. Board
IC		
IC101	51T64606F01	TA7705F
Transistor		
Q101	48T62967F02	CP DTC114K
Diode		
D101	48T68828F01	1SS133
Capacitors		
C101	08T74631F07	PP 180pF
C102	08T74631F07	PP 180pF
C103	08T74631F07	PP 180pF
C104	08T74631F07	PP 180pF
C105	23T61512F04	ELY 100μF/ 6.3V
C106	23T61512F04	ELY 100μF/ 6.3V
C107	23S57007F09	ELY 10μF/16V
C108	08T52448F38	PP 0.011μF
C109	08T52448F38	PP 0.011μF
C110	23S61524F18	ELY 4.7μF/25V
C111	23T00134L32	ELY 100μF/16V
C112	08S53332F51	CP 0.022μF
c113	08S53332F29	CP 330pF
C114	08S53332F57	CP 0.1μF
Resistors		
R101	06S53330F97	CP 68k ohm 1/8W
R102	06S53330F97	CP 68k ohm 1/8W
R103	06S53330F97	CP 68k ohm 1/8W
R104	06S53330F97	CP 68k ohm 1/8W
R105	06S53330F37	CP 220 ohm 1/8W
R106	06S53330F37	CP 220 ohm 1/8W
R107	06S53331F14	CP 330k ohm 1/8W
R108	06S53331F14	CP 330k ohm 1/8W
R109	06S53330F79	CP 12k ohm 1/8W
R110	06S53330F79	CP 12k ohm 1/8W
R111	06S53330F80	CP 13k ohm 1/8W
R112	06S53330F80	CP 13k ohm 1/8W
R113	06S53330F85	CP 22k ohm 1/8W
R114	06S53330F81	CP 15k ohm 1/8W
R115	06S53330F81	CP 15k ohm 1/8W
R116	06S53330F29	CP 100 ohm 1/8W
R117	06S53330F89	CP 33k ohm 1/8W
R118	06S53330F85	CP 22k ohm 1/8W
R119	06S53330F85	CP 22k ohm 1/8W
		Main Control P.C. Board
IC's		
IC201	51T73937F01	μPD4052BG
IC302	51T80136F01	M5238P
IC303	51T80136F01	M5238P
IC601	51T92808F01	92808F01
IC602	51T47739F01	TC4066BP
IC801	51T73718F02	NJM4560D
Transistors		
Q001	48T62967F03	CP DTC124K
or	48T64222F02	CP UN2212
Q002	48T63417F01	CP 2SC2412K
Q003	48T62966F02	CP DTA143
Q004	48T82429F01	CP 2SC3142
Q201	48T82758F02	CP 2SC4038
Q301	48T62967F03	CP DTC124k
or	48T64222F02	CP UN2212
Q302	48T62967F03	CP STC124k
or	48T64222F02	CP UN2212
Q303	48T62967F03	CP DTC343T
Q304	48T62967F33	CP DTC343T
Q305	48T57337F03	2SD1330
Q306	48T57337F03	2SD1330
Q307	48T57337F03	2SD1330
Q308	48T57337F03	2SD1330
Q601	48T42182U01	2SD661
Q602	48T42182U01	2SD661
Q603	48T63417F01	CP 2SC2412K
Q604	48T63417F01	CP 2SC2412K
Q605	48T63420F01	CP 2SA1037K
Q606	48T63420F01	CP 2SA1037K
Q607	48T63420F01	CP 2SA1037K
Q608	48T63420F01	CP 2SA1037K

Symbol No.	Part No.	Description
Q609	48T62967F03	CP DTC124K
or	48T64222F02	CP UN2212
Q610	48T62967F03	CP 2SC2412K
or	48T64222F02	CP UN2212
Q611	48T63417F01	CP 2SC2412K
Q612	48T62966F02	CP DTA114
or	48T64221F01	CP UN2111
Q613	48T62966F02	CP DTA114
or	48T64221F01	CP UN2111
Q614	48T62967F09	CP DTC114TK
or	48T64222F05	CP UM2215
Q615	48T62967F03	CP DTC124K
or	48T64222F02	CP UN2212
Q616	48T62967F03	CP DTC124K
or	48T64222F02	CP UN2212
Q617	48T62967F03	CP DTC124K
or	48T64222F02	CP UN2212
Q618	48T82758F02	2SC4038
Q619	48T63417F03	CP 2SC2412K
Q620	48T62967F03	CP DTC124K
or	48T64222F02	CP UN2212
Q621	48T62967F03	CP DTC124K
or	48T64222F02	CP UN2212
Q623	48T62967F08	CP DTC144W
Q801	48T83416F03	2SB1278
Q802	48T62967F03	CP DTC124K
or	48T64222F02	CP UN2212
Q803	48T83414F04	2SD1860
Q804	48T83414F04	2SD1860
Q805	48T62967F03	CP DTC124K
or	48T64222F02	CP UN2212
Q806	48T62967F03	CP DTC124K
or	48T64222F02	CP UN2212
Q807	48T63788F01	CP 2SD1328
Diodes/Protector		
D002	48T58583F01	1SS176
or	48T68828F01	1SS133
D003	48T58583F01	1SS176
or	48T68828F01	1SS133
D004	48T52446F01	CP MA151WK
or	48T63462F01	CP DAN202K
D605	48T52445F01	CP MA151WA
or	48T63463F01	CP DAP202K
D606	48T52445F01	CP MA151WA
or	48T63463F01	CP DAP202K

Symbol No.	Part No.	Description
D607	48T52445F01	CP MA151WA
or	48T63463F01	CP DAP202K
D608	48T68828F01	CP MA151WA
or	48T63463F01	CP DAP202K
D610	48T58583F01	1SS176
or	48T68828F01	1SS133
D611	48T58583F01	1SS176
or	48T68828F01	1SS133
D613	48T58583F01	1SS176
or	48T58828F01	1SS133
D614	48T51582F01	MA150
D615	48T51582F01	MA150
D616	48T51582F01	MA150
D617	48T51582F01	MA150
D618	48T58583F01	1SS176
or	48T68828F01	1SS133
D619	48T58583F01	1SS176
or	48T68828F01	1SS133
D620	48T58583F01	1SS176
or	48T68828F01	1SS133
D621	48T58583F01	1SS176
or	48T68828F01	1SS133
D622	48T58583F01	1SS176
or	48T68828F01	1SS133
D623	48T52446F01	CP MA151WK
or	48T63462F01	CP DAN202K
D624	48T52446F01	CP MA151WK
or	48T63462F01	CP DAN202K
D625	48T58583F01	1SS176
or	48T68828F01	1SS133
D626	48T58583F01	1SS176
or	48T68828F01	1SS133
D627	48T52446F01	CP MA151WK
or	48T63462F01	CP DAN202K
D628	48T58583F01	1SS176
or	48T68828F01	1SS133
D629	48T58583F01	1SS176
or	48T68828F01	1SS133
D670	48T52446F01	CP MA151WK
or	48T63462F01	CP DAN202K
D801	48C40235G02	10E2
D802	48C40235G02	10E2
D803	48C40235G02	10E2
D805	48C40235G02	10E2
ZD201	48T68697F40	Zener, HZS10EB3
or	48T68699F32	Zener, MTZ10-C

Symbol No.	Part No.	Description
ZD202	48T68697F17	Zener, HZS5.1EB1
or	48T68699F09	Zener, MTZ5.1-A
ZD601	48T68697F37	Zener, HZS9.1EB3
or	48T68699F29	Zener, MTZ9.1-C
ZD602	48T68697F19	Zener, HZS5.1EB3
or	48T68699F11	Zener, MTZ5.1-C
ZD603	48T68697F17	Zener, HZS5.1EB1
or	48T68699F09	Zener, MTZ5.1-A
ZD604	48T83128F06	Zener, HZS6B3L
ZD607	48T68697F17	Zener, HZS5.1EB1
or	48T68699F09	Zener, MTZ5.1-A
ZD608	48T68697F17	Zener, HZS5.1EB1
or	48T68699F09	Zener, MTZ5.1-A
ZD610	48T68697F17	Zener, HZS5.1EB1
or	48T68699F09	Zener, MTZ5.1-A
ZD801	48T68697F38	Zener, HZS10EB1
or	48T68699F30	Zener, MTZ10-A
ZD802	48T68697F36	Zener, HZS9.1EB2
or	48T68699F27	Zener, MTZ9.1-A
DSP001	48T81909F02	Protector, DSP-301N
Coils		
L001	24T50508F18	Inductor, 4.7μH
L003	24T50508F02	Inductor, 0.22μH
L004	24T50508F24	Inductor, 15μH
L801	24T58149F02	Inductor, 1.2mH
L802	25C40894G11	Choke Trans
T001	24T42241U01	Dolby 23mH (WHT)
T002	24T42241U01	Dolby 23mH (WHT)
Volume Controls		
VR201	18T42748F13	Variable 10k ohm
VR202	18T42748F13	Variable 10k ohm
VR301-1 to VR301-5, S419, S801	18T82143F01	Volume, BALANCE, FADER/POWER, PLAY/PROGRAM Switch
Switches		
S602	40T82548F01	Tact SKELAJ (QRB)

Symbol No.	Part No.	Description
Capacitors		
C001	23T43247F02	ELY 0.22μF/50V
C002	23S61523F25	ELY 0.1μF/50V
C003	08S53332F57	CP 0.1μF
C004	23S57007F09	ELY 10μF/16V
C005	08S53332F42	CP 3900pF
C006	08S53332F42	CP 3900pF
C007	08S53332F41	CP 3900pF
C008	08S53332F41	CP 3300pF
C009	08S53332F39	CP 2200pF
C010	08S53332F39	CP 2200pF
C011	08S53332F47	CP 0.01μF
C012	08S53332F47	CP 0.01μF
C013	08S53332F23	CP 100pF
C016	08T61939F25	CER 39pF
C017	08S53332F49	CP 0.015μF
C201	23T00133L28	ELY 2.2μF/50V
C230	23T00133L01	ELY 10μF/16V
C231	23T00133L01	ELY 10μF/16V
C312	23S57422F09	ELY 10μF/16V
C313	08T57851F13	TF. 0.1μF
C314	08T50579F13	TF. 0.1μF
C316	23T00133L30	ELY 4.7μF/50V
C317	23T00133L30	ELY 4.7μF/50V
C318	23T00133L30	ELY 4.7μF/50V
C319	23T00133L30	ELY 4.7μF/50V
C320	23T00133L01	ELY 10μF/16V
C321	23T00133L01	ELY 10μF/16V
C322	23T00133L01	ELY 10μF/16V
C323	23T00133L01	ELY 10μF/16V
C324	23T00133L01	ELY 10μF/16V
C325	23T00133L01	ELY 10μF/16V
C358	08S53332F35	CP 1000pF
C603	08S60102F28	CP 0.047μF
C604	08S53332F51	CP 0.022μF
C605	23T41366F41	ELY (B.P.) 2.2μF/50V
C606	08S53332F47	CP 0.01μF
C607	23S61523F34	ELY 100μF/10V
C608	08S60102F28	CP 0.047μF
C609	08S53332F15	CP 22pF
C610	08S53332F15	CP 22pF
C611	23S61523F34	ELY 100μF/10V
C613	23S61523F12	ELY 10μF/16V
C614	23S61523F29	ELY 1μF/50V
C615	23S61523F12	ELY 10μF/16V
C616	23T41366F42	ELY (B.P.) 3.3μF/50V

Symbol No.	Part No.	Description			
C617	23S61523F28	ELY	0.047μF/50V		
C618	23C44780P20	ELY	100μF/10V		
C619	08S53332F35	CP	1000pF		
C620	08S53332F35	CP	1000pF		
C621	08S53332F35	CP	1000pF		
C622	08S53332F35	CP	1000pF		
C623	08T65480F61	CER	0.01μF		
C625	08S53332F51	CP	0.022μF		
C801	23S57007F09	ELY	10μF/16V		
C802	23S57007F09	ELY	10μF/16V		
C803	23T00134L36	ELY	1000μF/16V		
C804	23T00134L17	ELY	100μF/10V		
C805	23T00134L17	ELY	100μF/10V		
C806	23T00135L33	ELY	2200μF/16V		
C807	23T00134L27	ELY	10μF/16V		
C808	23T00134L27	ELY	10μF/16V		
C809	23T00134L17	ELY	100μF/10V		
C810	08S53332F24	CP	120pF		
C811	08S53332F57	CP	0.1μF		
Resistors					
R001	06S53330F93	CP	47k ohm 1/8W		
R003	06S53330F77	CP	10k ohm 1/8W		
R004	06S53330F89	CP	33k ohm 1/8W		
R005	06S53330F65	CP	3.3k ohm 1/8W		
R006	06S53330F65	CP	3.3k ohm 1/8W		
R007	06S53331F65	CP	100k ohm 1/8W		
R009	06S53330F77	CP	10k ohm 1/8W		
R010	06S53330F77	CP	10k ohm 1/8W		
R011	06S53330F29	CP	100 ohm 1/8W		
R012	06S53331F06	CP	150k ohm 1/8W		
R013	06S53330F21	CP	47 ohm 1/8W		
R015	06S53330F99	CP	82k ohm 1/8W		
R201	06S53330F37	CP	220 ohm 1/8W		
R316	06S53330F61	CP	2.2k ohm 1/8W		
R317	06S53330F61	CP	2.2k ohm 1/8W		
R318	06S53330F29	CP	100 ohm 1/8W		
R319	06S53330F29	CP	100 ohm 1/8W		
R321	06S53330F77	CP	10k ohm 1/8W		
R324	06S53330F61	CP	2.2k ohm 1/8W		
R325	06S53330F61	CP	2.2k ohm 1/8W		
R326	06S53330F61	CP	2.2k ohm 1/8W		
R327	06S53330F61	CP	2.2k ohm 1/8W		
R328	06S53330F95	CP	56k ohm 1/8W		
R329	06S53330F95	CP	56k ohm 1/8W		
R330	06S53330F95	CP	56k ohm 1/8W		

Symbol No.	Part No.	Description			
R331	06S53330F95	CP	56k ohm 1/8W		
R332	06S53330F79	CP	12k ohm 1/8W		
R333	06S53330F79	CP	12k ohm 1/8W		
R334	06S53330F79	CP	12k ohm 1/8W		
R335	06S53330F79	CP	12k ohm 1/8W		
R336	06S53330F65	CP	3.3k ohm 1/8W		
R337	06S53330F65	CP	3.3k ohm 1/8W		
R338	06S53330F65	CP	3.3k ohm 1/8W		
R339	06S53330F65	CP	3.3k ohm 1/8W		
R340	06S53330F37	CP	220 ohm 1/8W		
R340	06S53330F37	CP	220 ohm 1/8W		
R341	06S53330F37	CP	220 ohm 1/8W		
R342	06S53330F37	CP	220 ohm 1/8W		
R343	06S53330F37	CP	220 ohm 1/8W		
R344	06S53330F85	CP	22k ohm 1/8W		
R345	06S53330F85	CP	22k ohm 1/8W		
R346	06S53330F85	CP	22k ohm 1/8W		
R347	06S53330F85	CP	22k ohm 1/8W		
R348	06S53330F37	CP	220 ohm 1/8W		
R349	06S53330F37	CP	220 ohm 1/8W		
R350	06S53330F37	CP	220 ohm 1/8W		
R351	06S53330F37	CP	220 ohm 1/8W		
R352	06S53330F77	CP	10k ohm 1/8W		
R353	06S53330F77	CP	10k ohm 1/8W		
R354	06S53330F77	CP	10k ohm 1/8W		
R355	06S53330F77	CP	10k ohm 1/8W		
R602	06S53330F53	CP	1k ohm 1/8W		
R603	06S53331F26	CP	1M ohm 1/8W		
R604	06S53330F67	CP	3.9k ohm 1/8W		
R605	06S53330F29	CP	100 ohm 1/8W		
R606	06S53330F77	CP	10k ohm 1/8W		
R607	06S53330F65	CP	3.3k ohm 1/8W		
R609	06S53331F02	CP	100k ohm 1/8W		
R610	06S53331F02	CP	100k ohm 1/8W		
R611	06S53330F69	CP	4.7k ohm 1/8W		
R612	06S53330F85	CP	22k ohm 1/8W		
R613	06S53330F77	CP	10k ohm 1/8W		
R616	06S53330F49	CP	680 ohm 1/8W		
R617	06S53330F77	CP	10k ohm 1/8W		
R618	06S53330F77	CP	10k ohm 1/8W		
R619	06S53330F77	CP	10k ohm 1/8W		
R620	06S53330F85	CP	22k ohm 1/8W		
R621	06S53330F85	CP	22k ohm 1/8W		
R622	06S53330F37	CP	220 ohm 1/8W		
R624	06S53330F77	CP	10k ohm 1/8W		

Symbol No.	Part No.	Description		
R630	06S53330F93	CP	47k ohm 1/8W	
R631	06S53330F83	CP	18k ohm 1/8W	
R632	06S53330F77	CP	10k ohm 1/8W	
R633	06S53330F77	CP	10k ohm 1/8W	
R634	06S53330F77	CP	10k ohm 1/8W	
R637	06S53330F93	CP	47k ohm 1/8W	
R638	06S53330F93	CP	47k ohm 1/8W	
R639	06S53330F93	CP	47k ohm 1/8W	
R641	06S53331F02	CP	100k ohm 1/8W	
R642	06S53331F02	CP	100k ohm 1/8W	
R643	06S53331F02	CP	100k ohm 1/8W	
R644	06S53331F02	CP	100k ohm 1/8W	
R645	06S53330F77	CP	10k ohm 1/8W	
R647	06S53330F53	CP	1k ohm 1/8W	
R648	06S53330F65	CP	3.3k ohm 1/8W	
R649	06S53330F77	CP	10k ohm 1/8W	
R650	06S53330F77	CP	10k ohm 1/8W	
R652	06S53330F77	CP	10k ohm 1/8W	
R657	06T70072F51	CP	820 ohm 1/4W	
R658	06S53330F53	CP	1k ohm 1/8W	
R661	06S53330F53	CP	1k ohm 1/8W	
R665	06S53330F93	CP	47k ohm 1/8W	
R801	06S53330F77	CP	10k ohm 1/8W	
R802	06S53330F61	CP	2.2k ohm 1/8W	
R803	06T70072F53	CP	1k ohm 1/4W	
R804	06S53330F61	CP	2.2k ohm 1/8W	
R805	06S53331F10	CP	220k ohm 1/8W	
R806	06S53331F10	CP	220k ohm 1/8W	
R807	06S53330F77	CP	10k ohm 1/8W	
R808	06S53330F77	CP	10k ohm 1/8W	
R811	06S53330F85	CP	22k ohm 1/8W	
R812	06S53330F85	CP	22k ohm 1/8W	
R813	06S53330F87	CP	27k ohm 1/8W	
R814	06S53331F10	CP	220k ohm 1/8W	
Crystal				
X601	48T55073F01	4.5 MHz		
Dolby P.C. Board				
IC				
IC202	51T74055F01	CX20188		

Symbol No.	Part No.	Description		
Transistors				
Q202	48T62967F03	CP DTC124K		
Q203	48T62967F03	CP DTC124K		
Capacitors				
C202	23T43247F10	ELY	22μF/16V	
C203	23T68970F12	ELY	10μF/16V	
C204	23T68970F12	ELY	10μF/16V	
C205	23T43247F15	ELY	100μF/ 6.3V	
C206	08T57705F59	MYL	220pF	
C207	08T57705F59	MYL	2200pF	
C208	08T57705F62	MYL	3900pF	
C209	23S57007F04	ELY	0.47μF/50V	
C210	08T57851F15	TF.	0.15μF	
C211	08T57705F69	MYL	0.015μF	
C212	23S57007F02	ELY	0.22μF/50V	
C213	08T57705F77	MYL	0.068μF	
C214	08T57705F76	MYL	0.056μF	
C215	08T57705F64	MYL	5600pF	
C216	08T57705F67	MYL	0.01μF	
C217	08T57705F67	MYL	0.01μF	
C218	08T57705F64	MYL	5600pF	
C219	08T57705F76	MYL	0.056μF	
C220	08T57705F77	MYL	0.068μF	
C221	23S57707F02	ELY	0.22μF/50V	
C222	08T57705F69	MYL	0.015μF	
C223	08T57851F15	TF.	0.15μF	
C224	23S57007F04	ELY	0.47μF/50V	
C225	08T57705F62	MYL	3900pF	
C226	08T57705F59	MYL	2200pF	
C227	08T57705F59	MYL	2200pF	
C228	23T43247F15	ELY	100μF/ 6.3V	
C229	23T00149L13	ELY	100μF/10V	
Resistors				
R203	06S53330F79	CP	12k ohm 1/8W	
R204	06S53330F75	CP	8.2k ohm 1/8W	
R205	06S53330F29	CP	100 ohm 1/8W	
R206	06S53330F85	CP	22k ohm 1/8W	
R207	06S53330F60	CP	2k ohm 1/8W	
R208	06S53330F83	CP	18k ohm 1/8W	
R209	06S53330F63	CP	2.7k ohm 1/8W	
R210	06S53330F65	CP	3.3k ohm 1/8W	
R211	06S53330F47	CP	560 ohm 1/8W	
R212	06S53331F26	CP	1M ohm 1/8W	

Symbol No.	Part No.	Description		
R213	06S53330F85	CP 22k ohm 1/8W		
R214	06S53330F74	CP 7.5k ohm 1/8W		
R215	06S53330F49	CP 680 ohm 1/8W		
R216	06S53330F76	CP 9.1k ohm 1/8W		
R217	06S53330F49	CP 680 ohm 1/8W		
R218	06S53330F76	CP 9.1k ohm 1/8W		
R219	06S53330F74	CP 7.5k ohm 1/8W		
R220	06S53330F85	CP 22k ohm 1/8W		
R221	06S53330F47	CP 560 ohm 1/8W		
R222	06S53331F26	CP 1M ohm 1/8W		
R223	06S53330F63	CP 2.7k ohm 1/8W		
R224	06S53330F65	CP 3.3k ohm 1/8W		
R225	06S53330F83	CP 18k ohm 1/8W		
R226	06S53330F60	CP 2k ohm 1/8W		
R227	06S53330F85	CP 22k ohm 1/8W		
R228	06S53331F05	CP 130k ohm 1/8W		
Front P.C. Board				
Transistors				
Q401	48T72752F01	CP 2SD1757K		
LED and Lamps				
LD401	48T51833F03	LED, BG4524K (GRN)		
LD402	48T51833F03	LED, BG4524K (GRN)		
LD403	48T51833F03	LED, BG4524K (GRN)		
LD404	48T51833F03	LED, BG4524K (GRN)		
LD405	48T51833F03	LED, BG4524K (GRN)		
LD406	48T51833F03	LED, BG4524K (GRN)		
LD407	48T51833F03	LED, BG4524K (GRN)		
LD408	48T51833F03	LED, BG4524K (GRN)		
LD409	48T51833F03	LED, BG4524K (GRN)		
LD410	48T51833F03	LED, BG4524K (GRN)		
LD411	48T51833F03	LED, BG4524K (GRN)		
LD412	48T51833F03	LED, BG4524K (GRN)		
LD413	48T52953F01	LED, BR3432S (RED)		
LD414	48T52953F01	LED, BR3432S (RED)		
PL401	65T95083F01	Pilot 6.7V-85mA		
PL402	65T95083F01	Pilot 6.7V-85mA		
PL403	65T95274F02	Pilot 6V-70mA		
PL404	65T95274F02	Pilot 6V-70mA		
PL405	65T80297F05	Pilot 6V-65mA		

Symbol No.	Part No.	Description		
Volume Controls				
VR302		Slide		
VR303	18T82527F01	100k ohm x 2		
LD415		(GRN)		
LD416		(TREBLE/BASS)		
Switches				
S401	40T70366F01	Tact KHL10906 (EJECT)		
S402	40T70366F01	Tact KHL10906 (FF)		
S403	40T70366F01	Tact KHL10906 (REW)		
S404	40T70366F01	Tact KHL10906 (ME)		
S405	40T70366F01	Tact KHL10906 (DN)		
S406	40T70366F01	Tact KHL10906 (UP)		
S407	40T70366F01	Tact KHL10906 (SEEK)		
S408	40T70366F01	Tact KHL10906 (PAUSE)		
S409	40T70366F01	Tact KHL10906 (M6)		
S410	40T70366F01	Tact KHL10906 (M5)		
S411	40T70366F01	Tact KHL10906 (M4)		
S412	40T70366F01	Tact KHL10906 (M3)		
S413	40T70366F01	Tact KHL10906 (M2)		
S414	40T70366F01	Tact KHL10906 (M1)		
S415	40T70366F01	Tact KHL10906 (BAND)		
S416	40T70366F01	Tact KHL10906 (ST)		
S417	40T70366F01	Tact KHL10906 (DX)		
S418	40T70366F01	Tact KHL10906 (LOUD/R.MON)		
S419	40T67523F07	Tact KHQ11908 (ORG)		
LD419		[DIMMER]		
Resistors				
R401	06T70072F17	CP 33 ohm 1/4W		
R402	06T70072F19	CP 39 ohm 1/4W		
R403	06T70072F25	CP 68 ohm 1/4W		
R404	06T70072F25	CP 68 ohm 1/4W		
R405	06T70072F47	CP 560 ohm 1/4W		
R406	06T70072F47	CP 560 ohm 1/4W		
R407	06T70072F47	CP 560 ohm 1/4W		
R408	06T70072F47	CP 560 ohm 1/4W		
R409	06T70072F47	CP 560 ohm 1/4W		
R410	06T70072F49	CP 680 ohm 1/4W		
R411	06T70072F51	CP 820 ohm 1/4W		
R412	06T70072F45	CP 470 ohm 1/4W		

Symbol No.	Part No.	Description		
		Tone P.C. Board		
IC's				
IC301	51T69242F01	NJM5532M		
Capacitors				
C301	08T52448F03	PP 390pF		
C302	08T57705F78	MYL 0.082μF		
C303	08T52448F03	PP 390pF		
C304	08T57705F78	MYL 0.082μF		
C305	08T52448F01	PP 330pF		
C306	08T57705F81	MYL 0.15μF		
C307	08T52448F01	PP 330pF		
C308	08T57705F81	MYL 0.15μF		
C309	23T00133L01	ELY 10μF/16V		
C310	23T00133L01	ELY 10μF/16V		
C311	23T00133L01	ELY 10μF/16V		
C327	08T72783F14	CP 18pF		
C328	08T72783F14	CP 18pF		
Resistors				
R301	06S53330F71	CP 5.6k ohm 1/8W		
R302	06S53330F71	CP 5.6k ohm 1/8W		
R303	06S53330F71	CP 5.6k ohm 1/8W		
R304	06S53330F71	CP 5.6k ohm 1/8W		
R305	06S53330F71	CP 5.6k ohm 1/8W		
R306	06S53330F71	CP 5.6k ohm 1/8W		
R307	06S53330F71	CP 5.6k ohm 1/8W		
R308	06S53330F71	CP 5.6k ohm 1/8W		
R309	06S53330F91	CP 39k ohm 1/8W		
R310	06S53330F91	CP 39k ohm 1/8W		
R311	06S53331F26	CP 1M ohm 1/8W		
R312	06S53331F26	CP 1M ohm 1/8W		
R314	06S53330F05	CP 10 ohm 1/8W		
R315	06S53330F05	CP 10 ohm 1/8W		
		GZ Control P.C. Board		
IC's				
IC701	51T71799F01	71799F01		
IC702	51T71802F01	71802F01		

Symbol No.	Part No.	Description		
Transistors				
Q701	48T52547F02	2SB793A		
Q702	48T62967F03	CP DTC124K		
Diodes				
D701	48T52445F01	CP MA151WA		
D702	48T52446F01	CP MA151WK		
ZD701	48T68697F54	Zener HZS16EB1		
ZD702	48T62934F29	Zener CP RD6.8MB3		
Capacitors				
C701	23T82482F02	ELY 100μF/16V		
C702	23S61523F12	ELY 10μF/16V		
C703	08T50579F09	TF. 0.047μF		
C704	23S61523F15	ELY 47μF/16V		
C705	08S53332F53	CP 0.033μF		
C706	08S53332F47	CP 0.01μF		
C707	08S53332F57	CP 0.1μF		
C708	08S53332F35	CP 1000pF		
Resistors				
R701	06S81094F09	MF 4.7 ohm 1/2W		
R702	06S81094F65	MF 1k ohm 1/2W		
R703	06S53330F77	CP 10k ohm 1/8W		
R704	06S81094F05	MF 3.3 ohm 1/2W		
R706	06S53330F77	CP 10k ohm 1/8W		
R708	06S64995F94	CP 51k ohm 1/16W		
R709	06S53330F85	CP 22k ohm 1/8W		
R710	06S53330F71	CP 5.6k ohm 1/8W		
R711	06S53330F29	CP 100 ohm 1/8W		
R712	06S53331F12	CP 270k ohm 1/8W		
R713	06S53331F31	CP 2.7k ohm 1/8W		
		Reverse P.C. Board		
PT701	51T63433F01	Sensor, Photo		
PT702	51T63433F01	Sensor, Photo		

Symbol No.	Part No.	Description
		Regulator P.C. Board
IC		
IC401	51T40391U01	TC4013P
Transistors		
Q402	48S40627U01	2SD636
Q403	48T56031F01	2SD1266
Diodes		
ZD401	48T83128F28	Zener HZS11A1L
ZD402	48T83128F06	Zener HZS6B3L
Capacitors		
C401	23S57422F05	ELY 1μF/50V
C402	23S61523F29	ELY 1μF/50V
C403	23S61523F09	ELY 22μF/10V
C404	08S53332F43	CP 4700pF
Resistors		
R414	06S53330F45	CP., 470 ohm 1/8W
R415	06S53330F49	CP., 680 ohm 1/8W
R416	06S53330F77	CP., 1k ohm 1/8W
R417	06S53330F77	CP., 1k ohm 1/8W
R418	06S53330F77	CP., 1k ohm 1/8W
R419	06T93535F21	MF., 15 ohm 1/2W
R420	06S53331F10	CP., 220k ohm 1/8W
		Miscellaneous
LCD401	65T94213F01	LCD, Display LU1389
BA601	60T83249F01	Battery Lit, BR2032
E801	01T94806F01	Assy., Conn. QRB (B) 28P
M701	01V71800F20	Assy., Motor
M702	01V83500F82	Assy., RF Motor
HD701	88T74470F01	Head
S701	40T52216F01	Switch, Micro (Pack In)
S702	40T60329F02	Switch, Leaf (Eject, Pack In)
S704	40T63432F01	Switch, Slide (For/Rev.)
S705	40T71025F03	Switch, Detector (Metal Position)

Symbol No.	Part No.	Description
S706	40T71025F03	Switch, Detector (Metal Position)
SD701	01A63213F01	Assy., Program Solenoid
SD702	01A63215F01	Assy., Eject Solenoid
SD703	01A63212F01	Assy., Play Solenoid
SD704	01A63214F01	Assy., RF Solenoid
ZB101	48T40150U58	Diode, Zener HZ11-C

Cabinet Assembly Parts List (7385M/LCODE02)

Note : The parts without part numbers are not supplied.

	Symbol No.	IN-dex	Part No.	Description		
●	1	4-C	13D94825F09	Assy., Nose Piece		
■	1	4-C	13D94825F07	Assy., Nose Piece		
	2	1-C	15D82167F08	Cover, Top		
	7	4-B	36B82169F01	Knob, Slide A		
	8	4-B	36A82171F01	Knob, Control Front		
	9	4-B	36A82170F01	Knob, Control Back		
	10		03S44205G34	Scerw, Pan(M2.6x5)		
	11	5-B	07C10065W01	Bracket,Handol Assy.,		
	12		03S44205G07	Screw, Pan(M2.6x5)		
	13		03S44205G48	Screw, Pan(M2.6x5)		
	14	1-H	03S44205G33	Screw, Pan(M2.6x5)		
	17	3-D	01T84793F01	Flat, Cable 18P		
	21	2-D	01V83200F59	Cassette Deck, GZ75E230		
	25	3-F	30T84798F02	Shield wire		
	27		03S44205G30	Screw, Pan(M2.6x4)		
■	31	3-F	77C94506F01	FM Tuner MB1L4020 (FE001)		
●	31	3-F	77C82280F01	FM Tuner MB1E4020 (FE001)		
	32	3-E	77T68552F01	MW/LW Tuner TFAD3L113A(FE101)		
	34	2-A	01V94700F12	Assy., Front P.C. Board		
	35	3-B	26A94852F02	Reflector, LCD		
	36	3-B	15B94850F01	Case, LCD		
	39	2-B	75S62361F20	Cushion, Rubber		
	41	2-B	30T82417F01	Flat, Cable 12P		
	42	4-B	30T82524F01	Wire, Parallel 15P		
	43	3-B	30T82524F04	Wire, Parallel 19P		
	44	3-B	30T90988F04	Wire, Parallel 14P		
	46	4-C	04A43020G03	Washer, Flat(M9.2)		
	49	5-C	46A90021F01	Stud, Pin		
	52	2-D	04A41345P04	Washer, Lock(M2.6)		
	54	2-D	41A84062F01	Spring, Lever		
	56	3-A	14S81482F20	Insulator, Cover		
	57	5-C	46A94999F01	Stud Ring		
	61	2-B	07A84744F01	Bracket Shield, (VK)		
	62	6-D	54S60912F16	Label Round STD		
	63	2-B	02S40000G20	Nut Hex (M9)		
	64	4-F	41A84825F01	Spring, Bracket Switch		
	65	3-B	04S40070G28	Washer, Flat(M9.1)		
	66	3-D	14S81481F94	Insulator, Cover		
	67	2-D	01T84387F01	Assy., Shield Wire		
	72	4-E	09T84840F01	Lug, Style 18mm		

Symbol No.	IN-dex	Part No.	Description		
74	3-B	14S81482F32	Insulator Cover		
76		03S44205G41	Screw, Pan(M2.6x4)		
77	2-A	14S94461F25	Insulator, Cover		
78	3-B	61A94851F01	Lens, LCD		
79	3-A	07B10298W01	Bracket, Shield		
80	3-A	61A94420F02	Filter, LCD		
81		14S81481F63	Insulator, Cover		
83	1-C	29C41045P11	Lug, Wrap Around		
84	1-B	75S92415F07	Cushion, Rubber		

Note: ● : 7385M CODE02 model only ■ : 7385M CODE02 model only Others : Common

Exploded View (Cabinet) (7385M/LCODE02)

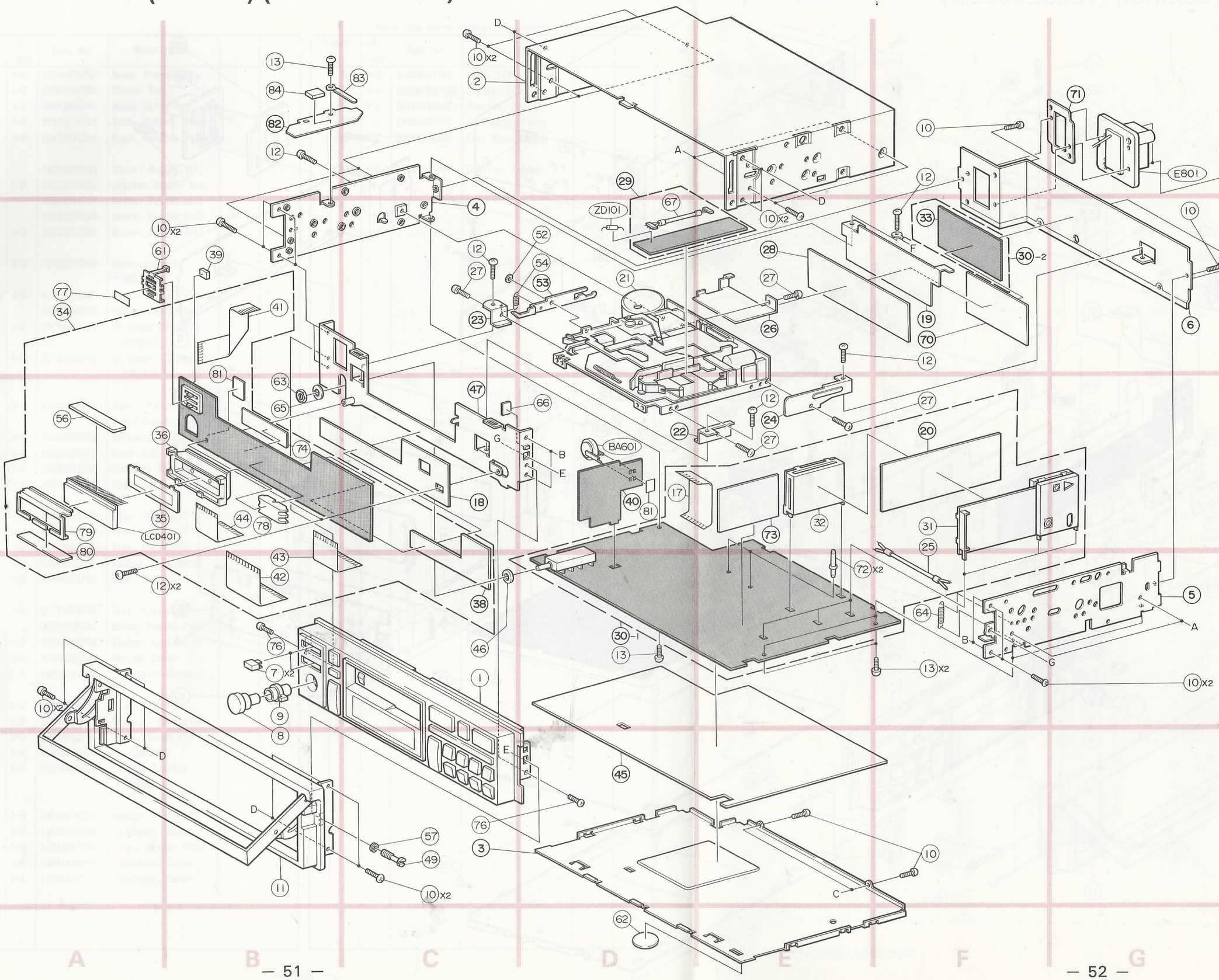

7385M/L/E
CODE 02

Exploded View (Cabinet) (7385ECODE02)

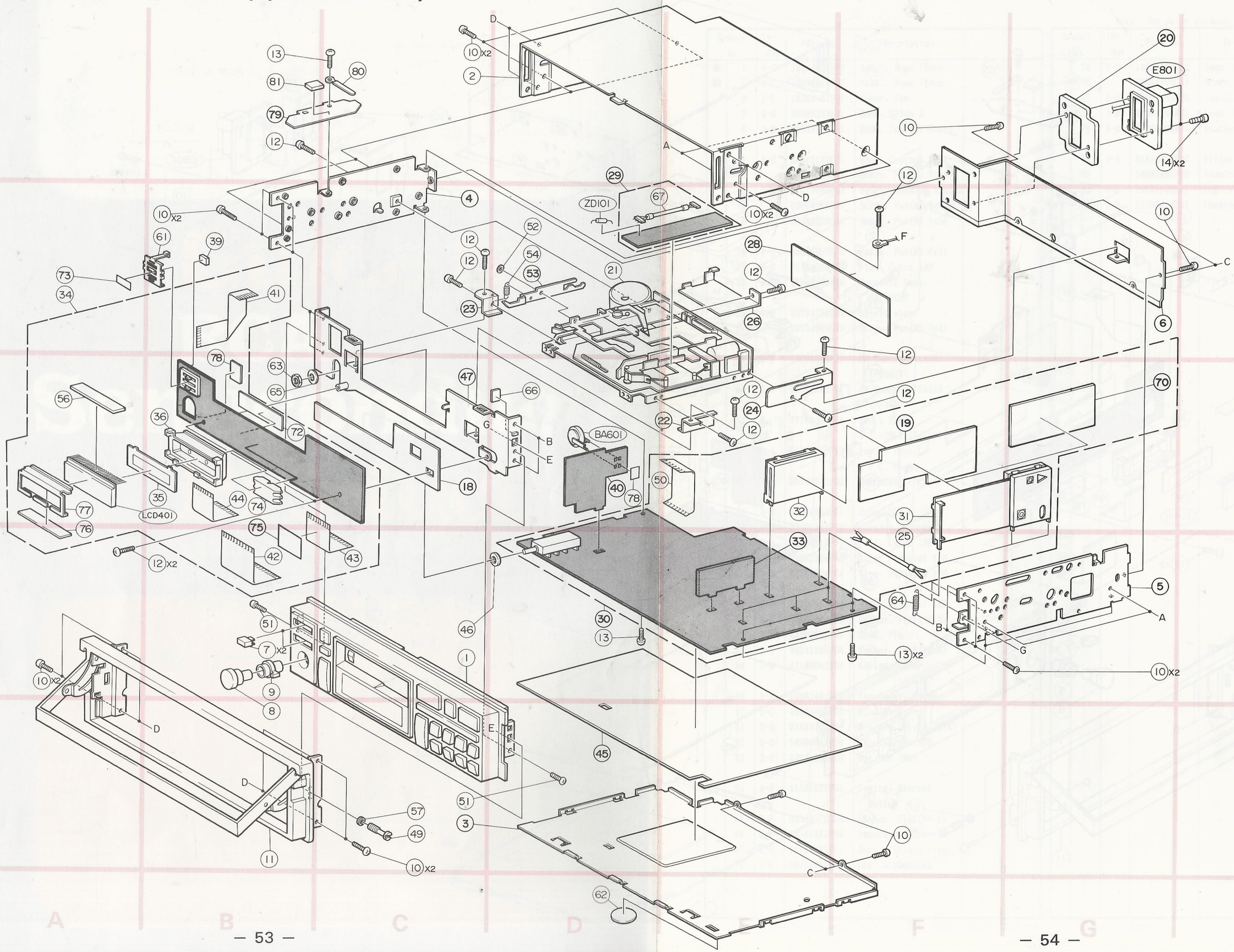

Cabinet Assembly Parts List (7385ECODE02)

Note : The parts without part numbers are not supplied.

Symbol No.	IN-dex	Part No.	Description		
1	4-C	13D94825F05	Nose, Piece Assy.		
2	1-C	15D82167F08	Cover, Top		
7	4-B	36B82169F01	Knob, Slide A		
8	5-B	36A82170F01	Knob, Control Front		
9	4-B	36A82171F01	Knob, Control Back		
10		03S44205G34	Screw, Pan(M2.6x5)		
11	5-B	07C10065W01	Bracket,Handol Assy.,		
12		03S44205G07	Screw, Pan(M2.6x5)		
13		03S44205G48	Scerw, Pan(M2.6x5)		
14	1-G	03S44205G33	Scerw, Pan(M2.6x8)		
21	2-D	01V83200F59	Cassette Deck, GZ75E230		
25	4-F	01T83932F01	Assy., Shield Wire		
27		03S44205G30	Screw, Pan(M2.6x4)		
31	3-F	77C94505F01	FM Tuner MB1G402A (FE001)		
32	3-E	77T82352F01	AM Tuner TFAG2M112A (FE101)		
34	2-A	01V94600F76	Assy., Front P.C.Board		
35	3-B	26A94852F02	Reflector, LCD		
36	3-B	15B94850F01	Case, LCD		
39	2-B	75S62361F20	Cushion, Rubber		
41	2-B	30T82417F01	Flat, Cable 12P		
42	4-B	30T90988F03	Flat, Cable 18P		
43	4-C	01T67838F05	Flat, Cable 16P		
44	3-B	30T90988F02	Flat, Cable 14P		
46	4-C	04A43020G03	Washer, Flat(M9.2)		
49	5-C	46A90021F01	Stud, Pin		
50	3-D	01T73956F02	Flat, Cable 18P		
51		03S44205G41	Screw, Pan(M2.6x4)		
52	2-D	04A41345P04	Washer, Lock(M2.6)		
54	2-D	41A84062F01	Spring, Lever		
56	3-A	14S81482F20	Insulator, Cover		
57	5-C	46A94999F01	Stud, Ring		
61	2-B	07A84744F01	Bracket, Shield(VK)		
62	6-D	54S60912F16	Label, Round STD		
63	3-B	02S40000G20	Nut, Hex(M9)		
64	4-F	41A84825F01	Spring, Bracket Switch		
65	3-B	04S40070G28	Washer, Flat(9.1)		
66	3-D	14S81481F94	Insulator, Cover		
67	2-D	01T84387F01	Assy., Shield Wire		
72	3-B	14S81482F32	Insulator, Cover		
73	2-A	14S94461F25	Insulator, Cover		
74	3-B	61A94851F01	Lens, LCD		
76	4-A	61A94420F02	Filter, LCD		
77	3-A	07B10298W01	Bracket, Shield		
78		14S81481F63	Insulator, Cover		
80	1-C	29C41045P11	Lug, Wrap Around		
81	1-B	75S92415F07	Cushion, Rubber		

Packing Method View

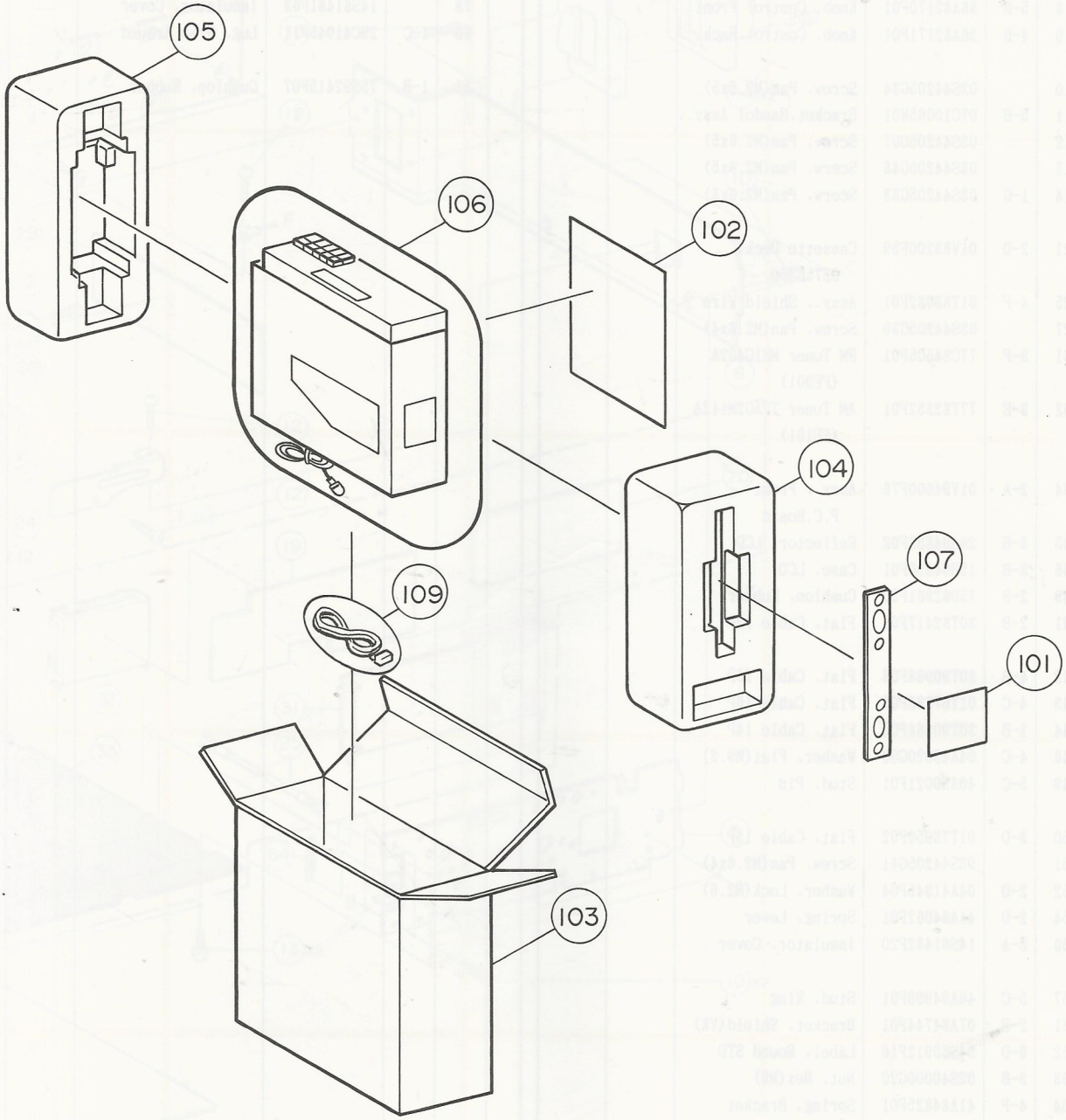

Packing Assembly Parts List

(7385M/LCODE02)

	Symbol No.	Part No.	Description		
	101	01V13100W01	Assy., Kit Installation		
	101-1	02B47353F01	Nut Hex(M5)		
	101-2	03S40012G66	Screw, Tapping(M5x20)		
	101-3	03B44963F03	Bolt Hex W/Washer(M5x10)		
	101-4	46A42363F01	Stud, Bolt		
	101-5	03A40155F01	Bolt, Hex(M5x8)		
	101-7	03A84814F04	Screw, Bind(M2.6x18)		
	101-8	43A58272F04	Spacer		
●	102	68P81707F43	Owners, Manual 7385M		
■	102	68P81707F44	Owners, Manual 7385L		
●	103	56S90024F94	Carton, Packing (Individual)		
■	103	56S90024F92	Carton, Packing (Individual)		
	104	56D82187F01	Tray, Packing(L)		
	105	56D82187F02	Tray, Packing(R)		
	106	56B40990T36	Sack, Polythylene		
	107	07B64552F01	Bracket, Strap Receiver		
●	108	01V94700F28	Assy., Case Mother		
■	108	01V94700F34	Assy., Case Mother		
	108-1	15D94518F01	Case, Mother		
●	108-2	01T94805F03	Assy., Conn. QRB(A) 28P[E802]		
■	108-2	01T94805F02	Assy., Conn. QRB(A) 28P[E802]		
	108-5	03S44205G07	Screw, Pan(M2.6x5)		
	108-6	03S44205G61	Screw, Pan(M2.6x10)		
	109	01T96095F01	Assy., Connector 4P		

(7385ECODE02)

Symbol No.	Part No.	Description		
101	01V13100W01	Assy., Kit Installation		
101-1	02B47353F01	Nut, Hex(M5)		
101-2	03S40012G66	Screw, Tapping(M5x20)		
101-3	03B44963F03	Bolt Hex W/Washer(M5x10)		
101-4	46A42363F01	Stud, Bolt		
101-5	03A40155F01	Bolt, Hex(M5x8)		
101-7	03A84814F04	Screw, Bind(M2.6x18)		
101-8	43A58272F04	Spacer		
102	68P81707F57	Owners, Manual 7385E		
103	56S90024F89	Carton, Packing (Individual)		
104	56D82187F01	Tray, Packing(L)		
105	56D82187F02	Tray, Packing(R)		
106	56B40990T36	Sack, Polythylene		
107	07B64552F01	Bracket, Strap Receiver		
108	01V94600F84	Assy., Case Mother		
108-1	15D94518F01	Case, Mother		
108-2	01T94805F01	Assy., Connector QRB(A) 28P[E802]		
108-5	03S44205G07	Screw, Pan(M2.6x5)		
108-6	03S44205G61	Screw, Pan(M2.6x10)		
109	01T96095F01	Assy., Connector 4P		

Note: ● : 7385M CODE02 model only ■ : 7385L CODE02 model only Others : Common