S8-1 SONY MODEL 6R-12

Specifications

Circuit:	8 Transistor Superheterodyne
Frequency Coverage:	MW 530~1,605 Kc (566~187 m)
	SW 3.9~12 Mc (76.9~25 m)
Intermediate Frequency:	455 Kc
Antenna System:	MW Built-in Ferrite Bar Antenna
	SW Built-in Ferrite Bar Antenna, Telescopic Antenna
Maximum Sensitivity:	MW 35.5μV/m
(at 10 mW output)	SW 35.5μV/m
Selectivity:	MW 30 dB at 10 Kc off resonance, at 1,400 Kc
Power Output:	280 mW (at 10% distortion)
	470 mW (maximum)
Current Drain:	15 mA at zero signal
	180 mA at 470 mW output
Speaker:	$2^{3}/_{4}$" (70 mm) PM dynamic, 8Ω
Power Source:	Three Size "C" Flashlight Batteries, 4.5V in total
Dimensions:	$7^{1}/_{16}$ (W) × 4 (H) × $1^{13}/_{16}$ (D)"
	(180 × 102 × 46 mm)
Weight:	1 lb. 2 oz. with batteries

Removal of Rear Cabinet

Remove the three Screws marked with ○ shown in Fig. 1, and remove the Rear Cabinet.

Removal of Printed Circuit Board

(1) Remove the three Bosses marked with △ and two Screws marked with □ shown in Fig. 2.
(2) Unsolder the White Lead at the Telescopic Antenna Terminal.
(3) Remove the Earphone and Ext. Power Jacks.
(4) Unsolder the two Leads (a White and a Black) at the Terminals of Speaker.
(5) Unsolder the Red Lead at the Battery Positive Contact Plate and the Black Lead at the Battery Negative Contact Spring.
(6) Unsolder the two Leads (a Yellow and a Black) at the Tone Control Switch.

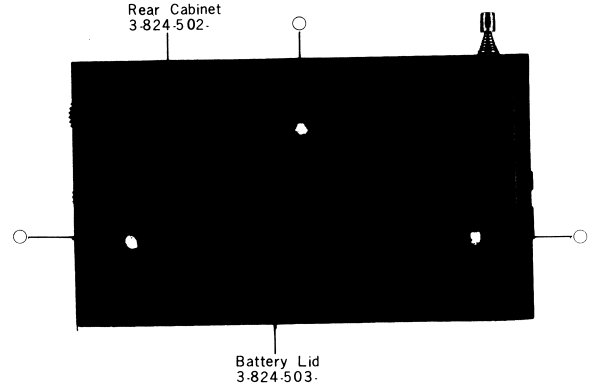

(Fig. 1)

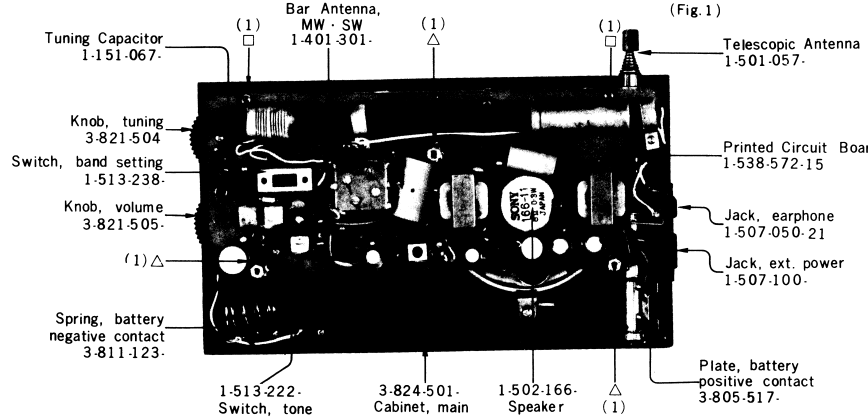

(Fig. 2)

S8-1 SONY MODEL 6R-12

Mounting Diagram

—Conductor Side—

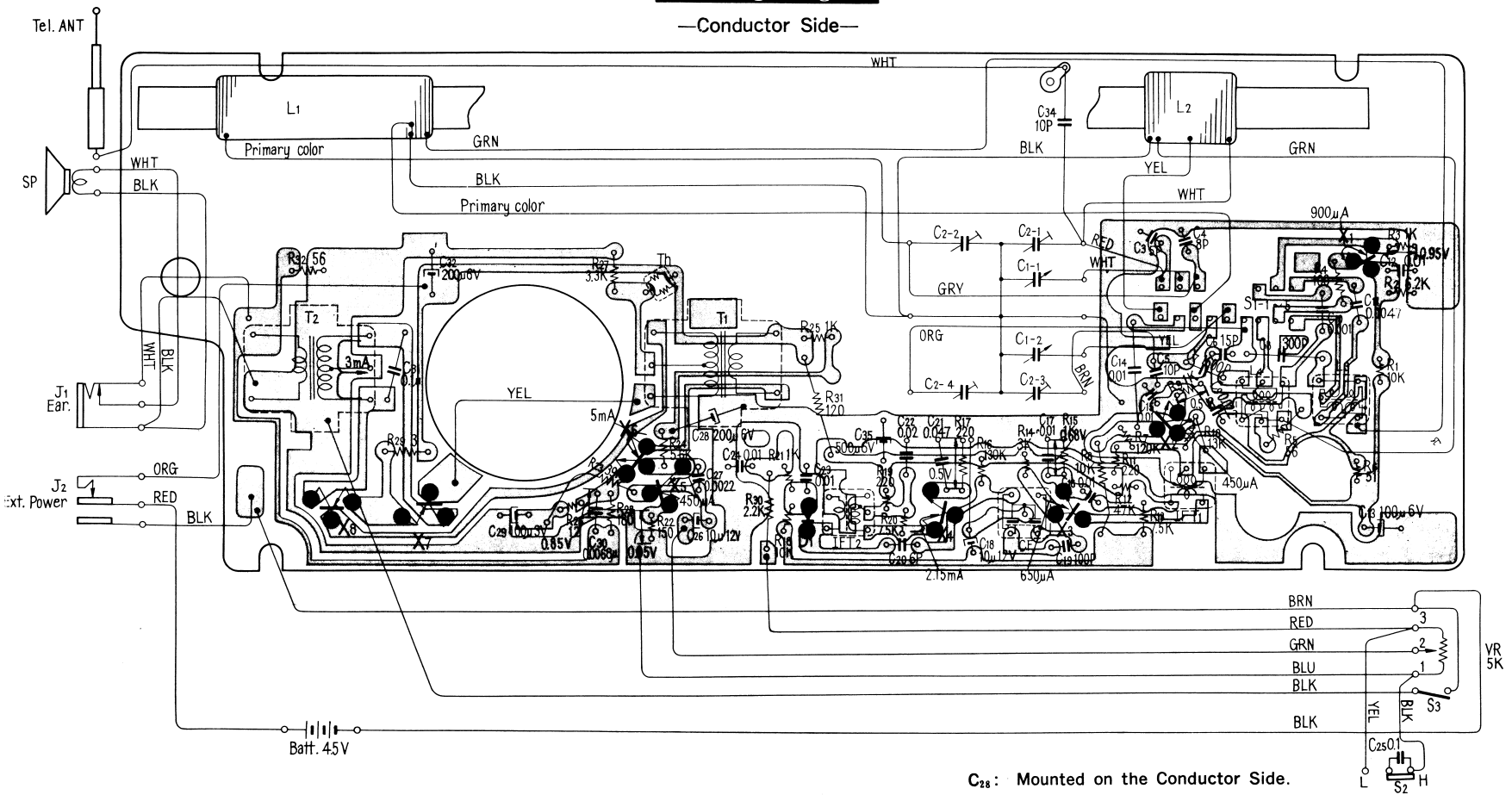

C_{28}: Mounted on the Conductor Side.

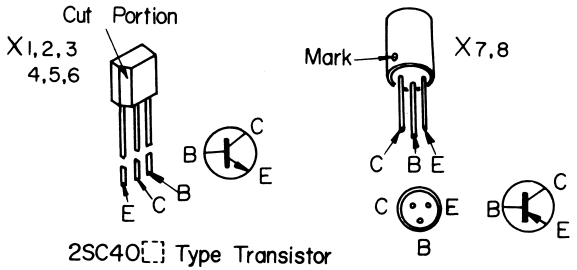

Block Diagram

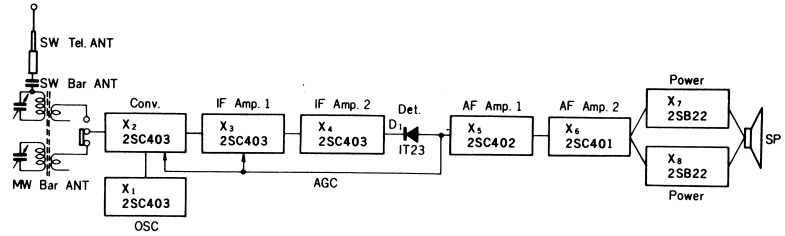

Frequency Coverage and Tracking Adjustment

Adj. Item	SSG (Standard Signal Generator) Coupling	SSG Freq.	Receiver Dial Setting	Connect VTVM	Adjust	Remarks
MW Frequency Coverage	Loop Antenna	520 kc (1000 c/s 30% AM)	Fully Left	Across 8Ω Load Resistor	MW OSC Coil (L_3)	Adjust for maximum meter reading. Volume: Max. Tone: High Tel. ANT: Fully contracted Power Supply: DC 4.5V
		1,680 kc (〃)	Fully Right		MW OSC Trimmer (C_{2-4})	
MW Tracking	—ditto—	620 kc (〃)	Tune to 620 kc signal	—ditto—	MW ANT Coil (L_1)	—ditto—
		1,400 kc (〃)	Tune to 1,400kc signal		MW ANT Trimmer (C_{2-2})	
SW Frequency Coverage	—ditto—	3.8 Mc (〃)	Fully Left	—ditto—	SW OSC Coil (L_4)	—ditto—
		12.6 Mc (〃)	Fully Right		SW OSC Trimmer (C_{2-3})	
SW Tracking	—ditto—	3.8 Mc (〃)	Tune to 3.8 Mc signal	—ditto—	SW ANT Coil (L_2)	—ditto—
		12.6 Mc (〃)	Tune to 12.6 Mc signal		SW ANT Trimmer (C_{2-1})	

Dial Cord Stringing

1st Step

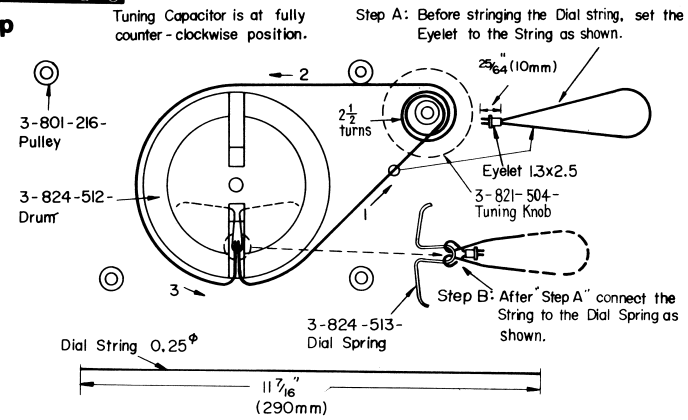

2nd Step

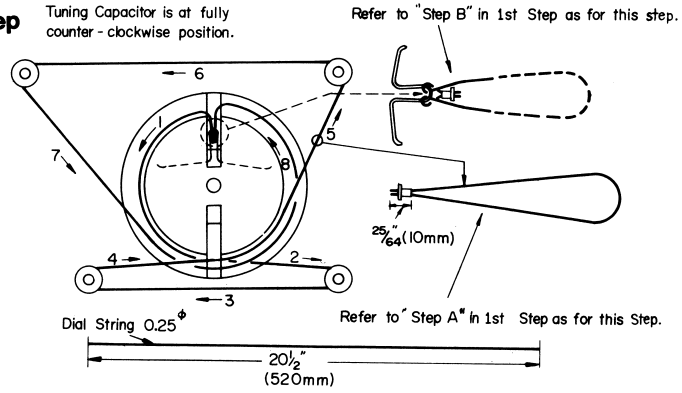

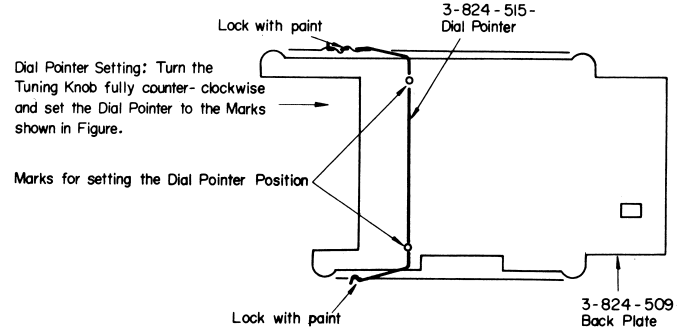

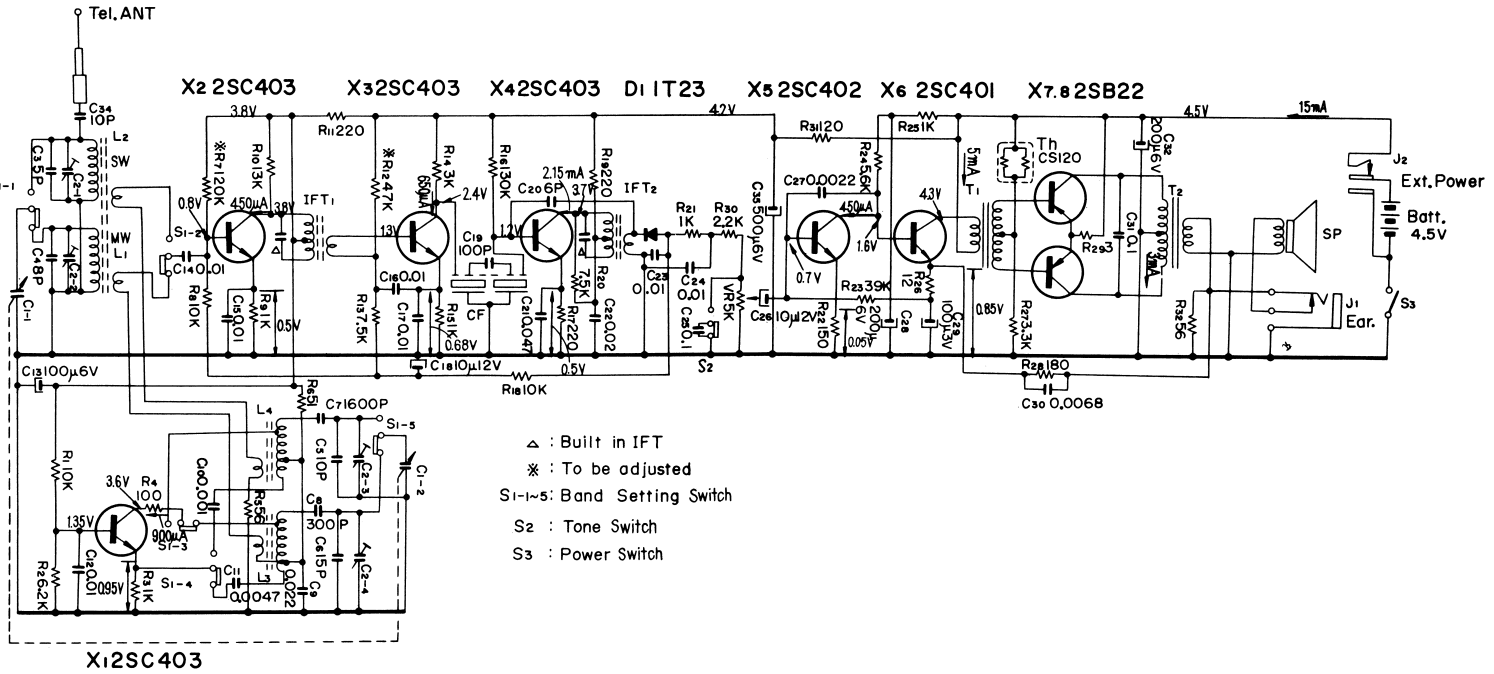

Mounting Diagram
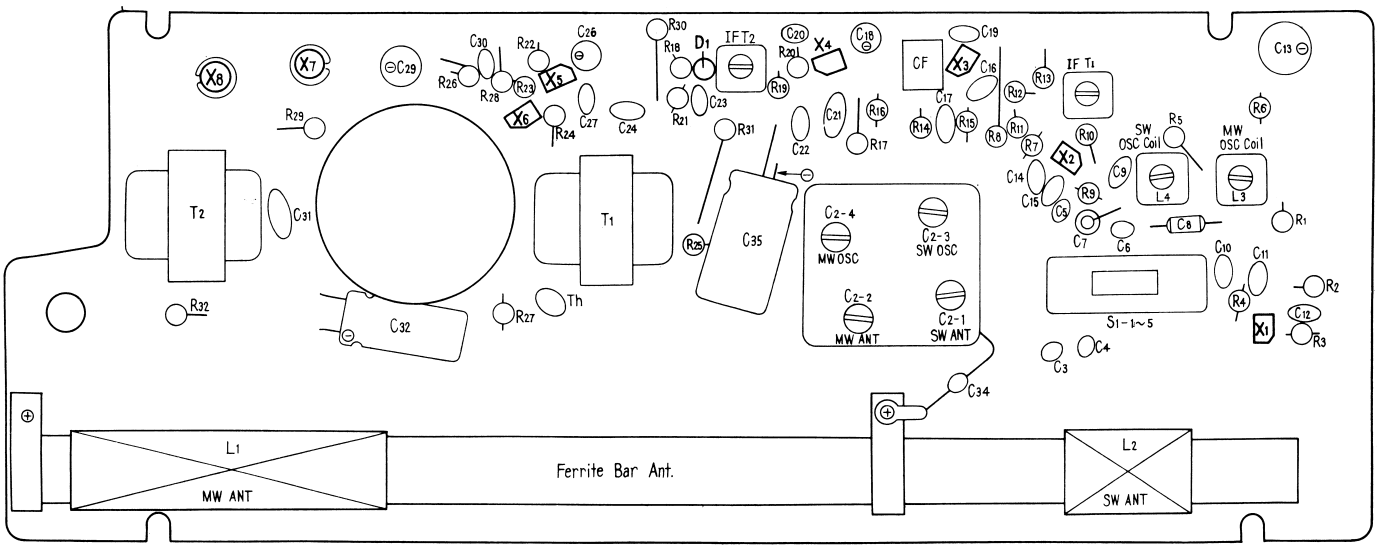
—Components Side—