Clarion

Manufacturer
Clarion Co., Ltd.

Export Division
Clarion Shoji Co., Ltd.
3, Kojimachi 5-chome, Chiyoda-ku, Tokyo, 102 Japan
Tel: 03-265-2931
Telex: J22908, J22152, J25550 CLARISHO

Service Manual

Closer Relations through
"Clarion Service Manual"

Overseas Sales Branch Offices
Clarion Corporation of America 5500 Rosecrans Ave., Lawndale, Calif., 90260 U.S.A. Tel: 213-973-1100 Telex: CLARIONLSA 66-4447
Clarion Shoji (EUROPA) G.m.b.H. Rudolf-Diesel-Strasse 2, 6236 Eschborn 2, West Germany Tel: 06173-61041-42 Telex: 415414
Clarion (HONG KONG) Co., Ltd. 526, Ocean Centre, Canton Road, Tsimshatsui, Kowloon, Hong Kong Tel: 3-690528 Telex: HX64293 CLAHK
Clarion Canada Inc. 1401 Meyerside Dr. Mississauga, Ontario L5T IG8, Canada Tel: 416-678-1367 Telex: 216968573 CLARION MSGA
Clarion Shoji (U.K.) Ltd. 4-6, Faraday Road, Dorcan Industrial Estate, Dorcan, Swindon, Wiltshire. SN3.5HQ United Kingdom Tel: (0793) 24081 Telex: 44689

Model 3500R, 3550R

Model 3500R

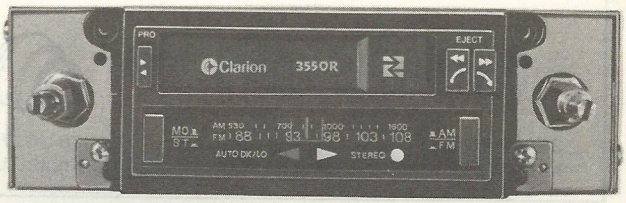

Model 3550R

■SPECIFICATIONS:

(The specifications for this product were determined and are presented in accordance with specification standards established by the Ad Hoc Committee of Car Stereo Manufacturers.)

General

Power supply voltage:		DC 14.4V (10.8 to 15.6V allowable)
Current consumption:		Less than 3A
Load impedance:		4ohms. (4 to 8ohms. allowable)
Weight:		1.1kg (2.43 lbs)
Dimensions:		
(3500R)	Chassis.	180x50x115mm
	(WxHxD)	(7⅛x2x4½ inch)
	Nose.	105x44x32mm
	(WxHxD)	(4⅛x1¾x1¼ inch)
(3550R)	Chassis.	160x48x115mm
	(WxHxD)	(6¼x1⅞x4½ inch)
	Nose.	91x39x25mm
	(WxHxD)	(3⅝x1 9/16x1 inch)
Shaft spacing:		130 to 148mm
(3500R)		(5⅛ to 5 13/16 inch)
(3550R)		130mm(5⅛ inch)

FM Section

Frequency range:	88MHz to 108MHz
Usable sensitivity:	13dBf (1.2μV./75ohms)
50dB Quieting sensitivity:	18dBf (2.2μV./75ohms)
Capture ratio:	2dB
Alternate channel selectivity:	65dB
Stereo separation:	35dB at 1kHz
Frequency response:	30Hz to 15,000Hz, ±5dB

AM Section

Frequency range:	530kHz to 1,610kHz
Usable sensitivity. (20dB S/N):	20μV
Selectivity. (at ±10kHz):	30dB

Tape Section

Tape speed:	4.75cm/s. (1-7/8 ips)
Wow & Flutter:	0.25% W.R.M.S.
Stereo separation:	40dB at 1kHz
Signal/Noise ratio:	50dB
Frequency response:	40Hz to 12,000Hz, ±3dB
Fast forward time. (C-60)	100sec.
Rewind time. (C-60):	100sec.

Audio Section

Max. power output:	6W per channel.
Rated power output:	5W per channel at 1kHz, 10% THD.
Continuous average power output:	3.2W per channel into 4ohms, 50Hz to 15,000Hz, at 5% THD.

Printed in Japan 298-2738-00

■COMPONENT VIW:

● **PE-583A-01 (3500R)**

	Main unit	1
300-4976-00	Mounting bracket	1
383-0168-00	Gasket	1
922-1106-00	Parts bag	1

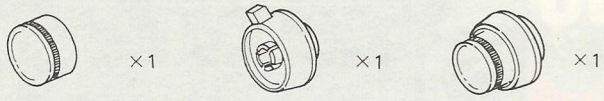

380-4165-01 Knob (VOL.) | 380-4166-01 Knob (TON.) | 381-0171-01 Knob (TUN.)

921-6468-01	Parts bag	1
922-1107-00	Parts bag	1

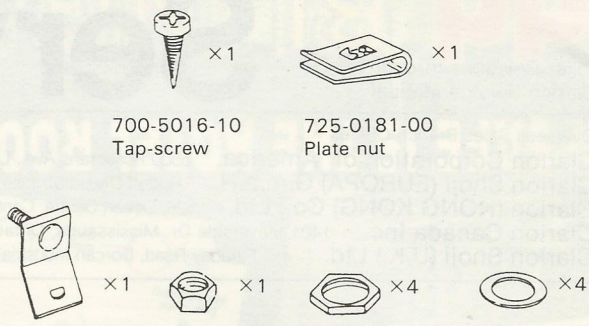

700-5016-10 Tap-screw | 725-0181-00 Plate nut | 716-0326-01 MTG bolt | 723-5000-21 Hex. nut | 722-0020-00 Hex. nut | 745-0524-00 Flat washer

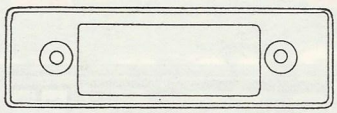

370-3440-00 Escutcheon

● **PE-584A-01 (3550R)**

	Main unit	1
300-4976-00	Mounting bracket	1
921-6468-01	Parts bag	1

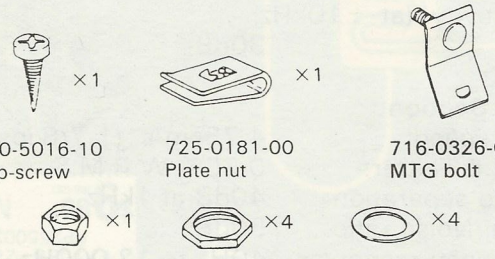

700-5016-10 Tap-screw | 725-0181-00 Plate nut | 716-0326-01 MTG bolt | 723-5000-21 Hex. nut | 722-0020-00 Hex. nut | 745-0524-00 Flat washer

922-1109-00	Parts bag	1
922-1108-00	Parts bag	1

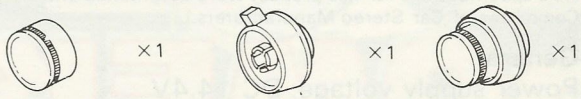

380-4165-00 Knob (VOL.) | 380-4166-00 Knob (TON.) | 381-0171-00 Knob (TUN.)

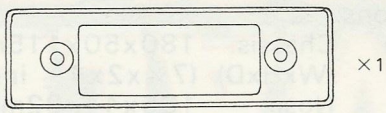

370-3438-00 Escutcheon

■FEATURES:

- AM/FM-MPX radio with auto reverse stereo cassette player (with F.F. & REW. lock).
- ST/MO select switch.
- Auto DX/Lo circuit built in.

■DIAL CORD STRINGING:

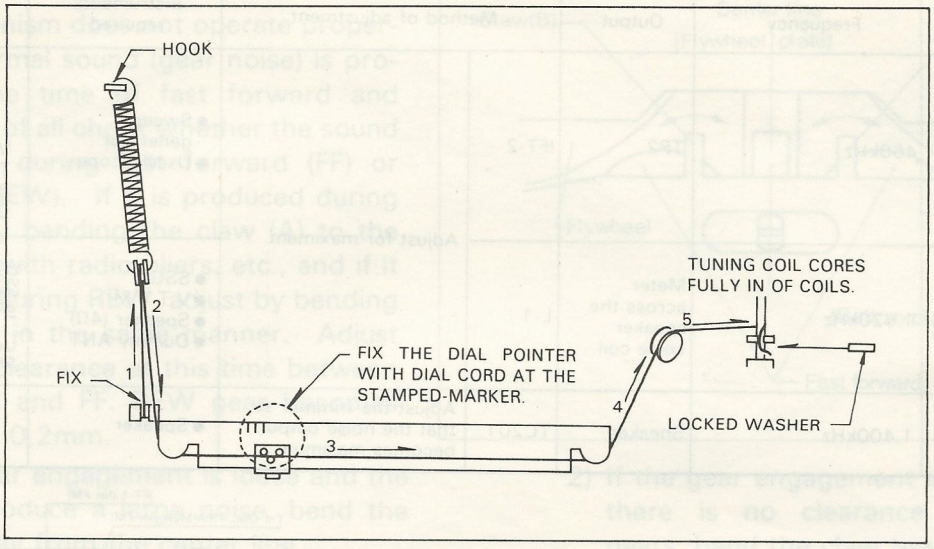

■DIMENSIONS:

Model 3500R

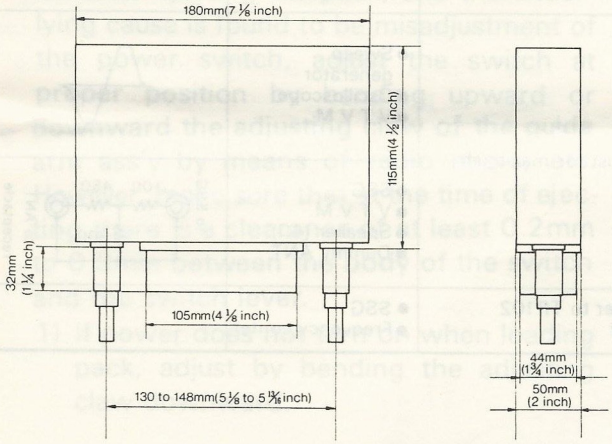

Note: Shafts can also be adjusted 4mm(5/32 inch) upward at 148mm(5 13/16 inch) position.

Model 3550R

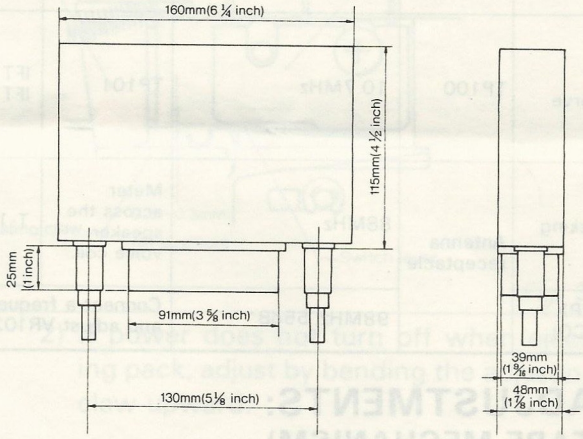

■ADJUSTMENTS:

■AM CIRCUIT

Item	Input	Frequency	Output	Method of adjustment		Instruments required	Remark
IF	TP1	460kHz	TP2	IFT-2	Adjust for maximum.	● Sweep generator ● Oscilloscope	VOL: minimum TON: high BAL: center Dial pointer: right end
Tracking	Antenna receptacle	1,620kHz	Meter across the speaker voice coil.	L-1		● SSG ● V.T.V.M ● Speaker (4Ω) ● Dummy ANT	to SSG (75Ω) 5Ω 15p 65p to ANT receptacle Use dummy antenna between SSG and ANT. receptacle.
Antenna trimmer	Receive white noise	1,400kHz	Speaker	TC201	Adjust the trimmer so that the noise output becomes maximum.	● Speaker	TC201

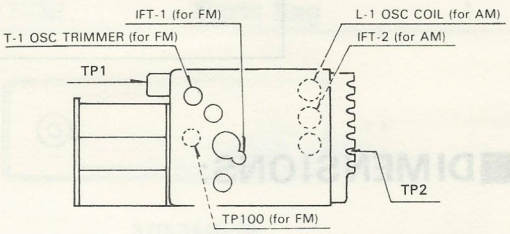

■FM CIRCUIT

Item	Input	Frequency	Output	Method of adjustment		Instruments required	Remark
S curve	TP100	10.7MHz	TP101	IFT1 IFT102	Adjust for maximum	● Sweep generator ● Oscilloscope ● V.T.V.M.	
Tracking	Antenna receptacle	88MHz	Meter across the speaker voice coil.	T-1		● SSG ● V.T.V.M. ● Speaker (4Ω) ● Dummy ANT	to SSG 10Ω 45Ω 60Ω to ANT. receptacle
< MPX > (VCO)		98MHz, 55dB	Connect a frequency counter to TP102 and adjust VR102 to 76kHz			● SSG ● Frequency conter	

■ADJUSTMENTS:
(TAPE MECHANISM)

1. Head Azimuth Adjustment (See Fig. 1)

○ Improper head azimuth is one of the causes which give rise to poor sound quality, crosstalk, etc. at the time of playback. If azimuth of the head is not proper, adjust as follows. However, to perform this adjustment, load the test tape and use the adjustment use screwdriver, inserting it through the hole in the lever mechanism (frame ass'y).

1) Play the test tape (315Hz, −10VU) and adjust the amplifier's volume control and balance control so that the output levels (gains of the playback system) of the left and right channels become equal.

2) Then play the test tape (8kHz, −10VU) and adjust the head azimuth adjusting screw so that the output level in both the forward and reverse directions of play becomes close to the respective peak (maximum output level) point. Then lock the head azimuth adjusting screw.

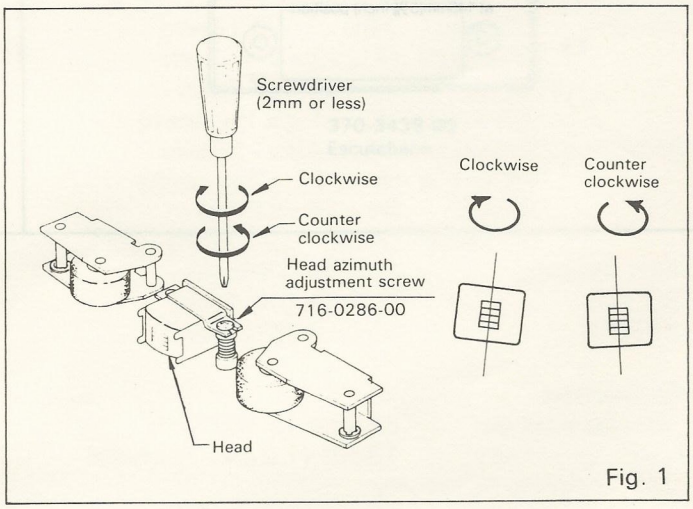

Fig. 1

2. Fast Forward, Rewind Gear Alignment
(See Fig. 2)

o If the mechanism does not operate properly and abnormal sound (gear noise) is produced at the time of fast forward and rewind, first of all check whether the sound is produced during fast forward (FF) or rewinding (REW). If it is produced during FF, adjust by bending the claw (A) to the left or right with radio pliers, etc., and if it is produced during REW, adjust by bending the claw (B) in the same manner. Adjust so that the clearance at this time between the flywheel and FF. REW gear becomes about 0.1 to 0.2mm.

1) If the gear engagement is loose and the gears produce a large noise, bend the claw away from the center line.

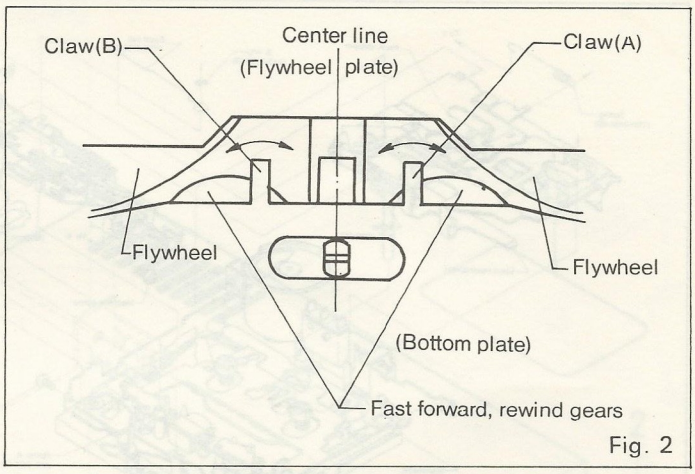

Fig. 2

2) If the gear engagement is too hard and there is no clearance between the gears, bend the claw toward the center line.

3. Adjustment of Power Switch (See Fig. 3)

o If power does not turn on when pack is inserted (loaded), or if power does not turn off after ejecting the pack, and the underlying cause is found to be misadjustment of the power switch, adjust the switch at proper position by bending upward or downward the adjusting claw of the guide arm ass'y by means of radio pliers, etc. However, make sure that at the time of ejecting there is a clearance of at least 0.2mm to 0.3mm between the body of the switch and the switch lever.

1) If power does not turn on when loading pack, adjust by bending the adjusting claw downward.

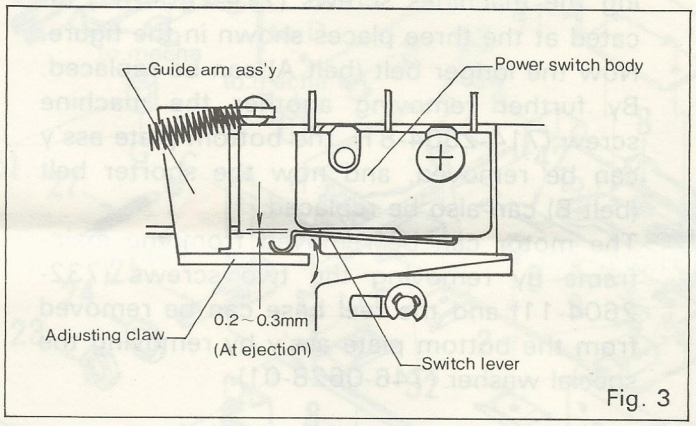

Fig. 3

2) If power does not turn off when ejecting pack, adjust by bending the adjusting claw upward.

MOUNTING, DISMOUNTING

1. Eject, Lever Mechanism (See Fig. 4)

For dismounting, first of all fully push the pack stopper to the side opposite to the pack insert port. After that drop the pack guide by pushing the end of the off arm in the same direction (pack load state). Then remove the E-ring (743-1500-10) shown in the figure, the eject rod (750-2152-01) and the spring (750-2150-00).

Now the lever mechanism and then the eject mechanism can be removed by removing the two machine screws (714-2604-81) with which the lever mechanism (frame ass'y) is fixed at the front and rear. After that the head and the roller ass'y (pinch roller) can be removed and replaced. (See Fig. 5)

These parts can be easily mounted following the procedure just reverse of that used for dismounting them. However, the following two cautions must be observed at this time. First, make sure that the roller A (610-0101-00) and roller (610-0080-00) shown in the figure are not dismount and secondly, carefully check the insert places shown in the figure.

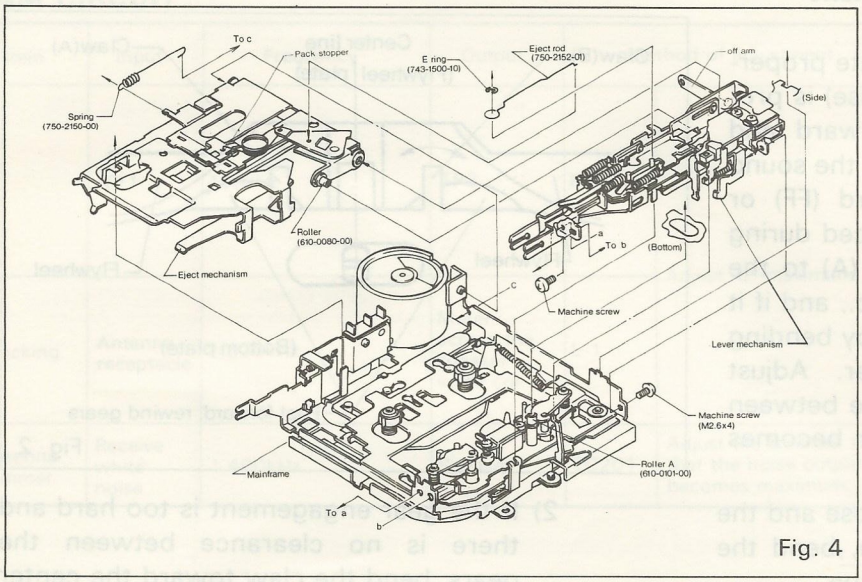

Fig. 4

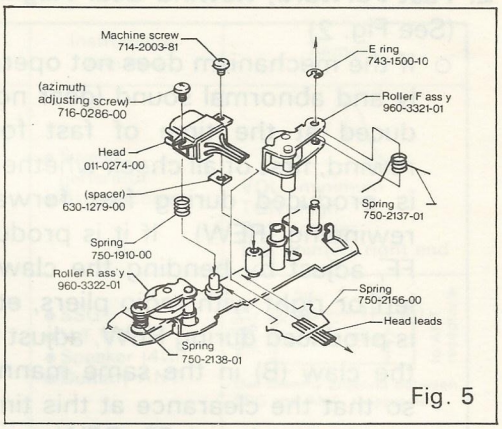

Fig. 5

2. Drive Section (See Fig. 6)

The flywheel plate can be removed by removing the machines screws (714-2604-81) located at the three places shown in the figure. Now the longer belt (belt A) can be replaced. By further removing another the machine screw (714-2604-81), the bottom plate ass'y can be removed, and now the shorter belt (belt B) can also be replaced.

The motor can be removed from the mainframe by removing the two screws (732-2604-11) and the reel base can be removed from the bottom plate ass'y by removing the special washer (746-0628-01).

As for precautions to be observed at the time of mounting, first, when installing the belt, make sure that oil and dirt, etc. do not adhere to the belt and that the belt does not get twisted and secondly, when mounting the bottom plate ass'y or the flywheel plate, carefully check insert places because there are many of them.

∗ Refer to Fig. 4 for the mounting position of the motor.

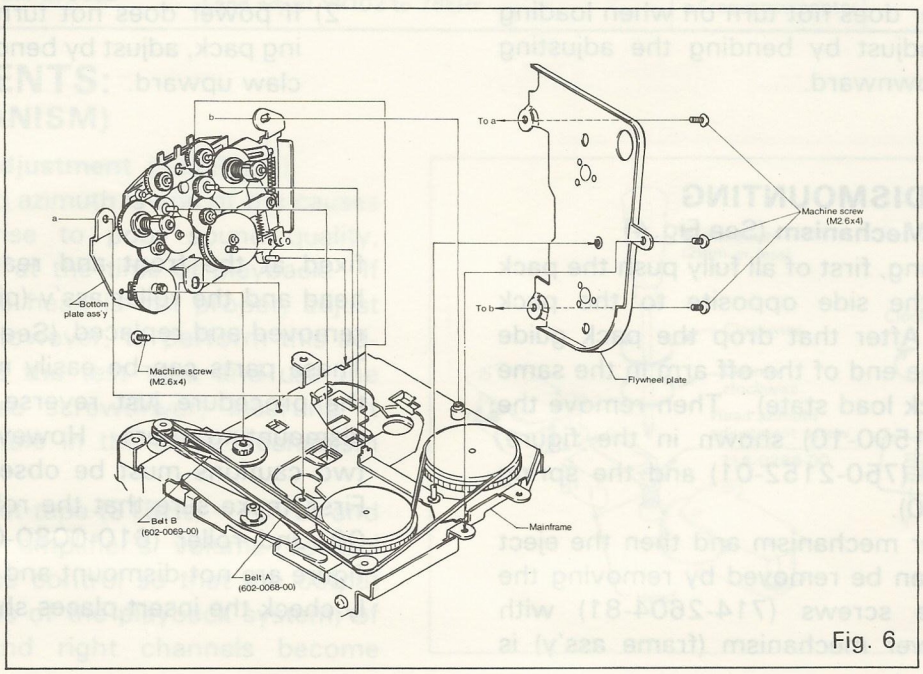

Fig. 6

■EXPLODED VIEW:

◎Main section 3500R (PE-583A)

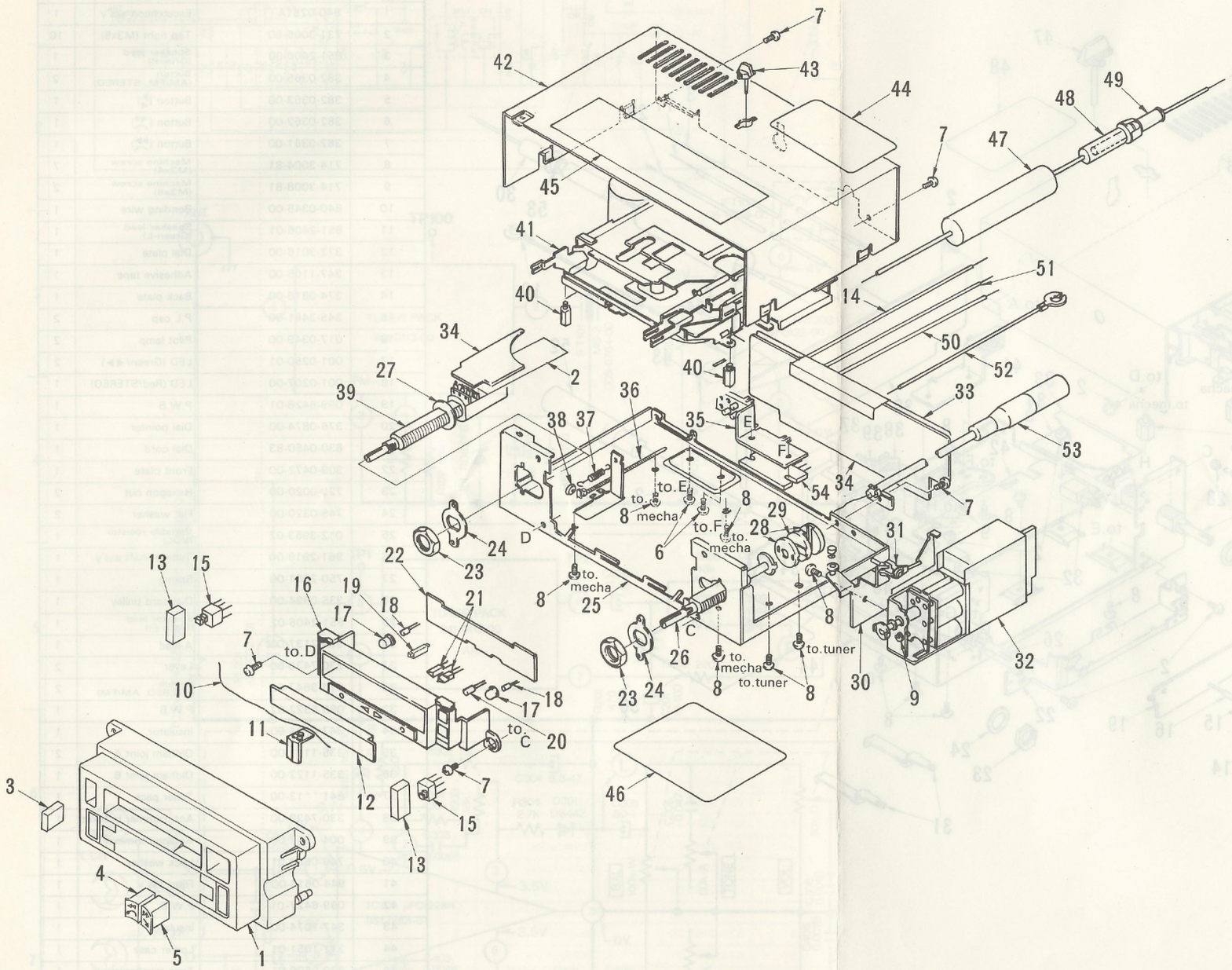

REF.NO.	PART NO. (ORDER NO.)	DESCRIPTION	Q'TY
51	851-2406-01	Speaker lead (Green-L)	1
52	840-0345-00	Bonding wire	1
53	092-0522-06	Antenna receptacle	1
54	051-0233-00	IC (TA7227P)	1

■PARTS LIST:

◎Main section 3500R (PE-583A)

REF.NO.	PART NO. (ORDER NO.)	DESCRIPTION	Q'TY
1	940-0280A	Escutcheon ass'y	1
2	347-0791-00	Insulator	1
3	382-0358-00	Button (◀▶)	1
4	382-0357-00	Button (⏪)	1
5	382-0356-00	Button (⏩)	1
6	714-3008-81	Machine screw (M3x8)	2
7	731-3005-81	Tap tight (M3x5)	5
8	714-3004-81	Machine screw (M3x4)	7
9	746-0668-01	Lock washer	1
10	830-0500-83	Dial cord	1
11	376-0873-00	Dial pointer	1
12	372-3015-00	Dial plate	1
13	382-0360-00	Button (AM/FM, STEREO)	2
14	851-2406-02	Speaker lead (Black-⊖)	1
15	013-3648-00	Switch (STEREO, AM/FM)	2
16	374-0815-01	Back plate	1
17	345-3481-00	P.L cap	2
18	017-0349-00	Pilot lamp	2
19	335-1361-00	Dummy pin	1
20	001-0207-00	LED (Red/STEREO)	1
21	001-0250-01	LED (Green/◁▷)	2
22	099-6428-00	P.W.B	1
23	722-0020-00	Hexagon nut	2
24	330-7421-00	Adjustable plate	2
25	311-1058-00	Lower case	1
26	961-2918-00	Tuning shaft ass'y	1
27	745-0524-00	Flat washer	1
28	335-0881-00	Oldham joint	2
29	335-0882-01	Oldham joint	1
30	330-7435-00	Trimmer bracket	1
31	004-1552-00	Antenna trimmer	1
32	941-0113-00	Tuner pack	1
33	347-1073-00	Insulator	1
34	099-6322-02	P.W.B	1
35	944-0614-00	Filter ass'y	1
36	335-0833-01	Lead holder	1
37	750-2001-00	Spring	1
38	335-0894-00	Dial cord pulley	1
39	012-3953-00	Variable resistor (VOL)	1
40	341-1275-00	Spacer	4
41	930-0500-00	Tape mechanism	1
42	310-1079-00	Upper case	1
43	335-1360-00	Lock pin	1
44	285-1000-00	Guide label	1
45	285-0993-01	Guide label	1
46	286-4772-00	Set plate	1
47	850-2136-00	A-lead	1
48	120-0030-00	Fuse (3A)	1
49	850-2137-00	A-lead	1
50	851-2406-00	Speaker lead (Gray-R)	1

■EXPLODED VIEW:

◎Main section 3550R (PE-584A)

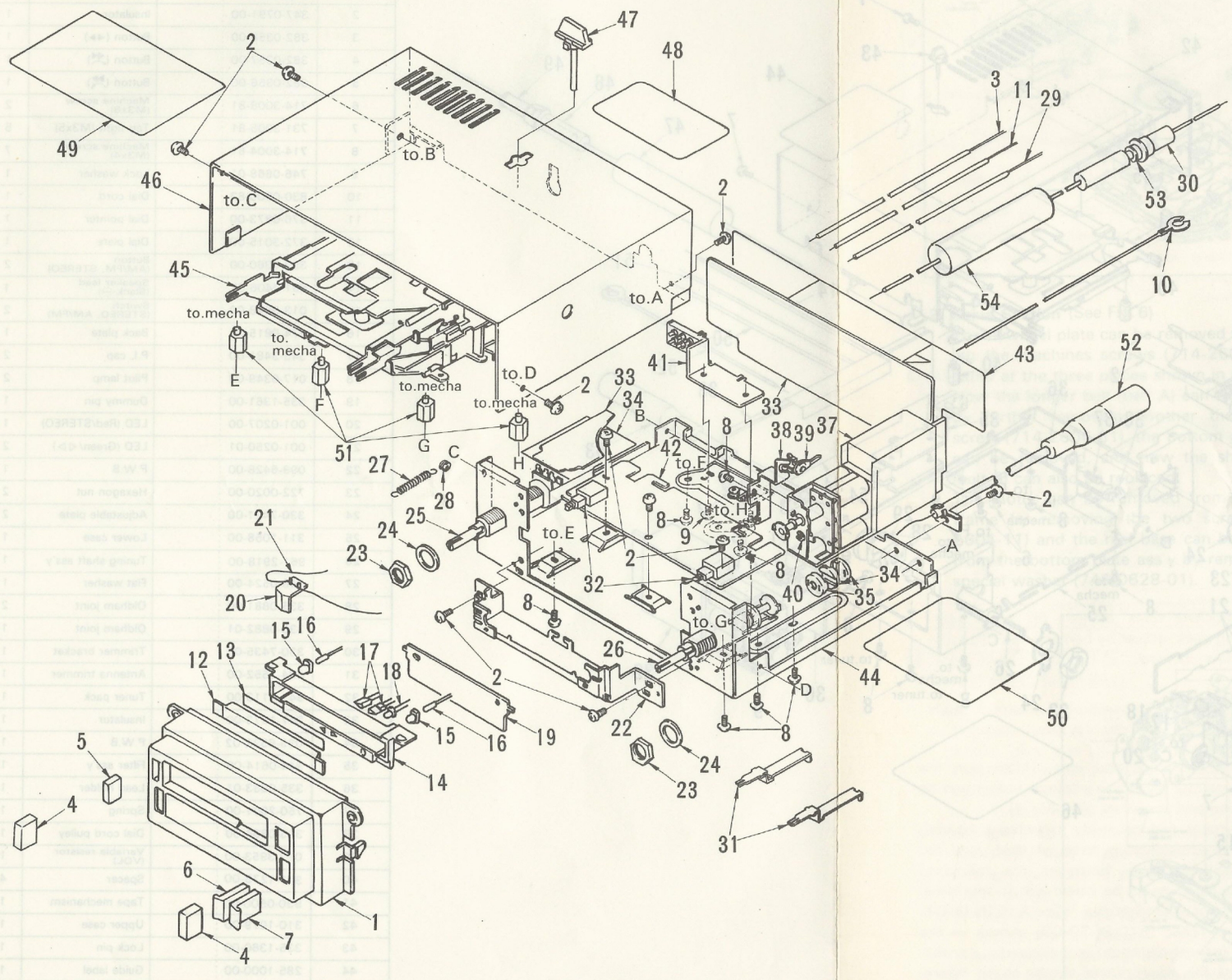

REF.NO.	PART NO. (ORDER NO.)	DESCRIPTION	Q'TY
51	341-1276-00	Spacer	4
52	092-0522-06	Antenna receptacle	1
53	120-0030-00	Fuse (3A)	1
54	850-2136-00	A-lead	1

■PARTS LIST:

◎Main section 3550R (PE-584A)

REF.NO.	PART NO. (ORDER NO.)	DESCRIPTION	Q'TY
1	940-0281A	Escutcheon ass'y	1
2	731-3005-80	Tap tight (M3x5)	10
3	851-2406-00	Speaker lead (Gray-R)	1
4	382-0365-00	Button (AM/FM, STEREO)	2
5	382-0363-00	Button (▶)	1
6	382-0362-00	Button (◀◀)	1
7	382-0361-00	Button (▶▶)	1
8	714-3004-81	Machine screw (M3x4)	7
9	714-3008-81	Machine screw (M3x8)	2
10	840-0345-00	Bonding wire	1
11	851-2406-01	Speaker lead (Green-L)	1
12	372-3016-00	Dial plate	1
13	347-1105-00	Adhesive tape	1
14	374-0816-00	Back plate	1
15	345-3481-00	P.L cap	2
16	017-0349-00	Pilot lamp	2
17	001-0250-01	LED (Green/◀▶)	2
18	001-0207-00	LED (Red/STEREO)	1
19	099-6426-01	P.W.B	1
20	376-0874-00	Dial pointer	1
21	830-0450-83	Dial cord	1
22	309-0472-00	Front plate	1
23	722-0020-00	Hexagon nut	2
24	745-0320-00	Flat washer	2
25	012-3953-02	Variable resistor (VOL)	1
26	961-2919-00	Tuning shaft ass'y	1
27	750-2001-00	Spring	1
28	335-0894-00	Dial cord pulley	1
29	851-2406-02	Speaker lead (Black-⊖)	1
30	850-2137-00	A-lead	1
31	330-7438-00	Lever	2
32	013-3647-00	Switch (STEREO, AM/FM)	2
33	099-6322-02	P.W.B	1
34	347-0791-00	Insulator	1
35	335-1121-00	Oldham joint A	2
36	335-1122-00	Oldham joint B	1
37	941 ˆˆ13-00	Tuner pack	1
38	330-7439-00	Ant. trimmer bracket	1
39	004-1552-00	Antenna trimmer	1
40	746-0688-01	Lock washer	1
41	944-0614-00	Filter ass'y	1
42	099-6427-01	P.W.B	1
43	347-1074-00	Insulator	1
44	311-1051-01	Lower case	1
45	930-0500-01	Tape mechanism	1
46	310-1072-01	Upper case	1
47	335-1360-00	Lock pin	1
48	285-1000-00	Guide label	1
49	285-0993-01	Guide label	1
50	286-4773-00	Set plate	1

■EXPLODED VIEW:

◎Mechanism section

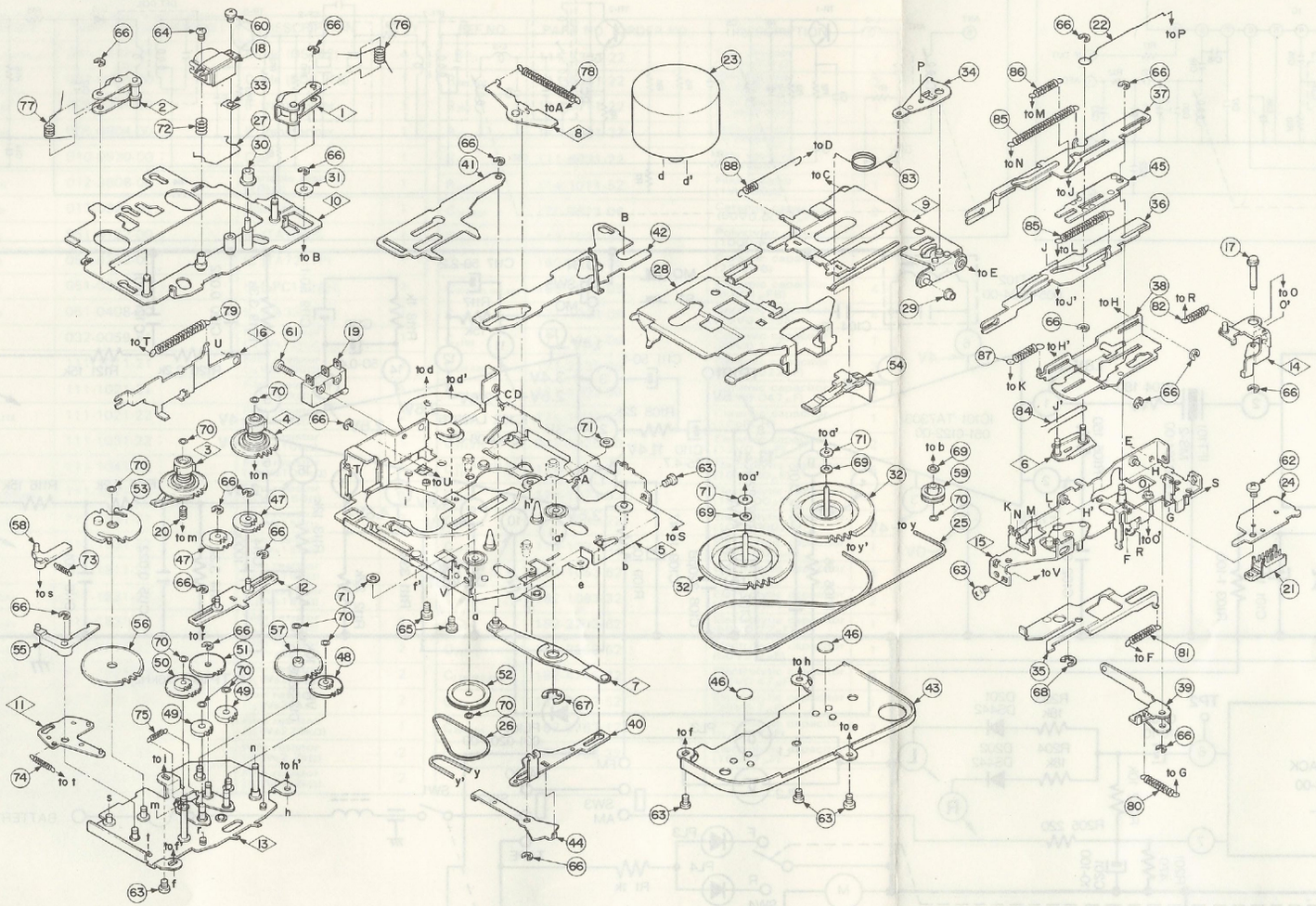

REF.NO.	PART NO. (ORDER NO.)	DESCRIPTION	Q'TY
78	750-2139-00	Spring	1
79	750-2140-00	Spring	1
80	750-2141-00	Spring	1
81	750-2142-01	Spring	1
82	750-2143-01	Spring	1
83	750-2151-01	Spring	1
84	750-2146-01	Spring	1
85	750-2147-01	Spring	2
86	750-2148-00	Spring	1
87	750-2149-01	Spring	1
88	750-2150-00	Spring	1

REF.NO.	PART NO. (ORDER NO.)	DESCRIPTION	Q'TY
64	716-0286-00	Screw (for Head azimuth)	1
65	732-2604-11	Sems screw (M2.6x4)	2
66	743-1500-10	E-ring	19
67	743-4000-10	E-ring	1
68	744-0007-00	E-ring	1
69	746-0624-00	Washer	3
70	746-0628-01	Washer	10
71	746-0688-01	Washer	4
72	750-1910-00	Spring	1
73	750-2134-00	Spring	1
74	750-2135-01	Spring	1
75	750-2136-00	Spring	1
76	750-2137-01	Spring	1
77	750-2138-01	Spring	1

REF.NO.	PART NO. (ORDER NO.)	DESCRIPTION	Q'TY
50	631-0356-00	Gear-R	1
51	631-0357-00	Gear-F	1
52	631-0358-01	Gear pulley	1
53	631-0359-01	Power gear	1
54	631-0360-01	Pack stopper	1
55	631-0361-00	Lock link	1
56	631-0362-01	Cam gear	1
57	631-0363-00	Gear-A	1
58	631-0364-01	Sub lock link	1
59	631-0370-00	Tension pulley	1
60	714-2003-81	Machine screw (M2x3)	1
61	714-2308-81	Machine screw (M2.3x8)	1
62	714-2603-81	Machine screw (M2.6x3)	1
63	714-2604-81	Machine screw (M2.6x4)	6

■PARTS LIST: ◎Mechanism section

REF.NO.	PART NO. (ORDER NO.)	DESCRIPTION	Q'TY
1	960-3321-01	Roller F ass'y	1
2	960-3322-01	Roller R ass'y	1
3	960-3323-01	Reel base ass'y	1
4	960-3324-01	Reel base ass'y	1
5	960-3325-01	Deck plate ass'y	1
6	960-3327-00	Spring H ass'y	1
7	960-3328-01	Coupling P ass'y	1
8	960-3329-01	Link ass'y	1
9	960-3330-01	Guide arm ass'y	1
10	960-3331-01	Head plate ass'y	1
11	960-3332-01	Check P-B ass'y	1
12	960-3333-00	FF plate ass'y	1
13	960-3334-01	Bottom P ass'y	1
14	960-3336-01	Lock plate ass'y	1
15	960-3337-01	Frame ass'y	1
16	960-3338-01 960-3339-01	Program lever ass'y (for PE-583A) (for PE-584A)	1
17	632-1153-01	Lock plate pin	1
18	011-0274-00	Head	1
19	013-2690-03	Switch	1
20	750-2155-00	Spring	1
21	013-3646-00	Switch	1
22	750-2152-01	Spring	1
23	960-3353-00	D.C. motor ass'y	1
24	099-6334-01	P.W.B	1
25	602-0068-00	Belt-A	1
26	602-0069-00	Belt-B	1
27	750-2156-00	Spring	1
28	606-0071-01	Pack guide	1
29	610-0080-00	Roller	1
30	610-0101-00	Roller-A	1
31	610-0104-01	Roller	1
32	611-0062-00	Flywheel	2
33	630-1279-00	Spacer	1
34	630-1394-00	Swing plate	1
35	630-1399-01	Off plate-B	1
36	630-1401-01 630-1402-01	FF lever-A (for PE-583A) (for PE-584A)	1
37	630-1403-01	REW lever	1
38	630-1404-01	Eject plate	1
39	630-1405-00	Off arm	1
40	630-1407-00	FF plate-B	1
41	630-1410-00	Power plate	1
42	630-1411-01	Change plate	1
43	630-1415-01	Flywheel plate	1
44	630-1420-00	FF link	1
45	630-1422-01	Hold plate	1
46	631-0293-00	Thrust washer	2
47	631-0353-00	FF-REW gear	2
48	631-0354-01	Gear-B	1
49	631-0355-00	Play idler gear	2

■CIRCUIT DIAGRAM:

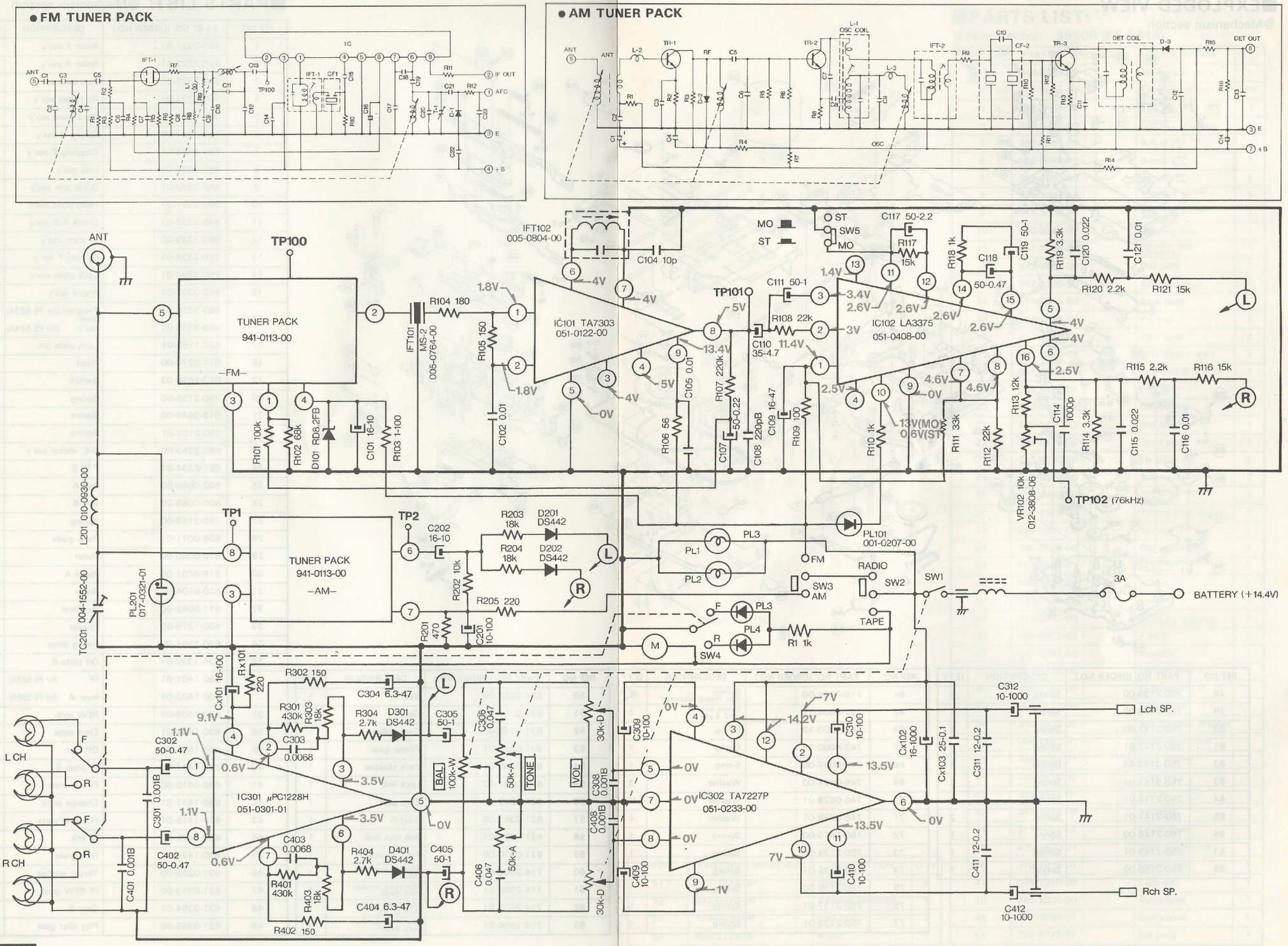

■PRINTED WIRING BOARD:

◎3500R (PE-583A)

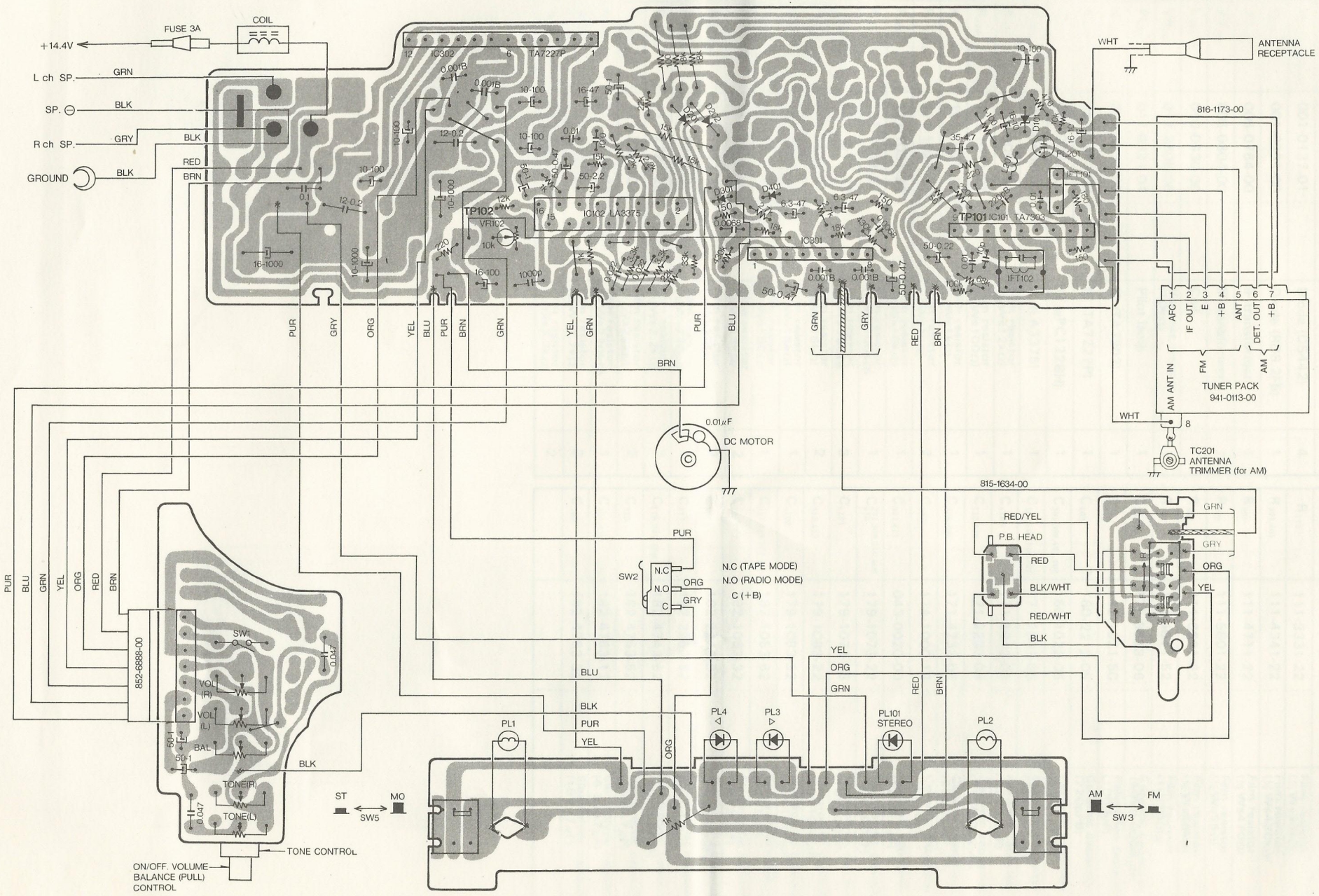

■PRINTED WIRING BOARD:

◎3550R (PE-584A)

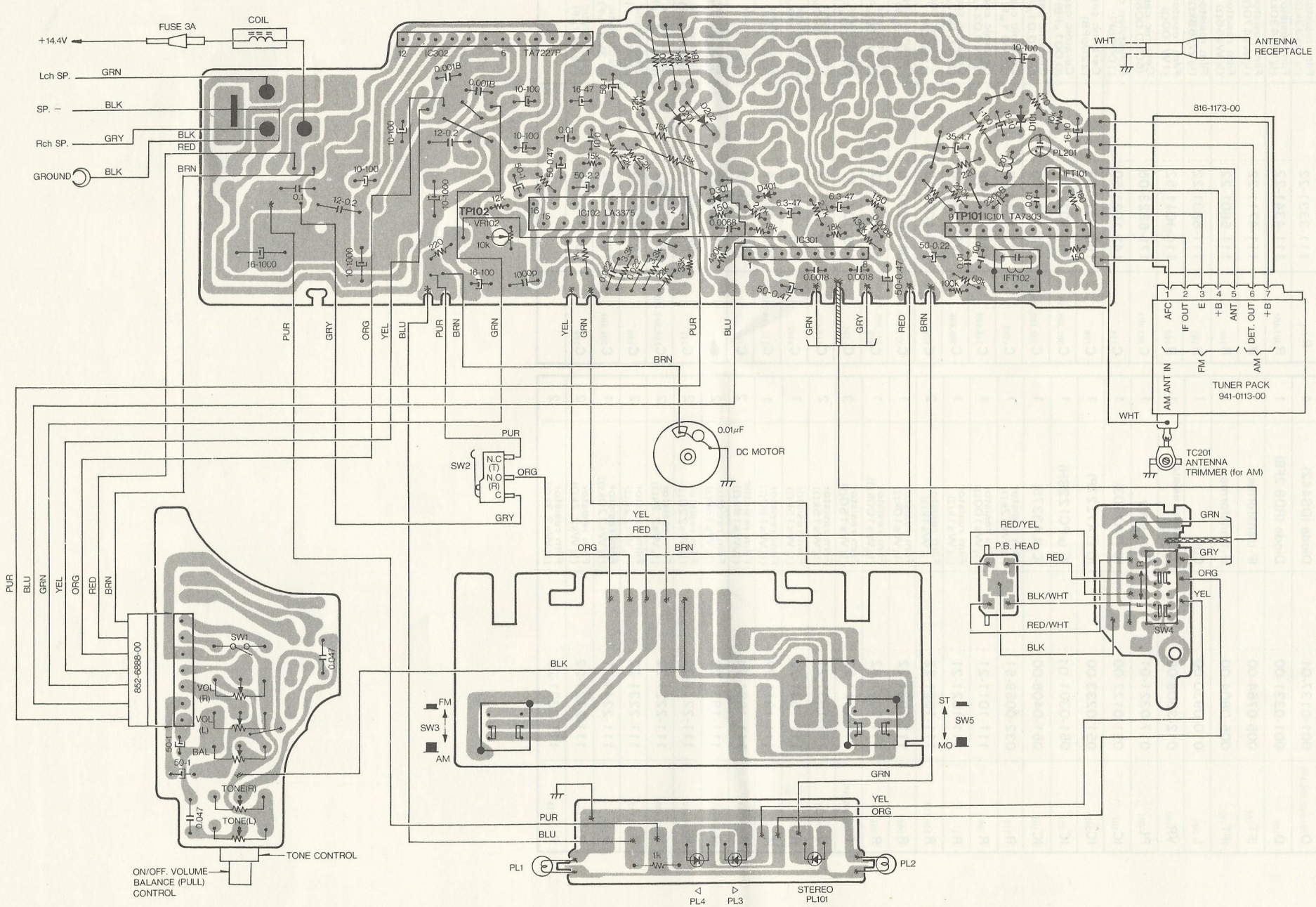

3500R
3550R

■PARTS LIST:

◎Electrical section

REF.NO.	PART NO. (ORDER NO.)	DESCRIPTION	Q'TY
$D_{201,202,301,401}$	001-0137-01	Diode (DS442)	4
D_{101}	001-0331-00	Diode (RD8.2FB)	1
IFT_{101}	005-0764-00	IF-transformer	1
IFT_{102}	005-0804-00	IF-transformer	1
L_{201}	010-0930-00	Coil	1
VR_{102}	012-3808-06	Variable resistor (10kΩ)	1
PL_{201}	017-0321-01	Pilot lamp	1
IC_{101}	051-0122-00	IC (TA7303)	1
IC_{302}	051-0233-00	IC (TA7227P)	1
IC_{301}	051-0301-01	IC (μPC1228H)	1
IC_{102}	051-0408-00	IC (LA3375)	1
R_{113}	032-0059-51	Film resistor (¼Ws12kΩ)	1
R_{109}	111-1011-21	Film resistor (¼Ws100Ω)	1
R_{1}	111-1021-21	Film resistor (¼Ws1kΩ)	1
$R_{110,118}$	111-1021-22	Film resistor (¼Ws1kΩ)	2
R_{202}	111-1031-22	Film resistor (¼Ws10kΩ)	1
R_{101}	111-1041-22	Film resistor (¼Ws100kΩ)	1
$R_{105,302,402}$	111-1511-22	Film resistor (¼Ws150Ω)	3
$R_{116,121}$	111-1531-21	Film resistor (¼Ws15kΩ)	2
R_{117}	111-1531-22	Film resistor (¼Ws15kΩ)	1
R_{104}	111-1811-22	Film resistor (¼Ws180Ω)	1
$R_{203,204}$	111-1831-21	Film resistor (¼Ws18kΩ)	2
$R_{303,403}$	111-1831-22	Film resistor (¼Ws18kΩ)	2
$R_{205,x101}$	111-2211-22	Film resistor (¼Ws220Ω)	2
$R_{115,120}$	111-2221-22	Film resistor (¼Ws2.2kΩ)	2
$R_{108,112}$	111-2231-22	Film resistor (¼Ws22kΩ)	2
R_{107}	111-2241-22	Film resistor (¼Ws220kΩ)	1
$R_{304,404}$	111-2721-22	Film resistor (¼Ws2.7kΩ)	2
$R_{114,119}$	111-3321-22	Film resistor (¼Ws3.3kΩ)	2

REF.NO.	PART NO. (ORDER NO.)	DESCRIPTION	Q'TY
R_{111}	111-3331-22	Film resistor (¼Ws33kΩ)	1
$R_{301,401}$	111-4341-22	Film resistor (¼Ws430kΩ)	2
R_{201}	111-4711-22	Film resistor (¼Ws470Ω)	1
R_{106}	111-5601-22	Film resistor (¼Ws56Ω)	1
R_{102}	111-6831-22	Film resistor (¼Ws68kΩ)	1
R_{103}	114-1011-52	Film resistor (1W100Ω)	1
$C_{303,403}$	171-6823-06	Ceramic capacitor (50V0.0068μF)	2
C_{114}	143-1021-50	Polystylen capacitor (1000pF)	1
C_{108}	160-2212-05	Ceramic capacitor (220pFB)	1
$C_{301,308,401,408}$	160-1022-05	Ceramic capacitor (0.001μFB)	4
$C_{102,105,116,121}$	171-1033-06	Ceramic capacitor (25V0.01μF)	4
C_{x103}	171-1043-06	Ceramic capacitor (25V0.1μF)	1
$C_{115,120}$	171-2233-06	Ceramic capacitor (25V0.022μF)	2
$C_{306,406}$	171-4733-06	Ceramic capacitor (25V0.047μF)	2
C_{104}	174-1000-13	Ceramic capacitor (10pFCH)	1
$C_{311,411}$	043-0020-00	Ceramic capacitor (12V0.2μF)	2
$C^{201,309,310,409}_{410}$	179-1073-22	Electrolytic capacitor (10V100μF)	5
C_{x101}	179-1073-33	Electrolytic capacitor (16V100μF)	1
$C_{312,412}$	179-1083-22	Electrolytic capacitor (10V1000μF)	2
C_{x102}	179-1083-32	Electrolytic capacitor (16V1000μF)	1
$C_{111,119,305,405}$	182-1053-62	Electrolytic capacitor (50V1μF)	4
$C_{101,202}$	182-1063-32	Electrolytic capacitor (16V10μF)	2
C_{107}	182-2243-62	Electrolytic capacitor (50V0.22μF)	1
C_{117}	182-2253-62	Electrolytic capacitor (50V2.2μF)	1
$C_{118,302,402}$	182-4743-62	Electrolytic capacitor (50V0.47μF)	3
C_{110}	182-4753-52	Electrolytic capacitor (35V4.7μF)	1
$C_{304,404}$	182-4763-12	Electrolytic capacitor (6.3V47μF)	2
C_{109}	182-4763-32	Electrolytic capacitor (16V47μF)	1