ALPINE SERVICE MANUAL

GRAPHIC EQUALIZER

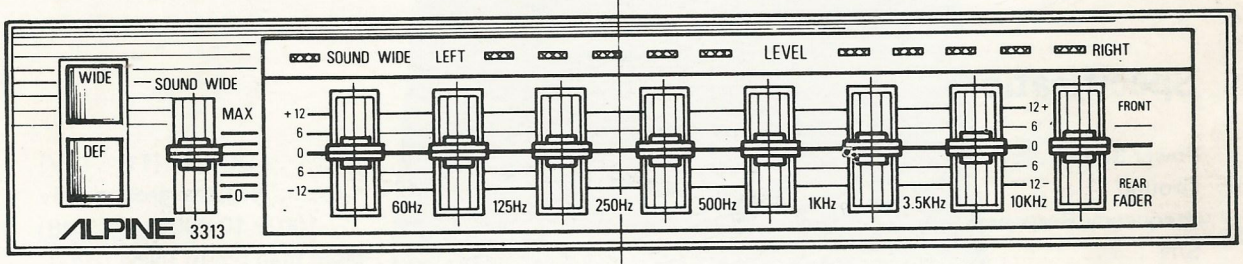

3313

Contents

Specifications 2
Parts Locations and Disassembly Instructions ..... 3 to 5
Adjustment Procedure 5
Block Diagram 6
Trouble Shooting 7
Wiring Diagram 8
Schematic Diagram 9
Electrical Parts List ..... 10 to 14
Semi-Conductor Lead Identification 15
Parts Layout on P.C.Boards ..... 16 to 19
Exploded View (Cabinet) 20
Cabinet Assembly Parts List 21
Packing Method View 22
Packing Assembly Parts List 23

Specifications

Power Source ..... DC 14V (11 ~ 16V)
Ground ..... Negative ground only
Frequency Response ..... 100 ~ 10,000 Hz (± 3 dB)
S/N ..... More than 55 dB (New IHF.4)
Graphic Equalizer ..... 7 Bands 60, 125, 250, 500 Hz, 1, 3.5, 10 kHz ± 10 dB each
Input Voltage ..... 500 mV ± 2 dB/8 ~ 12kohm
Output Level ..... 500 mV ± 2 dB/1kohm
Semiconductors ..... 12 ICs, 16 Trs, 22 Diodes
Dimensions ..... 160 (W) x 30 (H) x 105 (D) mm
Weight ..... 0.8 kg

- Specifications and Appearances are subject to change for improvement without prior notice.

Parts Locations and Diassembly Instructions

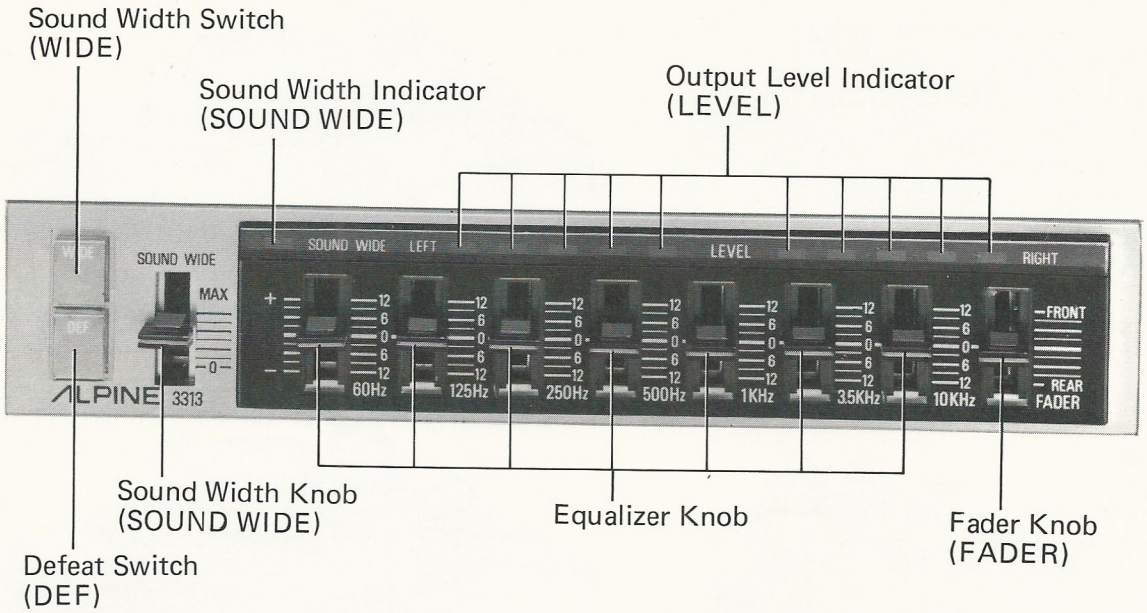

Figure 1

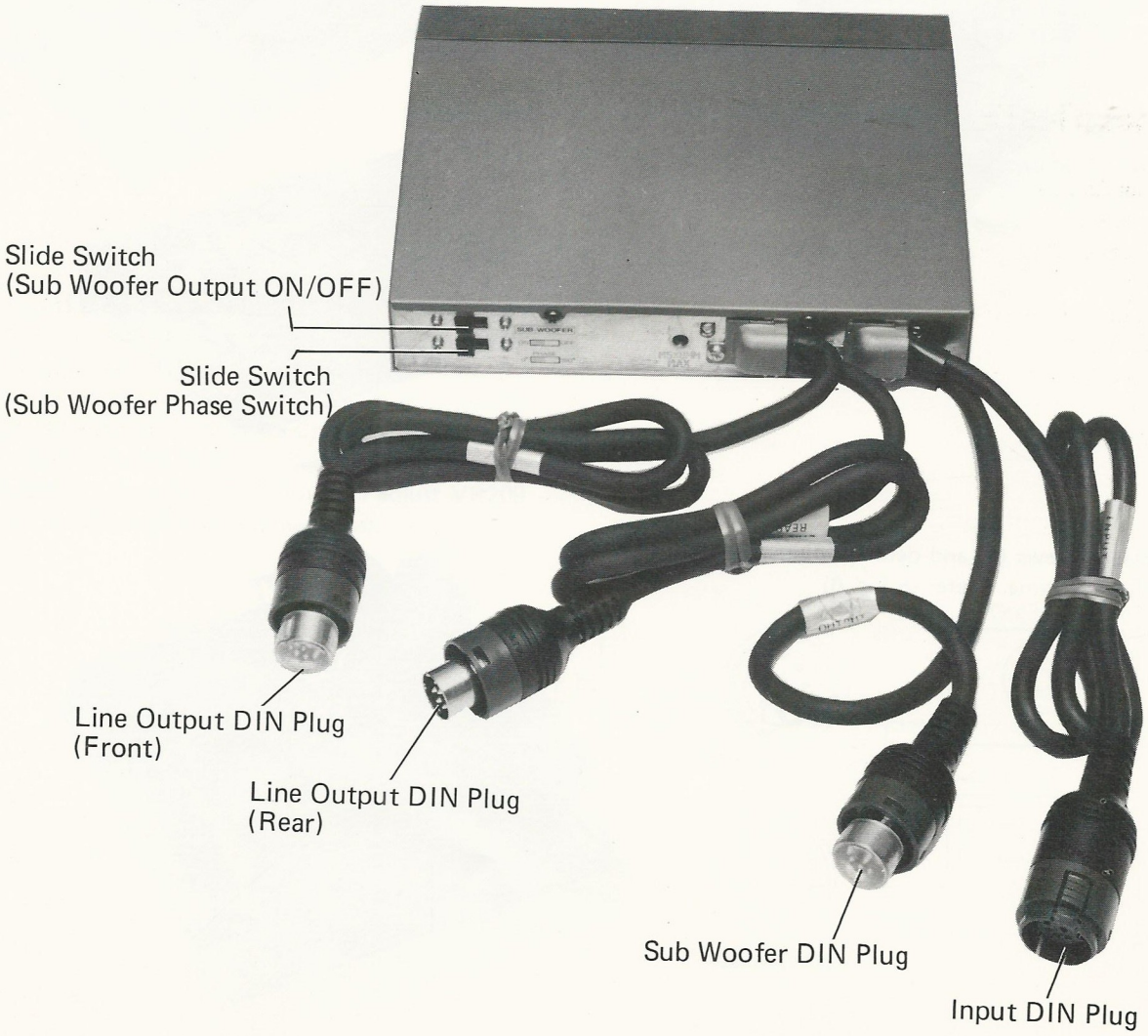

Figure 2

1. Top Cover
   (1) Remove 6 screws (☆). (Refer to Fig. 3)
   (2) Detach Top Cover.

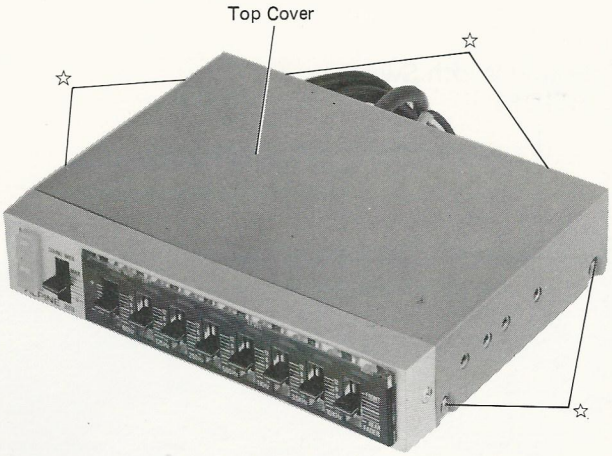

Figure 3

2. Nosepiece
   (1) Remove 9 volume knobs. (Refer to Fig. 4)
   (2) Remove 2 dish screws (○). (Refer to Fig. 4)
   (3) Detach Nosepiece.

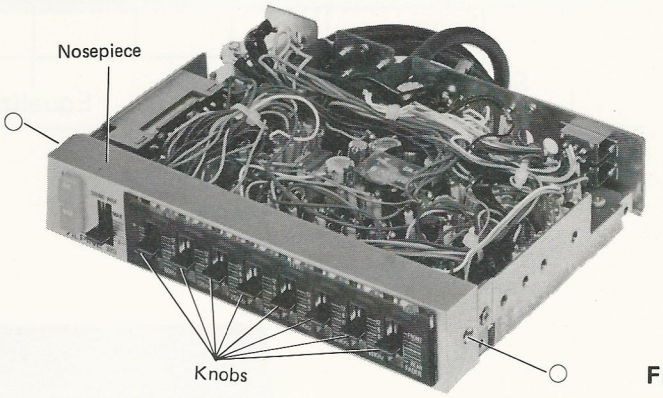

Figure 4

3. Volume/LED PCB
   (1) Remove 2 screws (□) and detach Front Frame. (Refer to Fig. 5)

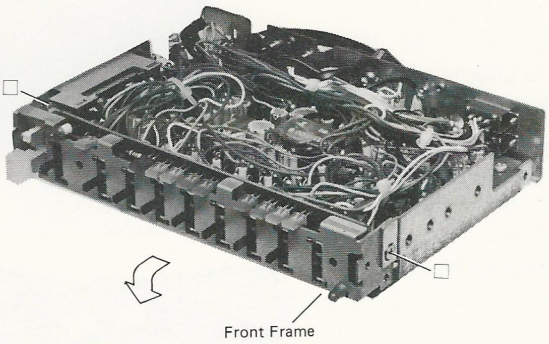

Figure 5

   (2) Remove 4 screws (○) and detach Volume/LED PCB from Front Frame. (Refer to Fig. 6)

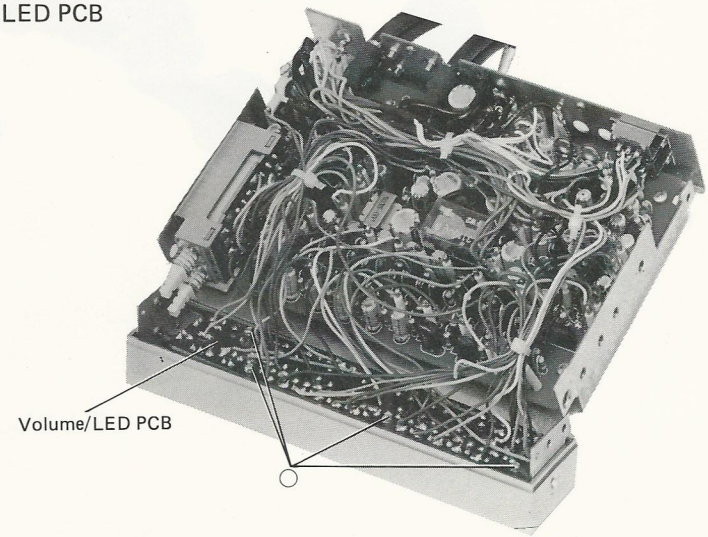

Figure 6

4. Equalizer PCB
   (1) Remove 4 screws (☆) and 4 screws (□) and detach Switch and DIN cord. Then, loosen Hex bolt (○). (Refer to Fig. 7)
   * Unsolder DIN cord lead wire from Panel Chassis, and detach it from Chassis.
   (2) Remove 4 screws (△) and carefully lead wire connections remove Equalizer PCB. (Refer to Fig. 7)

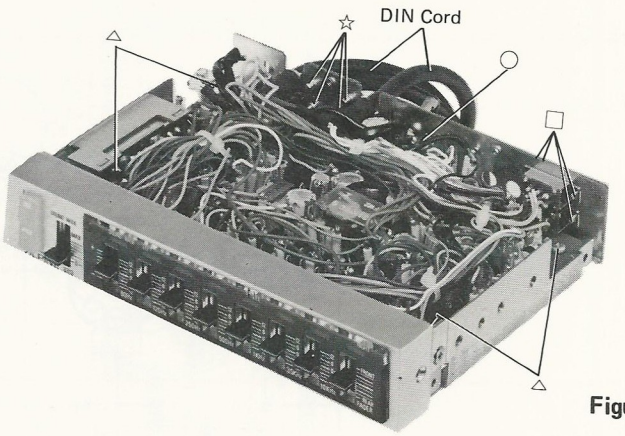

Figure 7

5. Switch PCB
   Remove 2 Dish Screws (☆) and detach Switch with Switch Bracket from Bottom Cover. Then, remove a screw (★) and take out PCB. (Refer to Fig. 8-1 and 8-2)

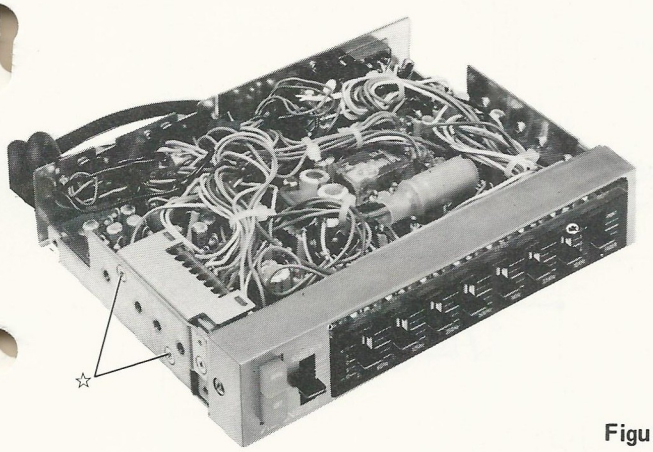

Figure 8-1

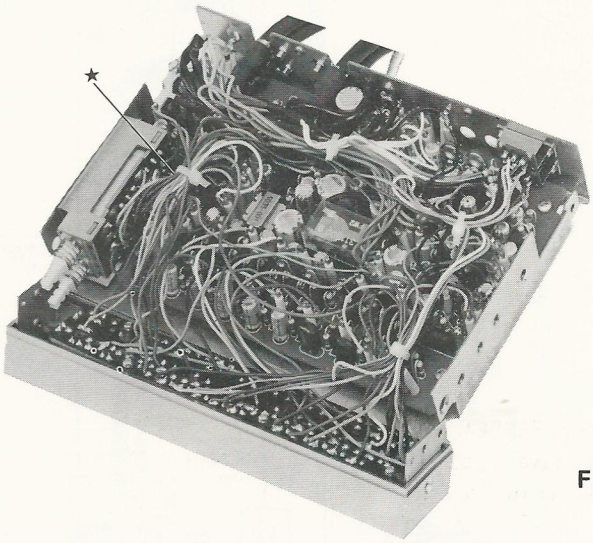

Figure 8-2

Alignment Procedure

Sub Woofer Output Level

Set up as below and apply 50 Hz 0.5 V signal. Adjust semi-fixed resistor VR209 (L Channel) and VR210 (R Channel) so that output of Sub Woofer Connector show 0.5 V. Use small screw driver to adjust VR209 and VR210 through holes on rear panel.

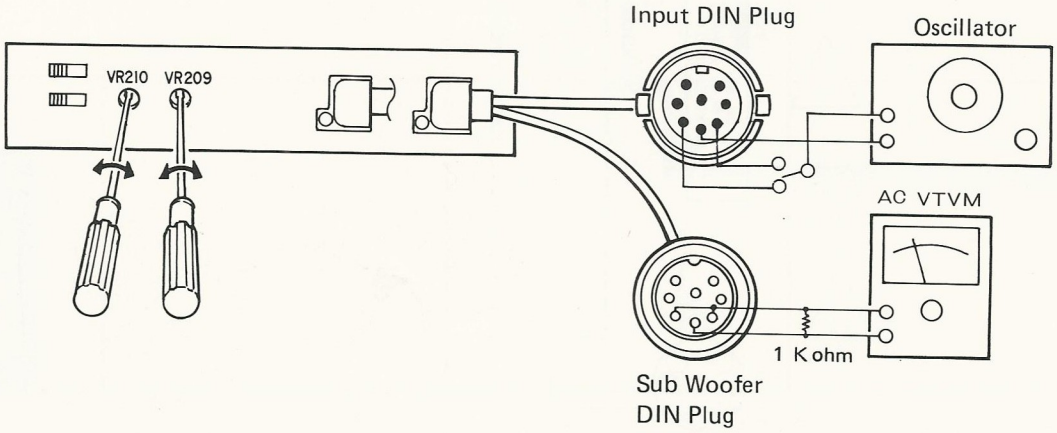

Block Diagram

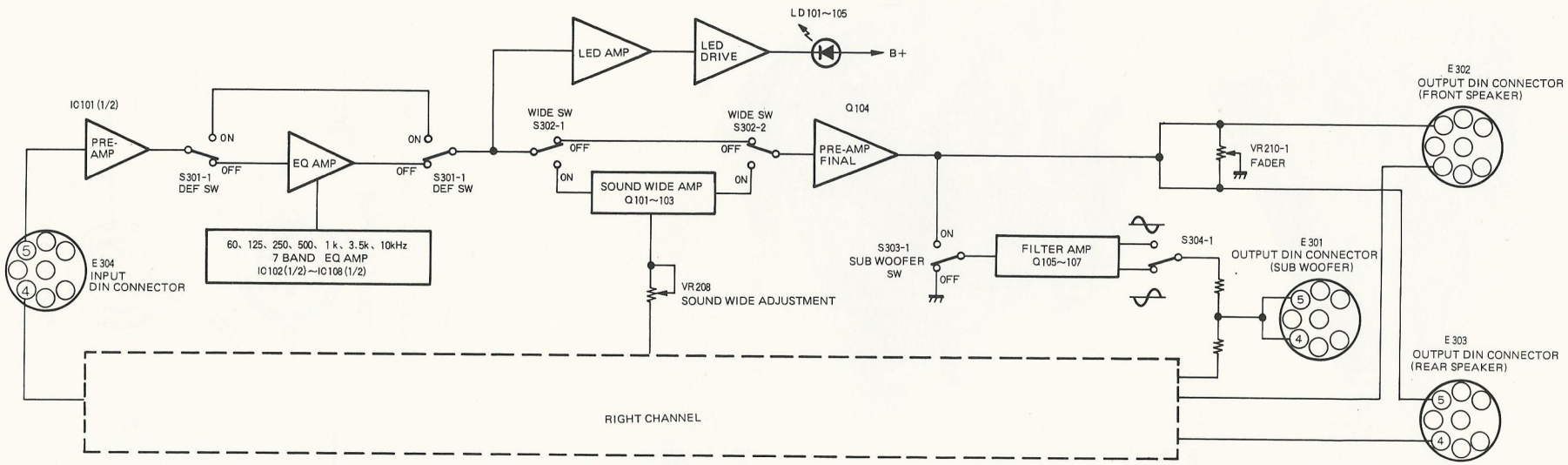

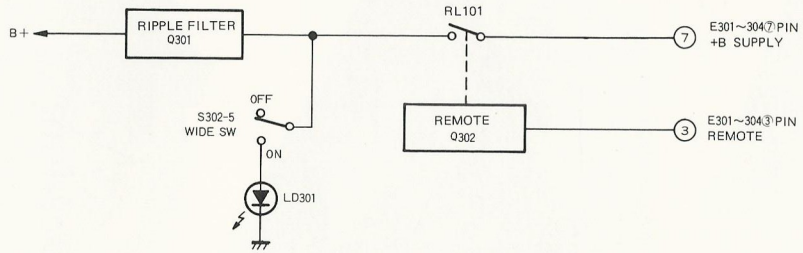

Trouble Shooting

Service procedures common to sophisticated electronic instrument is applicable to this unit. In general, a carfly approach would include following steps.

1. Operate unit with a test, or quality tape to appraise symptons.
2. Determine trouble is electrical or mechanical.
3. Determine malfunction is due to Amp P.C.B., Volume/LED P.C.B., or Switch P.C.B.
4. Checkout voltage distribution at IC's and transistors.
5. Pinpoint defective section and replace defective component(s).

NO SOUND

1. Blown fuse.
2. Open circuit in power supply source.
3. Output cord disconnected.
4. Input line disconnected.
5. Input connector disconnected.
6. Defective tuner or deck.
7. Defective IC, transistor, doide, relay and circuitry component.

SOUND DISTORTED

1. Defective tuner or deck.
2. Improper input level or impedance not matched.
3. Defective IC.
4. Faulty power source.

SOUNDLEVEL LOW and/or DISTORTED IN ONE CHANNEL

1. Defective tuner or deck.
2. Disconnected input or output cord.
3. Too long output cord length in one channel.
4. Defective IC.

Wiring Diagram

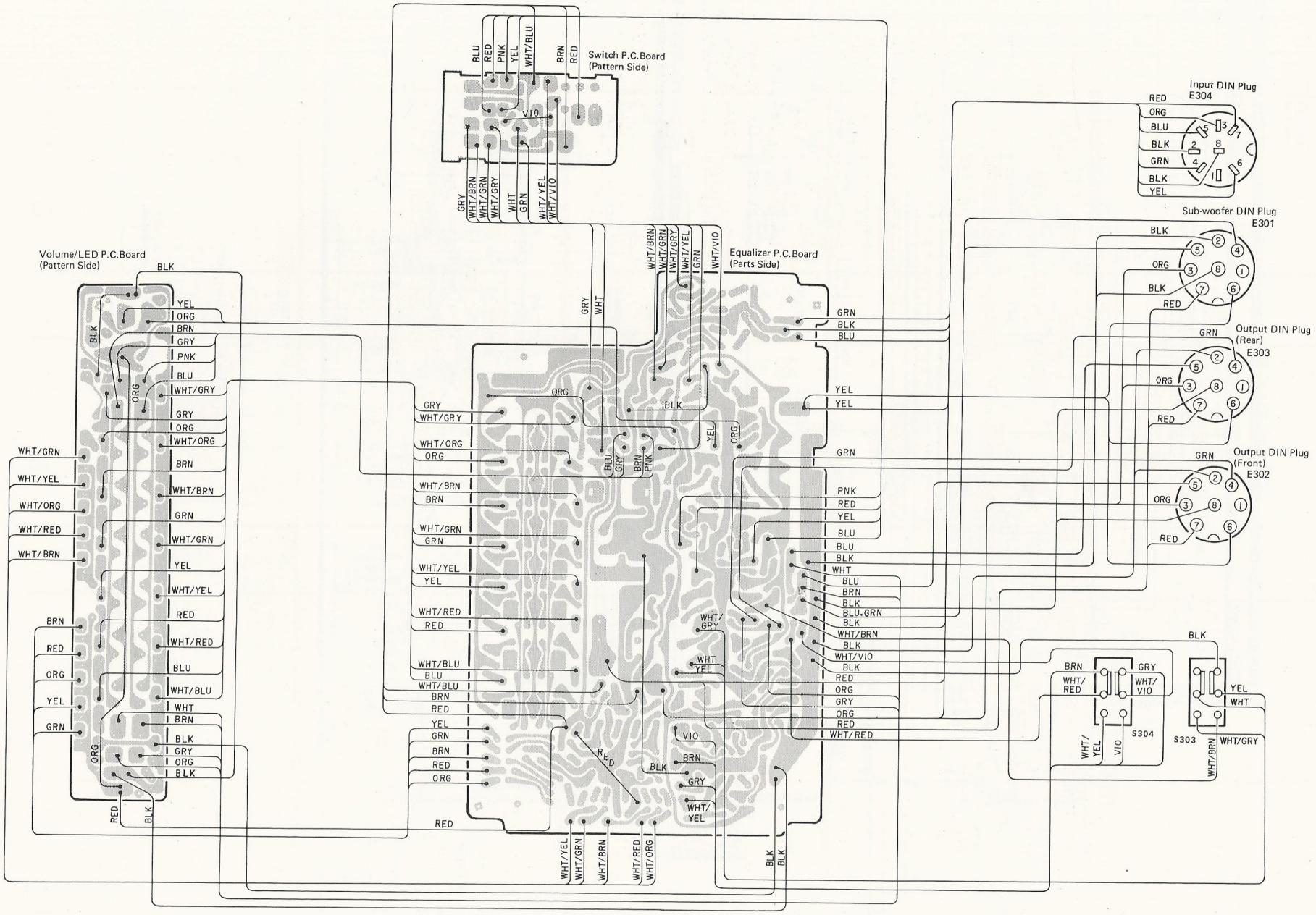

Schematic Diagram

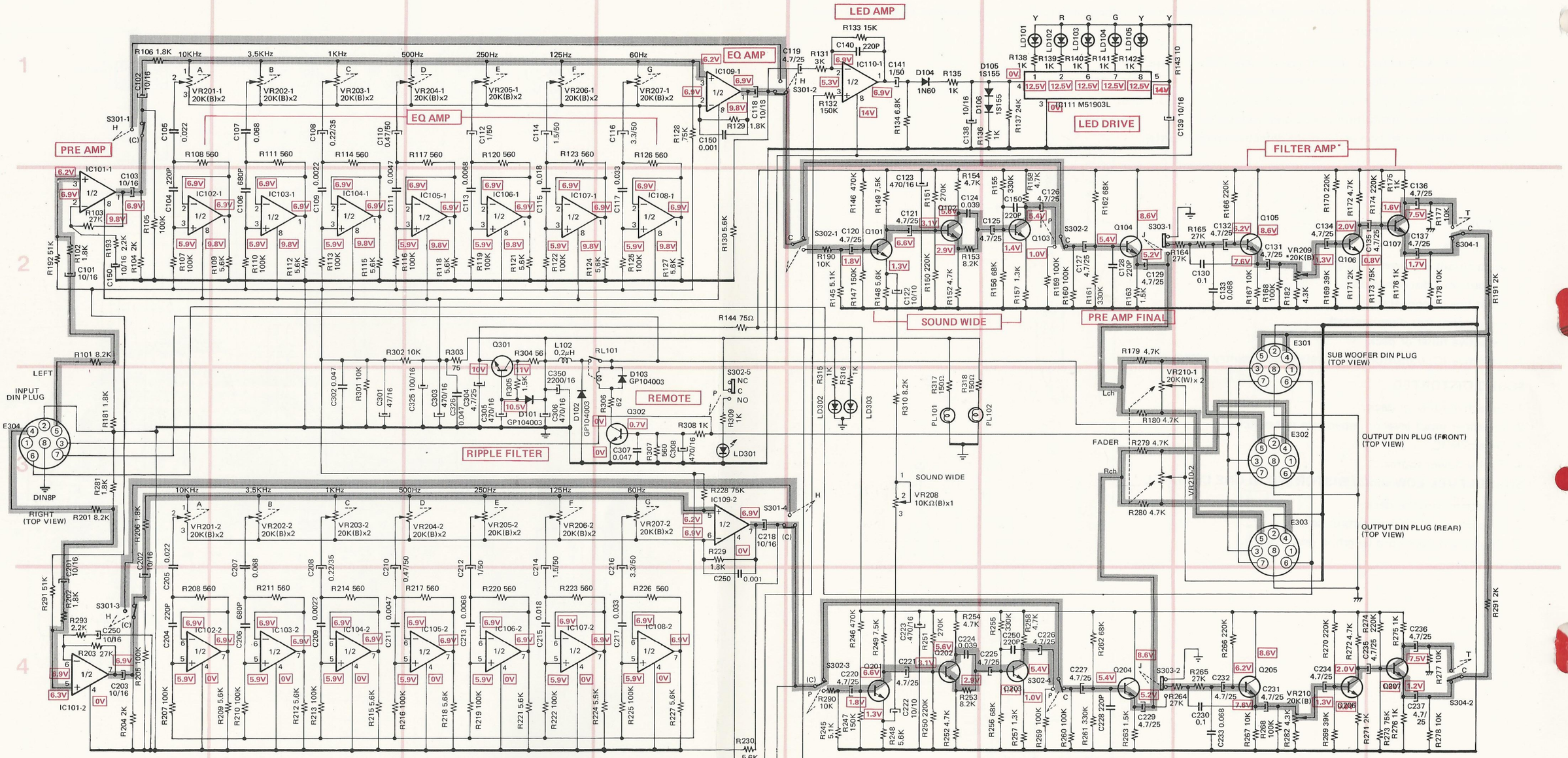

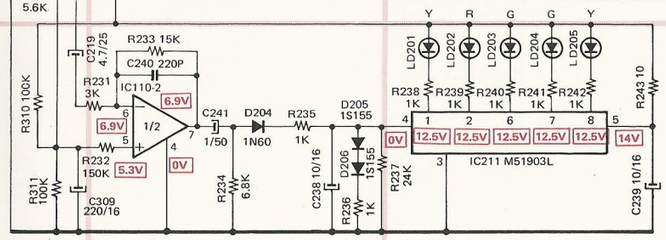

IC101~110 . . . . . M5218
Q101~106 . . . . . 2SC2320
Q201~206 . . . . . 2SC2320
Q104,107,204,207,301 . 2SD355
Q302 . . . . . 2SC1175

DIN PLUG PIN NO. DESCRIPTION

E304	E301	E302	E303
1 : –	1 : –	1 : –	1 : –
2 : GROUND	2 : GROUND	2 : GROUND	2 : GROUND
3 : REMOTE	3 : REMOTE	3 : REMOTE	3 : REMOTE
4 : INPUT (R CH)	4 : OUTPUT (SUB WOOFER)	4 : OUTPUT (FRONT R CH)	4 : OUTPUT (REAR R CH)
5 : INPUT (L CH)	5 : OUTPUT (SUB WOOFER)	5 : OUTPUT (FRONT L CH)	5 : OUTPUT (REAR L CH)
6 : +B SUPPLY	6 : +B SUPPLY	6 : +B SUPPLY	6 : +B SUPPLY
7 : +B	7 : +B	7 : +B	7 : +B
8 : GROUND	8 : GROUND	8 : GROUND	8 : GROUND

(NOTES)
1. ALL RESISTANCE VALUES ARE IN Ω K = 10^3 M = 10^6
2. ALL RESISTORS ARE RATED 1/4 OR 1/8 WATT ±5%
3. ALL CAPACITANCE VALUES IN uF P = 10^{-6} μF
4. ALL CAPACITORS ARE RATED AT 50 WV
5. NOMINAL VALUE MAY VARY

S301-1,2,3,4	DEFEAT SWITCH (OFF POSITION)
S302-1,2,3,4	SOUND WIDE SWITCH (OFF POSITION)
S302-5	SOUND WIDE LED SWITCH (OFF POSITION)
S303-1,2	SUB WOOFER ON-OFF SWITCH (OFF POSITION)
S304-1,2	PHASE SELECT SWITCH (REVERSE POSITION)

Electrical Parts List

Symbol No.	Part No.	Description
GRAPHIC EQUALIZER P.C. BOARD		
IC		
IC101	51E00269S01	M5218L
IC102	51E00269S01	M5218L
IC103	51E00269S01	M5218L
IC104	51E00269S01	M5218L
IC105	51E00269S01	M5218L
IC106	51E00269S01	M5218L
IC107	51E00269S01	M5218L
IC108	51E00269S01	M5218L
IC109	51E00269S01	M5218L
IC110	51E00269S01	M5218L
IC111	51S43690U01	M51903L
IC211	51S43690U01	M51903L
Transistors		
Q101	48E00272S01	2SC2320–E,F
Q102	48E00272S01	2SC2320–E,F
Q103	48E00272S01	2SC2320–E,F
Q104	48E00271S01	2SD355
Q105	48E00272S01	2SC2320–E,F
Q106	48E00272S01	2SC2320–E,F
Q107	48E00271S01	2SD355
Q201	48E00272S01	2SC2320–E,F
Q202	48E00272S01	2SC2320–E,F
Q203	48E00272S01	2SC2320–E,F
Q204	48E00271S01	2SD355
Q205	48E00272S01	2SC2320–E,F
Q206	48E00272S01	2SC2320–E,F
Q207	48E00271S01	2SD355
Q301	48E00271S01	2SD355
Q302	48S44656G01	2SC1175E
Diodes		
D101	48E00376S01	GP104003
D102	48E00376S01	GP104003
D103	48E00376S01	GP104003
D104	48B41768G02	1N60
D105	48S134816	1S1555
D106	48S134816	1S1555
D204	48B41768G02	1N60
D205	48S134816	1S1555
D206	48S134816	1S1555
Coil		
L102	25E00256S01	Coil, Choke 0.2 mH
Capacitors		
C101	23D44333G08	Electrolytic 10 μF/16V
C102	23D44333G08	Electrolytic 10 μF/16V
C103	23D44333G08	Electrolytic 10 μF/16V
C104	21C40133G09	Ceramic 220 pF/50V
C105	8C44833J17	Mylar 0.022 μF/50V
C106	21C40133G09	Ceramic 680 pF/50V
C107	8C44833J23	Mylar 0.068 μF/50V
C108	23T43247F02	Electrolytic 0.47 μF/50V
C109	8C44833J05	Mylar 0.0022 μF/50V
C110	23T40475U04	Electrolytic 0.47 μF/50V
C111	8C44833J09	Mylar 0.0047 μF/50V
C112	23D44333G01	Electrolytic 1 μF/50V
C113	8C44833J11	Mylar 0.0068 μF/50V
C114	23E00239S05	Electrolytic 1.5 μF/50V
C115	8C44833J16	Mylar 0.018 μF/50V
C116	23S41198U07	Electrolytic 3.3 μF/50V
C117	8C44833J19	Mylar 0.033 μF/50V
C118	23D44333G08	Electrolytic 10 μF/16V
C119	23D44333G05	Electrolytic 4.7 μF/25V
C120	23D44333G01	Electrolytic 1 μF/50V
C121	23D44333G05	Electrolytic 4.7 μF/25V
C122	23D44333G08	Electrolytic 10 μF/16V
C123	23B44780P05	Electrolytic 470 μF/16V
C124	8C44833J20	Mylar 0.039 μF/50V
C125	23D44333G05	Electrolytic 4.7 μF/25V
C126	23D44333G01	Electrolytic 1 μF/50V
C127	23D44333G01	Electrolytic 1 μF/50V
C128	21C40133G09	Ceramic 220 pF/50V
C129	23D44333G05	Electrolytic 4.7 μF/25V
C130	8C44833J25	Mylar 0.1 μF/50V
C131	23D44333G05	Electrolytic 4.7 μF/25V
C132	23D44333G05	Electrolytic 4.7 μF/25V
C133	8C44833J23	Mylar 0.068 μF/50V

Symbol No.	Part No.	Description
C134	23D44333G05	Electrolytic 4.7 μF/25V
C135	23D44333G05	Electrolytic 4.7 μF/25V
C136	23D44333G05	Electrolytic 4.7 μF/25V
C137	23D44333G05	Electrolytic 4.7 μF/25V
C138	23D44333G08	Electrolytic 10 μF/16V
C139	23D44333G08	Electrolytic 10 μF/16V
C140	21C40133G09	Ceramic 220 pF/50V
C141	23D44333G01	Electrolytic 1 μF/50V
C150	8C44833J01	Mylar 0.001 μF/50V
C151	23D44333G08	Electrolytic 10 μF/16V
C201	23D44333G08	Electrolytic 10 μF/16V
C202	23D44333G08	Electrolytic 10 μF/16V
C203	23D44333G08	Electrolytic 10 μF/16V
C204	21C40133G09	Ceramic 220 pF/50V
C205	8C44833J17	Mylar 0.022 μF/50V
C206	21C40133G09	Ceramic 680 pF/50V
C207	8C44833J23	Mylar 0.068 μF/50V
C208	23T43247F02	Electrolytic 0.47 μF/50V
C209	8C44833J05	Mylar 0.0022 μF/50V
C210	23T40475U04	Electrolytic 0.47 μF/50V
C211	8C44833J09	Mylar 0.0047 μF/50V
C212	23D44333G01	Electrolytic 1 μF/50V
C213	8C44833J11	Mylar 0.0068 μF/50V
C214	23E00239S05	Electrolytic 1.5 μF/50V
C215	8C44833J16	Mylar 0.018 μF/50V
C216	23S41198U07	Electrolytic 3.3 μF/50V
C217	8C44833J19	Mylar 0.033 μF/50V
C218	23D44333G08	Electrolytic 10 μF/16V
C219	23D44333G05	Electrolytic 4.7 μF/25V
C220	23D44333G01	Electrolytic 1 μF/50V
C221	23D44333G05	Electrolytic 4.7 μF/25V
C222	23D44333G08	Electrolytic 10 μF/16V
C223	23B44780P05	Electrolytic 470 μF/16V
C224	8C44833J20	Mylar 0.039 μF/50V
C225	23D44333G05	Electrolytic 4.7 μF/25V
C226	23D44333G01	Electrolytic 1 μF/50V
C227	23D44333G01	Electrolytic 1 μF/50V
C228	21C40133G09	Ceramic 220 pF/50V
C229	23D44333G05	Electrolytic 4.7 μF/25V
C230	8C44833J25	Mylar 0.1 μF/50V
C231	23D44333G05	Electrolytic 4.7 μF/25V
C232	23D44333G05	Electrolytic 4.7 μF/25V
C232	8C44833J23	Mylar 0.068 μF/50V
C234	23D44333G05	Electrolytic 4.7 μF/25V
C235	23D44333G05	Electrolytic 4.7 μF/25V

Symbol No.	Part No.	Description
C236	23D44333G05	Electrolytic 4.7 μF/25V
C237	23D44333G05	Electrolytic 4.7 μF/25V
C238	23D44333G08	Electrolytic 10 μF/16V
C239	23D44333G08	Electrolytic 10 μF/16V
C240	21C40133G09	Ceramic 220 pF/50V
C241	23D44333G01	Electrolytic 1 μF/50V
C250	8C44833J01	Mylar 0.001 μF/50V
C251	23D44333G08	Electrolytic 10 μF/16V
C301	23D41198U27	Electrolytic 47 μF/16V
C302	8C44833J21	Mylar 0.047 μF/50V
C303	23B44780P05	Electrolytic 470 μF/16V
C304	23D44333G05	Electrolytic 4.7 μF/25V
C305	23B44780P05	Electrolytic 470 μF/16V
C306	23B44780P05	Electrolytic 470 μF/16V
C307	8C44833J21	Mylar 0.047 μF/50V
C308	23B44780P05	Electrolytic 470 μF/16V
C309	23D44333G37	Electrolytic 220 μF/16V
C326	8C44833J21	Mylar 0.047 μF/50V
C350	23S00239S04	Electrolytic 2200 μF/16V

Resistors (All resistors are carbon film, ¼W, ±5% unless otherwise noted)

R101	6S41801P43	8.2K ohm
R102	6S41801P35	1.8K ohm
R103	6S41801P49	27K ohm
R104	6S40107T72	2K ohm
R105	6S41801P56	100K ohm
R106	6S41801P35	1.8K ohm
R107	6S41801P56	100K ohm
R108	6S41801P29	560 ohm
R109	6S41801P40	4.7K ohm
R110	6S41801P56	100K ohm
R111	6S41801P29	560 ohm
R112	6S41801P41	5.6K ohm
R113	6S41801P56	100K ohm
R114	6S41801P29	560 ohm
R115	6S41801P41	5.6K ohm
R116	6S41801P56	100K ohm
R117	6S41801P29	560 ohm
R118	6S41801P41	5.6K ohm
R119	6S41801P56	100K ohm
R120	6S41801P29	560 ohm

Symbol No.	Part No.	Description
R121	6S41801P41	5.6K ohm
R122	6S41801P56	100K ohm
R123	6S41801P29	560 ohm
R124	6S41801P41	5.6K ohm
R125	6S41801P56	100K ohm
R126	6S41801P29	560 ohm
R127	6S41801P41	5.6K ohm
R128	6S40108T11	75K ohm
R129	6S41801P35	1.8K ohm
R130	6S41801P41	5.6K ohm
R131	6S40107T76	3K ohm
R132	6S41801P58	150K ohm
R133	6S41801P46	15K ohm
R134	6S41801P42	6.8K ohm
R135	6S41801P32	1K ohm
R136	6S41801P32	1K ohm
R137	6S40107T98	24K ohm
R138	6S41801P32	1K ohm
R139	6S41801P32	1K ohm
R140	6S41801P32	1K ohm
R141	6S41801P32	1K ohm
R142	6S41801P32	1K ohm
R143	6S41801P08	10 ohm
R144	6S40107T38	75 ohm
R145	6S40107T82	5.1K ohm
R146	6S41802P61	270K ohm
R147	6S41801P58	150K ohm
R148	6S41801P41	5.6K ohm
R149	6S44593P86	7.5K ohm
R150	6S41801P60	220K ohm
R151	6S41802P61	270K ohm
R152	6S41801P40	4.7K ohm
R153	6S41801P43	8.2K ohm
R154	6S41801P40	4.7K ohm
R155	6S41801P62	330K ohm
R156	6S41801P54	68K ohm
R157	6S40107T68	1.3K ohm
R158	6S41801P40	4.7K ohm
R159	6S41801P56	100K ohm
R160	6S41801P56	100K ohm
R161	6S41801P62	330K ohm
R162	6S41801P54	68K ohm
R163	6S41801P32	1K ohm
R164	6S41801P49	27K ohm
R165	6S41801P49	27K ohm

Symbol No.	Part No.	Description
R166	6S41801P60	220K ohm
R167	6S41801P44	10K ohm
R168	6S41801P56	100K ohm
R169	6S41801P51	39K ohm
R170	6S41801P60	220K ohm
R171	6S40107T72	2K ohm
R172	6S41801P40	4.7K ohm
R173	6S40108T11	75K ohm
R174	6S41801P60	220K ohm
R175	6S41801P29	560 ohm
R176	6S41801P29	560 ohm
R177	6S41801P44	10K ohm
R178	6S41801P44	10K ohm
R179	6S41801P40	4.7K ohm
R180	6S41801P40	4.7K ohm
R181	6S41801P35	1.8K ohm
R182	6S40107T80	4.3K ohm
R190	6S41801P44	10K ohm
R191	6S40107T72	2K ohm
R192	6S40108T07	51K ohm
R193	6S41801P36	2.2K ohm
R201	6S41801P43	8.2K ohm
R202	6S41801P35	1.8K ohm
R203	6S41801P49	27K ohm
R204	6S40107T72	2K ohm
R205	6S41801P56	100K ohm
R206	6S41801P35	1.8K ohm
R207	6S41801P56	100K ohm
R208	6S41801P29	560 ohm
R209	6S41801P41	5.6K ohm
R210	6S41801P56	100K ohm
R211	6S41801P29	560 ohm
R212	6S41801P41	5.6K ohm
R213	6S41801P56	100K ohm
R214	6S41801P29	560 ohm
R215	6S41801P41	5.6K ohm
R216	6S41801P56	100K ohm
R217	6S41801P29	560 ohm
R218	6S41801P41	5.6K ohm
R219	6S41801P56	100K ohm
R220	6S41801P29	560 ohm
R221	6S41801P41	5.6K ohm
R222	6S41801P56	100K ohm
R223	6S41801P29	560 ohm
R224	6S41801P41	5.6K ohm

Symbol No.	Part No.	Description
R225	6S41801P56	100K ohm
R226	6S41801P29	560 ohm
R227	6S41801P41	5.6K ohm
R228	6S40108T11	75K ohm
R229	6S41801P35	1.8K ohm
R230	6S41801P41	5.6K ohm
R231	6S40107T76	3K ohm
R232	6S41801P58	150K ohm
R233	6S41801P46	15K ohm
R234	6S41801P42	6.8K ohm
R235	6S41801P32	1K ohm
R236	6S41801P32	1K ohm
R237	6S40107T98	24K ohm
R238	6S41801P32	1K ohm
R239	6S41801P32	1K ohm
R240	6S41801P32	1K ohm
R241	6S41801P32	1K ohm
R242	6S41801P32	1K ohm
R243	6S41802P08	10 ohm
R244	–	
R245	6S40107T82	5.1K ohm
R246	6S41801P64	470K ohm
R247	6S41801P58	150K ohm
R248	6S41801P41	5.6K ohm
R249	6S40107T86	7.5K ohm
R250	6S41801P60	220K ohm
R251	6S41801P61	270K ohm
R252	6S41801P40	4.7K ohm
R253	6S41801P43	8.2K ohm
R254	6S41801P40	4.7K ohm
R255	6S41801P62	330K ohm
R256	6S41801P54	68K ohm
R257	6S40107T68	1.3K ohm
R258	6S41801P40	4.7K ohm
R259	6S41801P56	100K ohm
R260	6S41801P56	100K ohm
R261	6S41801P62	330K ohm
R262	6S41801P54	68K ohm
R263	6S41801P34	1.5K ohm
R264	6S41801P49	27K ohm
R265	6S41801P49	27K ohm
R266	6S41801P60	220K ohm
R267	6S41801P44	10K ohm
R268	6S41801P56	100K ohm
R269	6S41801P51	39K ohm

Symbol No.	Part No.	Description
R270	6S41801P60	220K ohm
R271	6S40107T72	2K ohm
R272	6S41801P40	4.7K ohm
R273	6S40108T11	75K ohm
R274	6S41801P60	220K ohm
R275	6S41801P32	1K ohm
R276	6S41801P32	1K ohm
R277	6S41801P44	10K ohm
R278	6S41801P44	10K ohm
R279	6S41801P40	4.7K ohm
R280	6S41801P40	4.7K ohm
R281	6S41801P35	1.8K ohm
R282	6S40107T80	4.3K ohm
R290	6S41801P44	10K ohm
R291	6S40107T72	2K ohm
R292	6S44594P07	51K ohm
R293	6S41801P36	2.2K ohm
R301	6S41801P44	10K ohm
R302	6S41801P44	10K ohm
R303	6S40107T38	75 ohm
R304	6S41801P17	56 ohm
R305	6S41801P34	1.5K ohm
R306	6S40107T36	62 ohm
R307	6S41801P29	560 ohm
R308	6S41801P32	1K ohm
R309	6S41801P32	1K ohm
R310	6S41801P56	100K ohm
R311	6S41801P56	100K ohm
Relay & Variable Resistors		
RL101	80T40631F01	Relay FBR-311D-009
VR209	18E00116S02	Variable Resistor 20K ohm
VR210	18E00116S02	Variable Resistor 20K ohm
VOLUME P.C. BOARD		
LEDs		
LD101	48E00277S01	GL-9HY2 (Yellow)
LD102	48T42674U02	GL-9PR2 (Red)
LD103	48E00276S01	GL-9PG51 (Green)
LD104	48E00276S01	GL-9PG51 (Green)
LD105	48E00277S01	GL-9HY2 (Yellow)

Symbol No.	Part No.	Description
LD201	48E00277S01	GL-9HY2 (Yellow)
LD202	48T42674U02	GL-9PR2 (Red)
LD203	48E00276S01	GL-9PG51 (Green)
LD204	48E00276S01	GL-9PG51 (Green)
LD205	48E00277S01	GL-9HY2 (Yellow)
LD301	48E00277S01	GL-9HY2 (Yellow)
Variable Resistors		
VR201	18E00243S02	Variable 20K ohm (B)x2
VR202	18E00243S02	Variable 20K ohm (B)x2
VR203	18E00243S02	Variable 20K ohm (B)x2
VR204	18E00243S02	Variable 20K ohm (B)x2
VR205	18E00243S02	Variable 20K ohm (B)x2
VR206	18E00243S02	Variable 20K ohm (B)x2
VR207	18E00243S02	Variable 20K ohm (B)x2
VR208	18E00268S01	Variable 10K ohm (B)x1
VR210	18E00243S03	Variable 20K ohm (W)x2
Resistors (All resistors are carbon film, ¼W, ±5% unless otherwise noted)		
R309	6S41802P32	1K ohm
R315	6S41802P32	1K ohm
R316	6S41802P32	1K ohm
R317	6E00215S05	150ohm – 1W
R318	6E00215S05	150ohm – 1W
Lamps		
PL301	65E00159S03	Pilot 6V–65mA
PL302	65E00159S03	Pilot 6V–65mA
MISCELLANEOUS		
S301	40E00264S01	Switch, Push 6-2, (WIDE)
S302	40E00263S01	Switch, Push 4-2, (DEF)
S303	40E00262S01	Switch, Slide 2-2 (Sub-Woofer)
S304	40E00262S01	Switch, Slide 2-2
E301	30E00198S06	DIN Cable 8P (Rear)
E302	30E00198S05	DIN Cable 8P (Front)
E303	30E00192S04	DIN Cable 8P (Sub-Woofer)
E304	30E00265S01	DIN Cable 8P (Input)

Semi-Conductor Lead Identifications

M5218L : IC101 ~ 110, 201 ~ 210

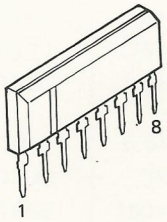

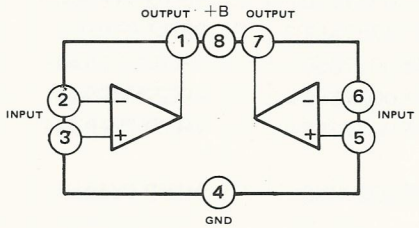

M51903L : IC111, 211

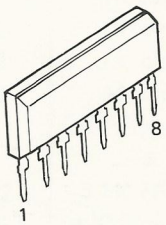

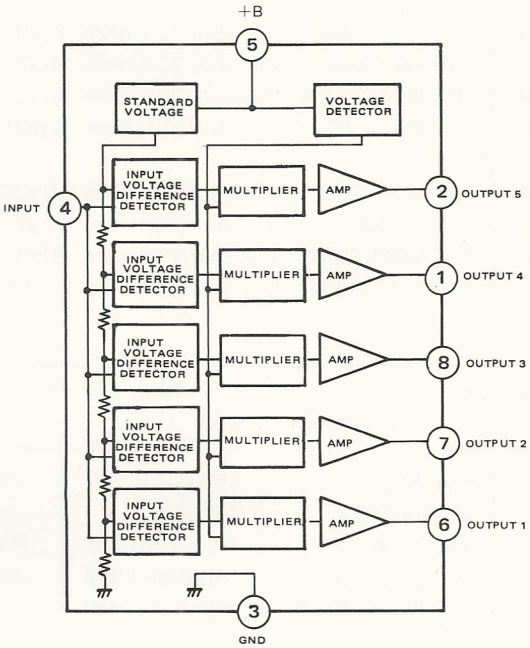

2SC2320 : Q101 ~ 103, 105, 106, Q201 ~ 203, 205, 206

2SD355 : Q104, 107, 204, 207, 301

2SC1175 : Q302

Parts Layout on P.C.Boards

VOLUME/LED P.C.BOARD

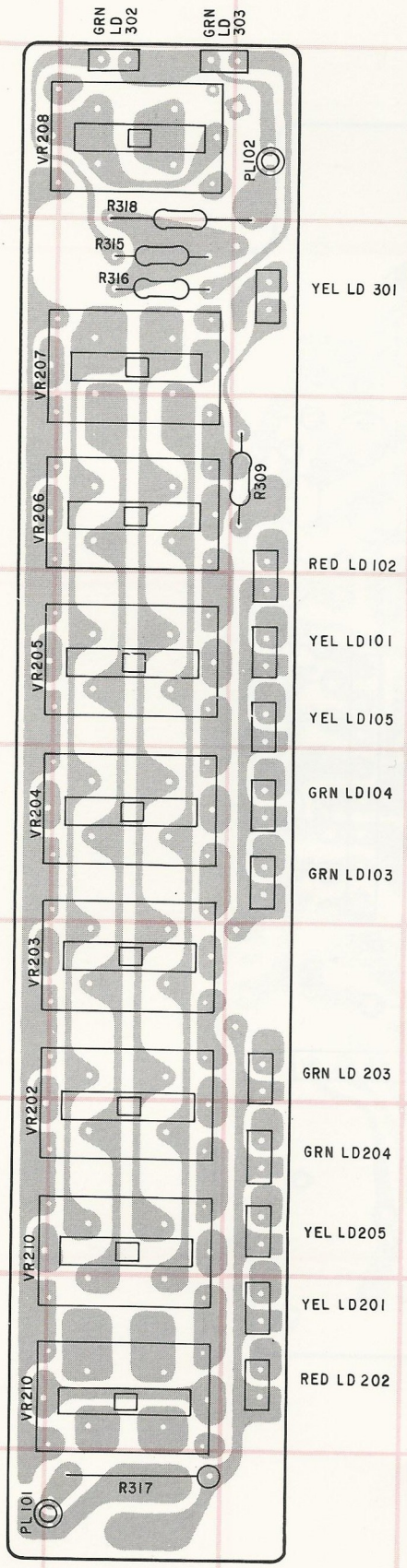

Top View

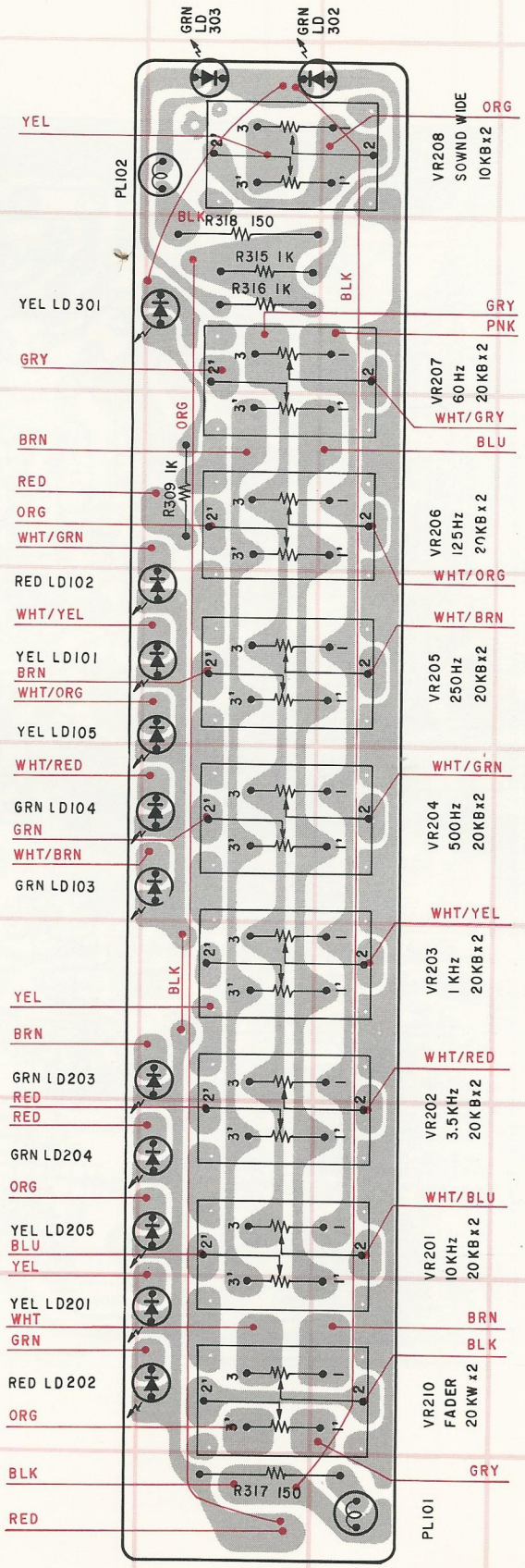

Bottom View

SWITCH P.C.BOARD

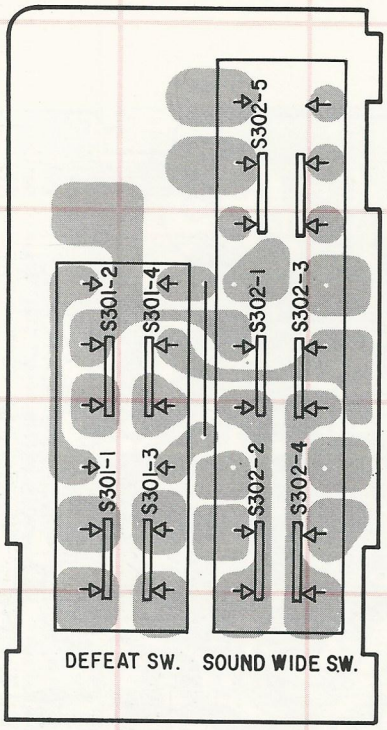

Top View

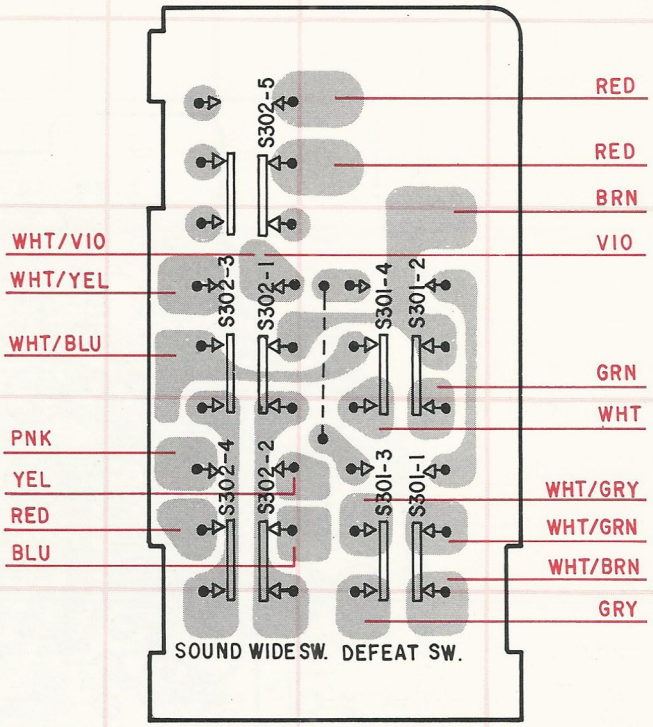

Bottom View

EQUALIZER P.C.BOARD

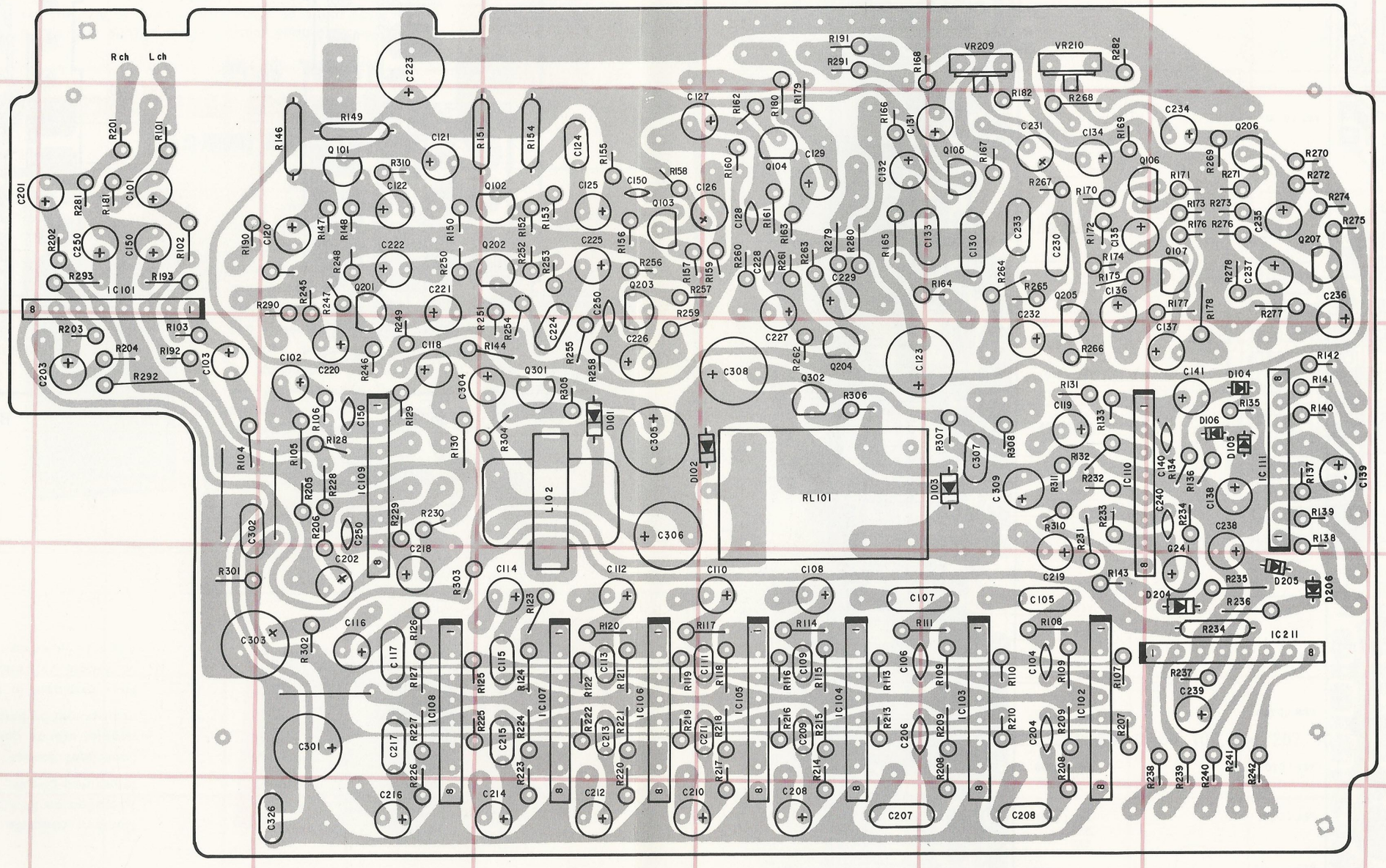

Top View

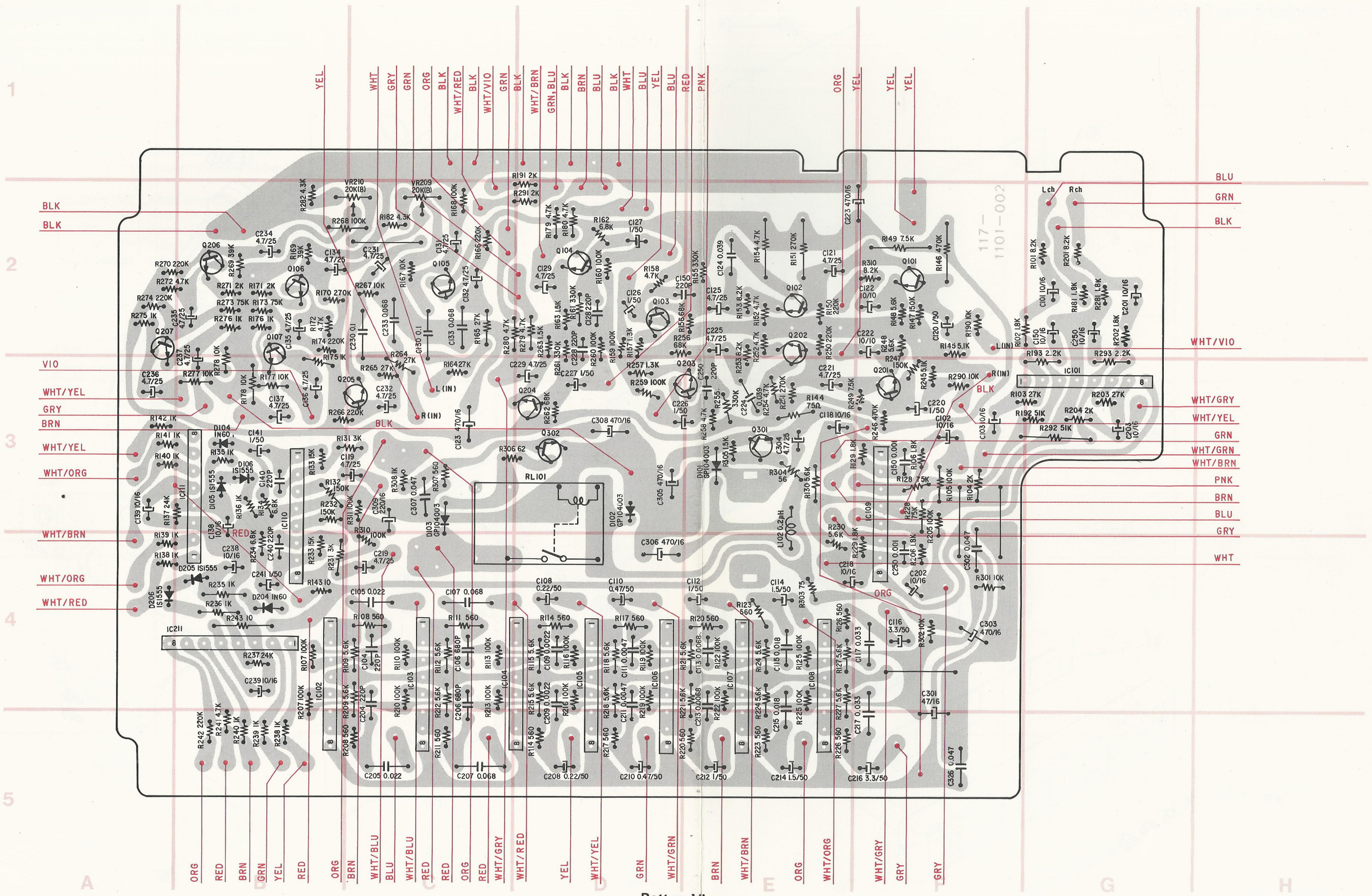
YEL
WHT
GRY
GRN
ORG
BLK
WHT/RED
BLK
WHT/VIO
GRN
BLK
WHT/BRN
GRN, BLU
BLK
BRN
BLU
BLK
WHT
BLU
YEL
BLU
RED
PNK
ORG
YEL
YEL
YEL
BLU
GRN
BLK
Lch
Rch
BLK
BLK
VIO
WHT/YEL
GRY
BRN
WHT/YEL
WHT/ORG
WHT/BRN
WHT/ORG
WHT/RED
WHT/VIO
WHT/GRY
WHT/YEL
GRN
WHT/GRN
WHT/BRN
PNK
BRN
BLU
GRY
WHT
L (IN)
R (IN)
L (IN)
R (IN)
BLK
RED
ORG
IC101
IC211
RL101
117-1101-002
ORG
RED
BRN
GRN
YEL
RED
ORG
BRN
WHT/BLU
BLU
WHT/BLU
RED
RED
ORG
RED
WHT/GRY
WHT/RED
YEL
WHT/YEL
GRN
WHT/GRN
BRN
WHT/BRN
ORG
WHT/ORG
WHT/GRY
GRY
GRY

Bottom View

Exploded View (Cabinet)

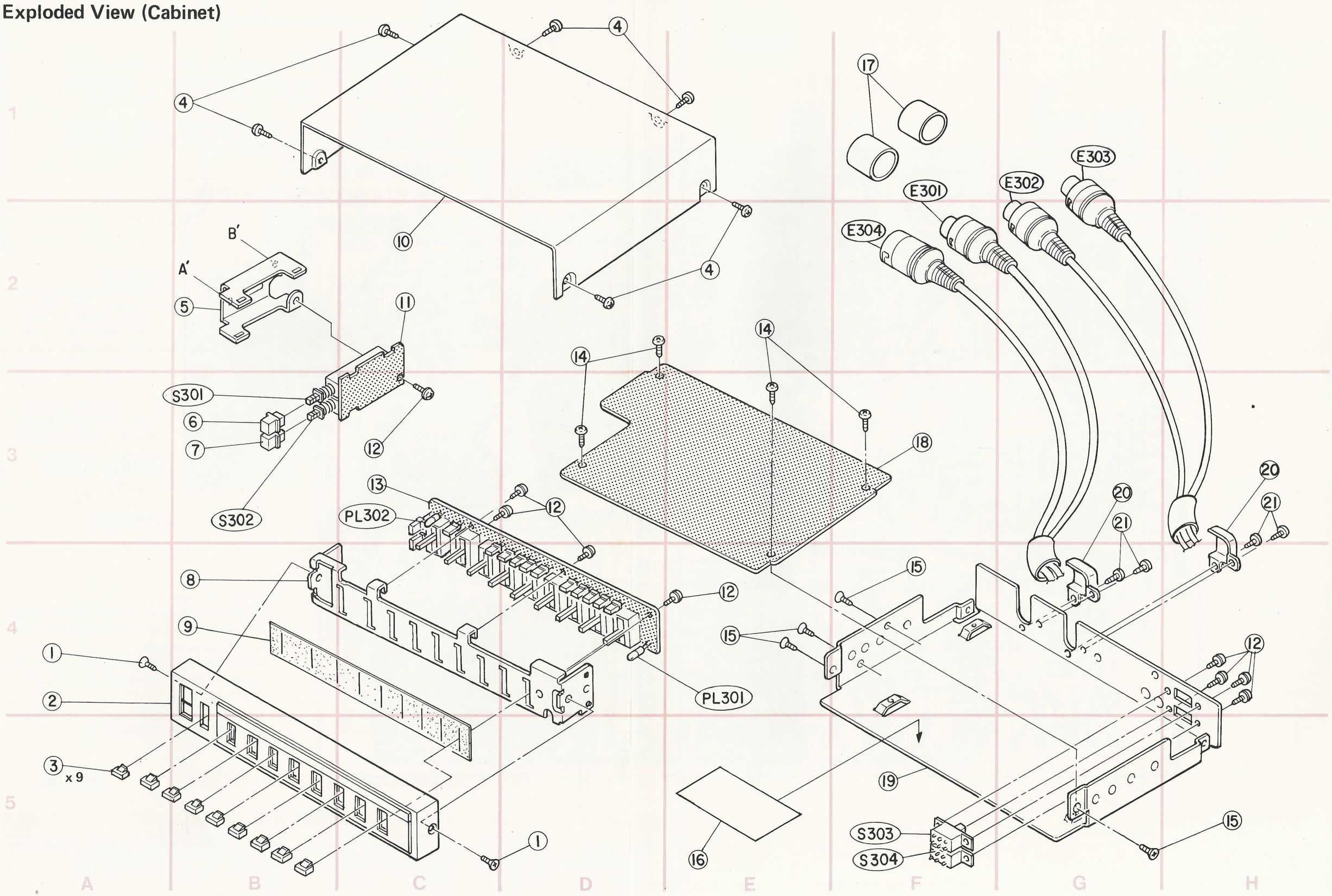

Cabinet Assembly Parts List

Note: The parts whose part number are, not enterd are not supplied.

Sym. No.	Index	Part No.	Description
1	4A,5D	3E00108S17	Screw, Machine (M2.6x5)
2	4A	13E00259S01	Assembly, Nosepiece
3	5A	36E00270S01	Knob, (EQ)
4		3E00108S05	Screw, Machine (M2.6x3)
5	2B	*	Bracket, Wide/Defeat Sw.
6	3B	36E00267S02	Knob, Sound Sw. (WIDE)
7	3B	36E00267S01	Knob, Defeat Sw. (DEF)
8	4B	*	Frame, Front
9	4B	*	Dust, Volume
10	2C	15E00258S01	Cover, Top
11	2C	84E00266S01	Panel, Switch
12		3E00109S07	Screw, w/Washer, Machine (M2x4)
13	3C	1E00261S01	Assembly, Volume LED Panel
14	2D,2E	3E00103S18	Screw, Machine (M2.6x4)
15		3E00108S16	Screw, Machine (M2.6x3)
16	5E	*	Insulator
17	1F	*	Cover, Dust
18	3F	1E00260S01	Assembly, Equalizer Panel
19	5F	*	Cover, Bottom
20	3G,3H	*	Bracket, Cord
21	3G,3H	3E00214S15	Screw, w/Washer (M3x6)

Packing Method View

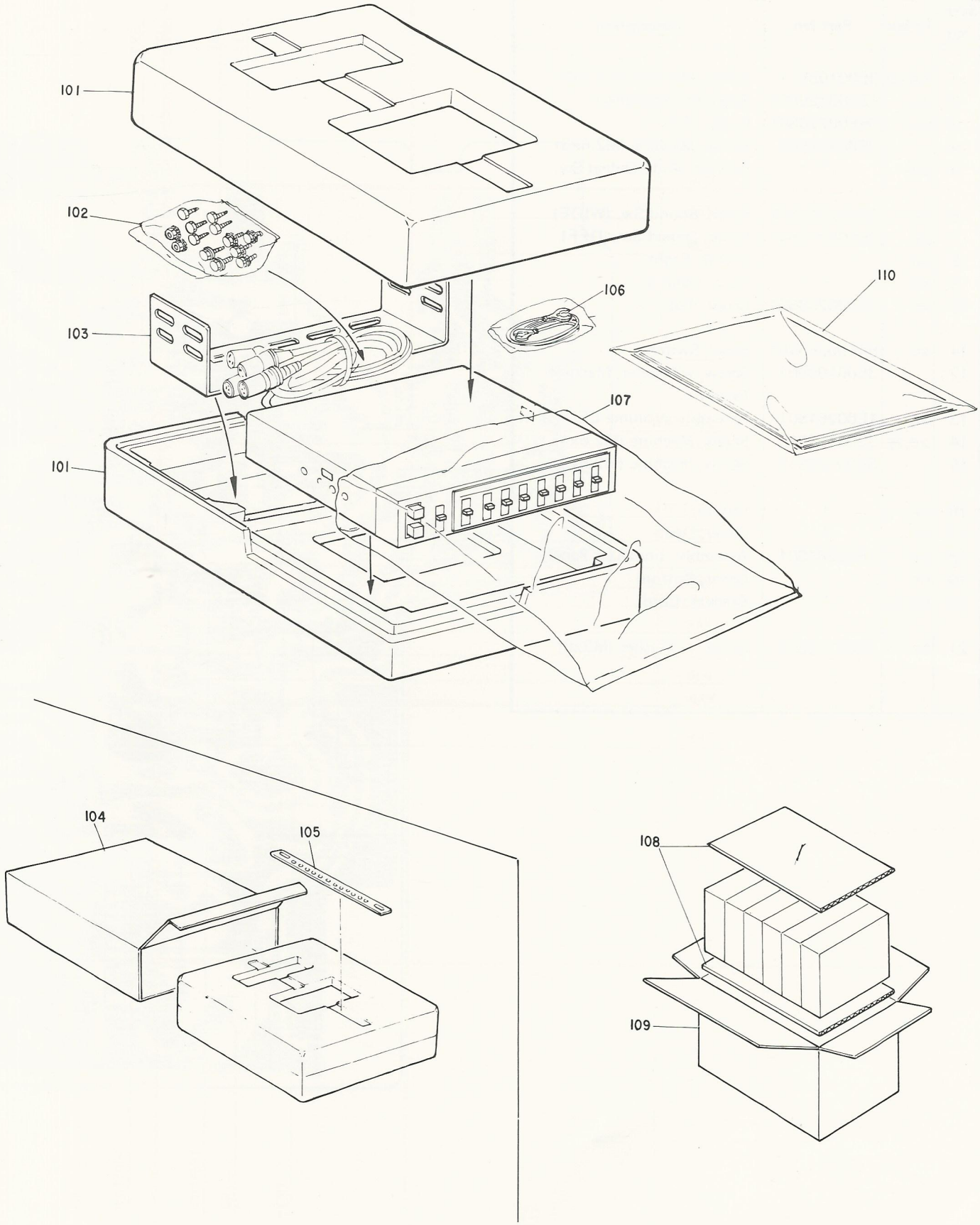

Packing Assembly Parts List

Note: The parts whose part number are, not enterd are not supplied.

Symbol No.	Part No.	Description
101	56E00275S01	Tray, Packing
102	1V00100S19	Assembly, Kit Installation
102-1	3B44963F01	Screw, Machine (M4x8)
102-2	3B44963F05	Screw, Machine (M5x8)
102-3	3B44963F02	Screw, Machine (M5x20)
102-4	3S40012G66	Screw, Tapping (M5x20)
102-5	2S40000G33	Nut, Hexagon (M5)
102-6	3S40012G45	Screw, Tapping (M5x10)
102-7	*	Sack, Polyethylene
103	7B52108F01	Bracket, Mounting
104	56E00274S01	Carton, Packing (IND.)
105	7E00096S01	Bracket, Strap Receiver
106	30E00273S01	Assembly, Ground Wire
107	56E00216S05	Sack, Polyethylene
108	*	Packing
109	*	Carton, Packing (MAS)
110	68P55888F19	Owners, Manual