DENNIS

ALPINE SERVICE MANUAL

Main Amplifier
With Pulse Regulated Power Supply

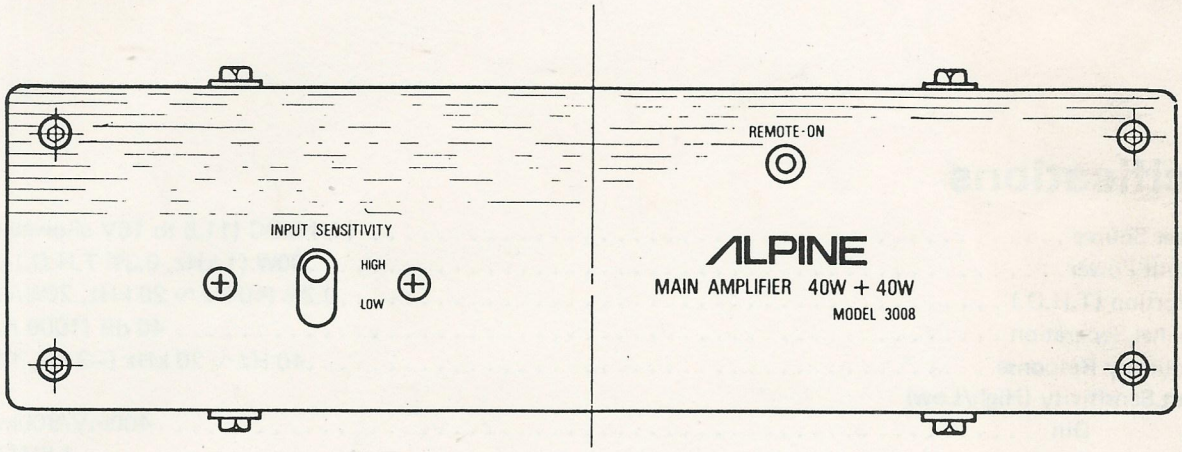

3008

Contents

Specifications 2
Parts Location and Disassembly Instructions . . . . . 3 to 4
Adjustment Procedure 5
Adjustment Location 6
Block Diagram 6
Parts Layout on P.C. Board . . . . . 7 to 8
Wiring Diagram . . . . . 9 to 10
Schematic Diagram . . . . . 11 to 12
Exploded View . . . . . 13 to 14
Semiconductors Lead Identifications 15
Packing Method 15
Parts List . . . . . 16 to 18

Specifications

Power Source . . . . . 14.4 VDC (11.5 to 16V allowable)
Output Power . . . . . 30W (1 kHz, 0.3% T.H.D.)/ch
Distortion (T.H.D.) . . . . . 0.2% (40 Hz ∿ 20 kHz, 20W/ch)
Channel Separation . . . . . 40 dB (1000 Hz)
Frequency Response . . . . . 40 Hz ∿ 20 kHz (–3 dB, 1W)
Input Sensitivity (High/Low)
- Din 400mV/800mV
- Speaker 1.5V/3V

Input Impedance
- Din . . . . . 15k ohm
- Speaker . . . . . 120 ohm

Signal to Noise Ratio . . . . . 58 dB (Din Input)
Load Impedance . . . . . 4 ohm
Dimensions . . . . . 180(W) x 50(H) x 151.2(D)mm
Semi-Conductors . . . . . 2 Dual Transistors, 14 Transistors, 21 D22 Diodes, 1 Thyristor, 2 Zener Diodes, 1 IC, 1 Photo Coupler
Weight . . . . . 1.8 kg

Parts Location and Disassembly Instructions

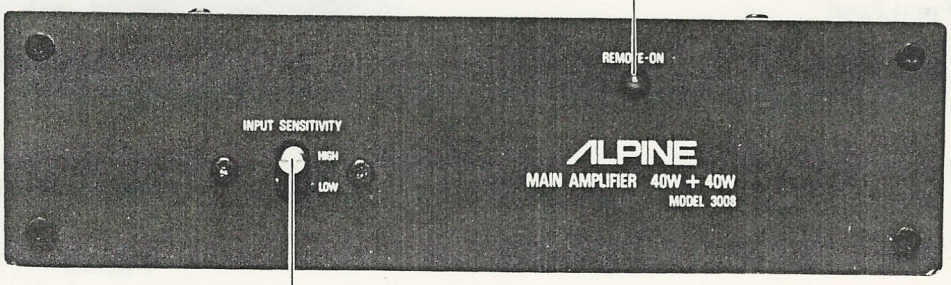

Figure 1

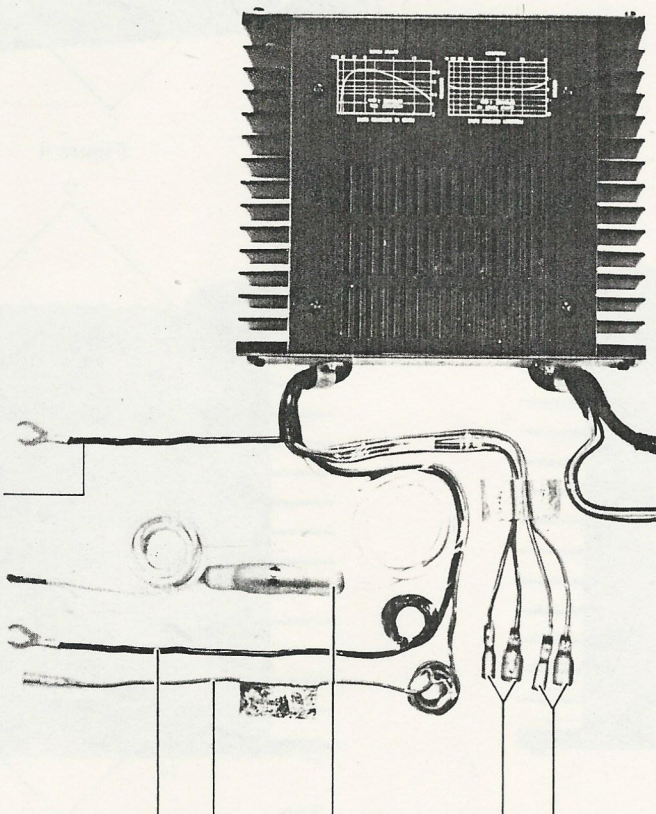

Figure 2

1. **Removal of Top and Bottom Covers**
   (1) Remove four screws marked " ○ " as shown in Figure 5, and the top cover can be removed.
   (2) Remove four screws marked " ● " as shown in Figure 6, and the bottom cover can be removed.

2. **Removal of Front Panel**
   (1) Remove six screws marked " ■ " as shown in Figure 3.
   (2) Take care of lead wires with a power indicator.

3. **Removal of Rear Panel**
   (1) Remove six screws marked " □ " as shown in Figure 4, and the rear panel can be removed.

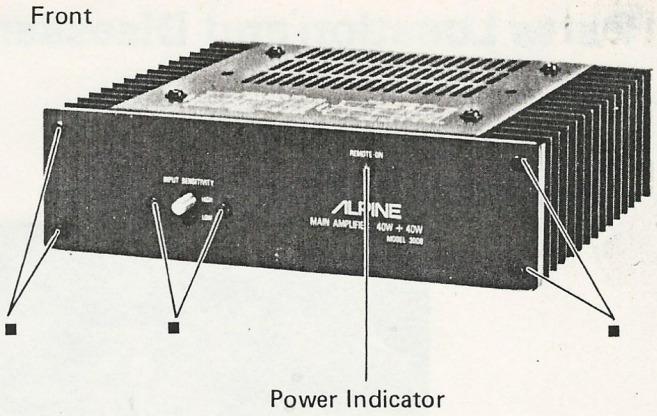

Figure 3

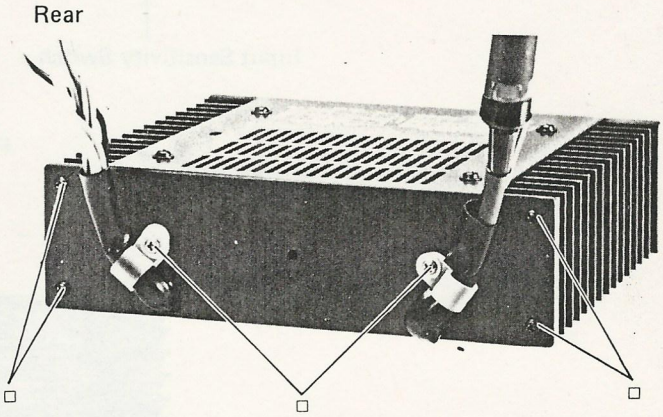

Figure 4

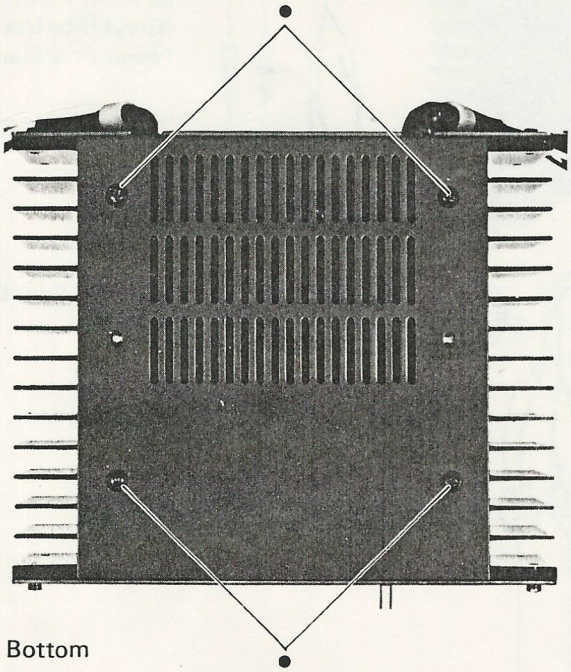

Figure 6

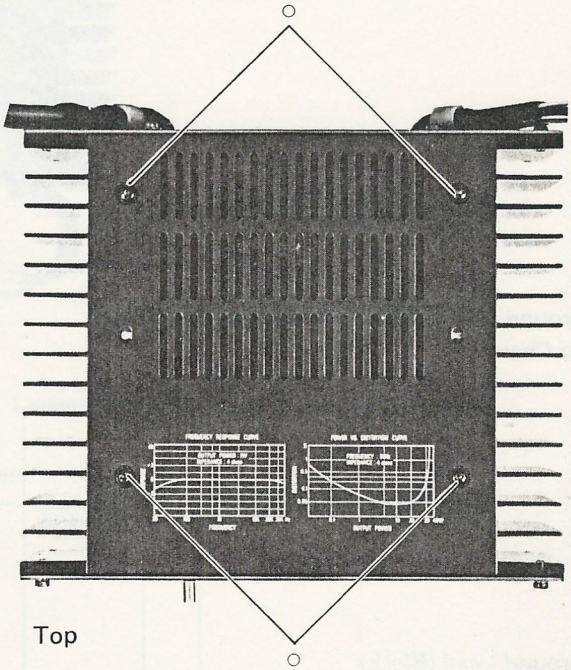

Figure 5

Adjustment Procedures

1. Idling Adjustment

- **Connection Instruction**

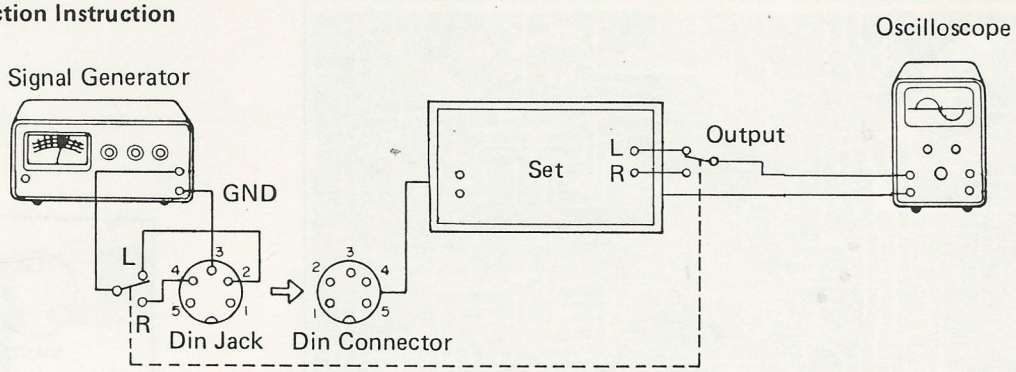

Figure 7

- **Procedure**
  (1) Set the D.C. supply voltage to 14.4 volts.
  (2) Set the signal input level to 20 ∿ 300 mili-volts.
  (3) Take off the crossover distortion of output by VR101 (L ch.) and VR102 (R ch.), observing oscilloscope. (See Figure 8)

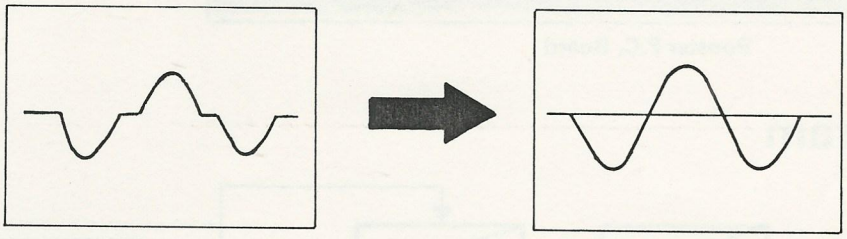

Figure 8

2. Protector Operating Point Adjustment

- **Connection Instruction**

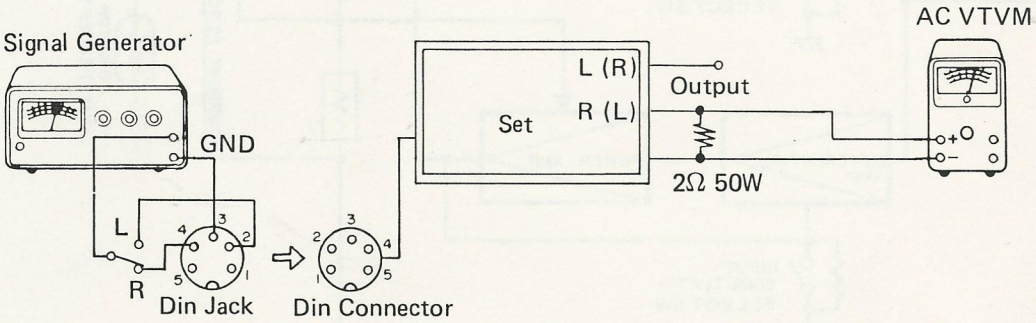

Figure 9

- **Procedure**
  (1) Set the D.C. supply voltage to 14.4 volts.
  (2) Connect 2 ohms load to one channel (Another channel is open.)
  (3) Increase the input signal level, and adjust VR103 to operate the protector when output becomes 6.75 volts. (6.75 volts in 2 ohms load is equal to 45 watts in open channel.)

Adjustment Locations

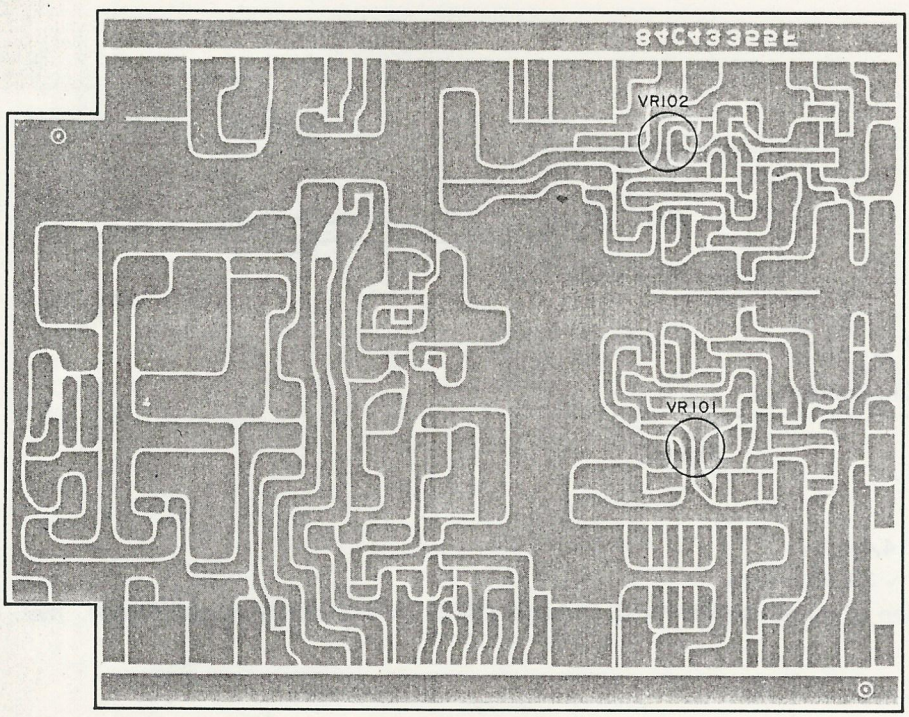

Booster P.C. Board

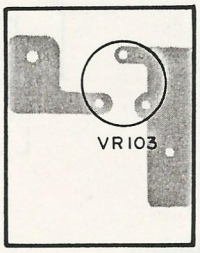

Volume P.C. Board

Block Diagram

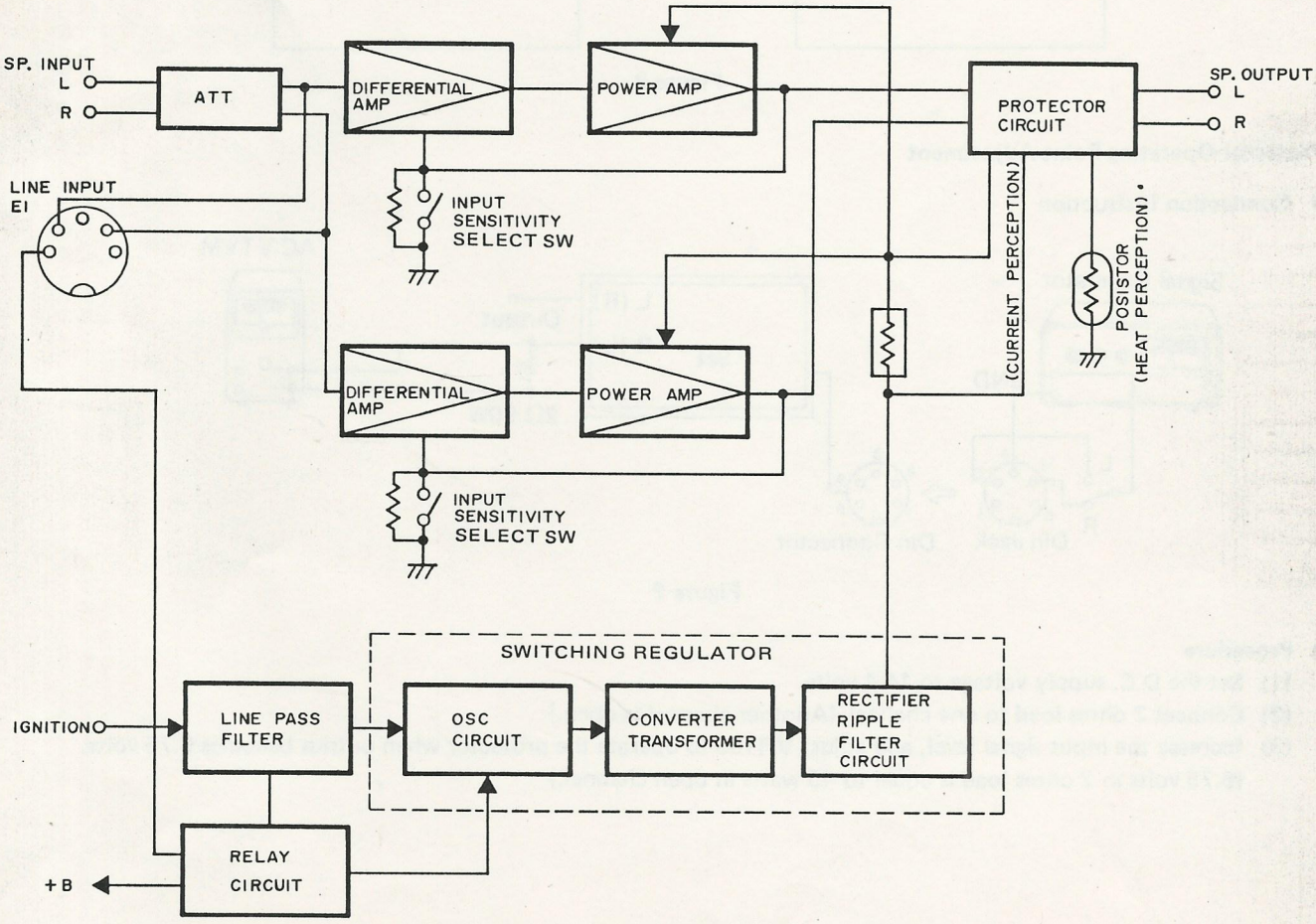

Wiring Diagram

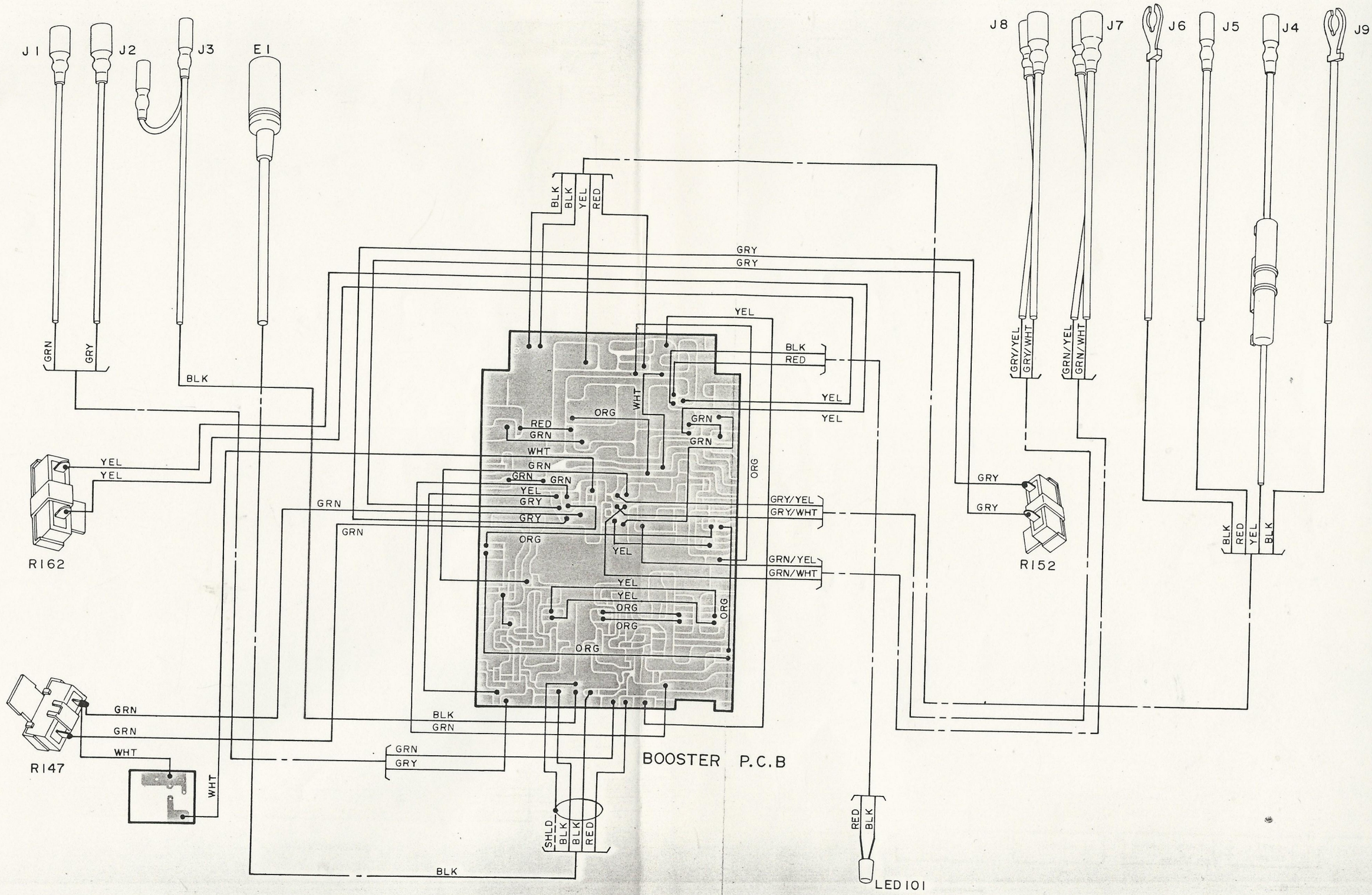

Parts Layout on P.C. Board

Booster P.C.Board

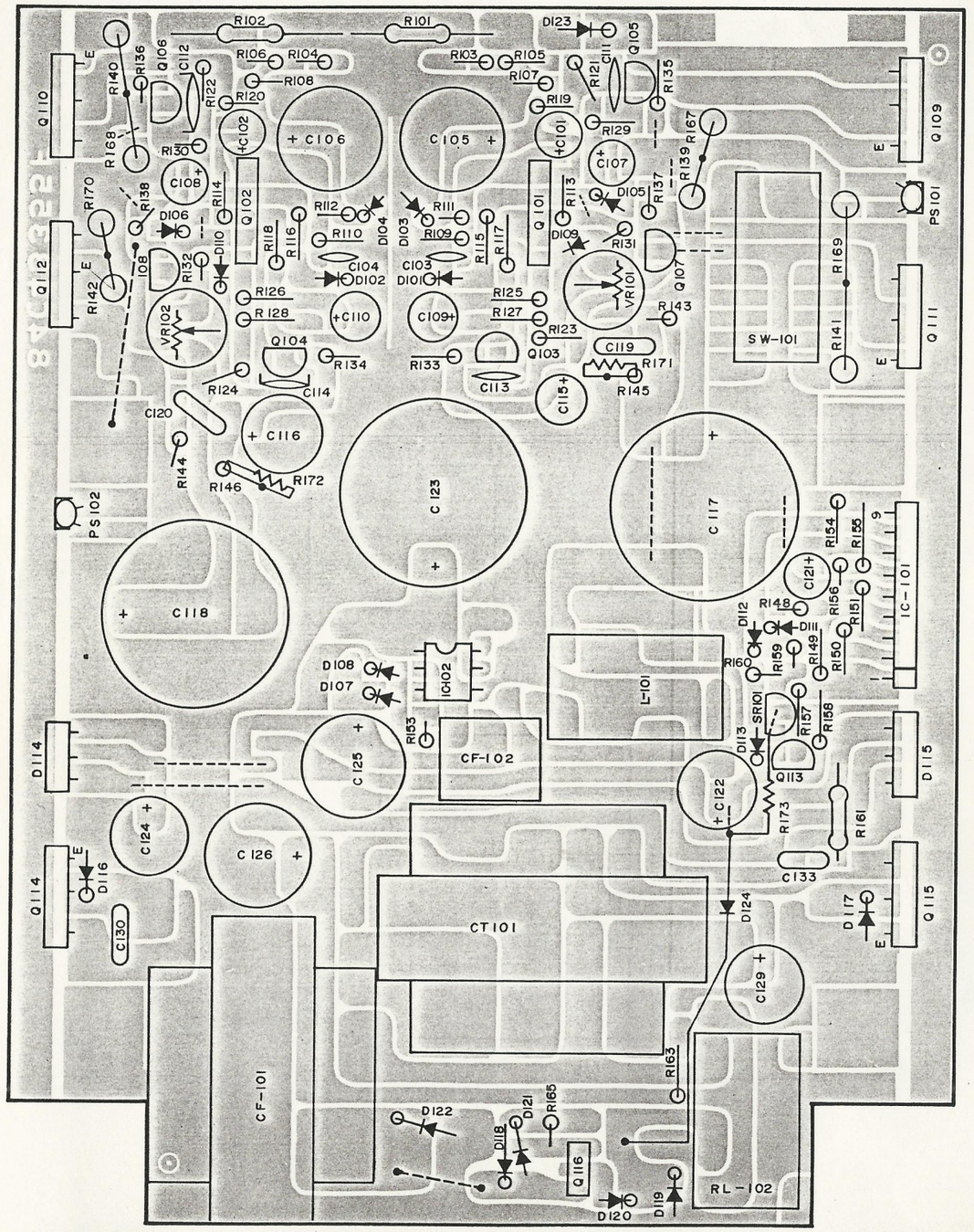

Top View

Volume P.C.Board

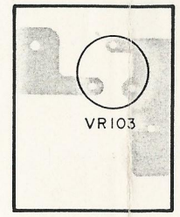

Top View.

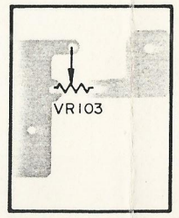

Bottom View

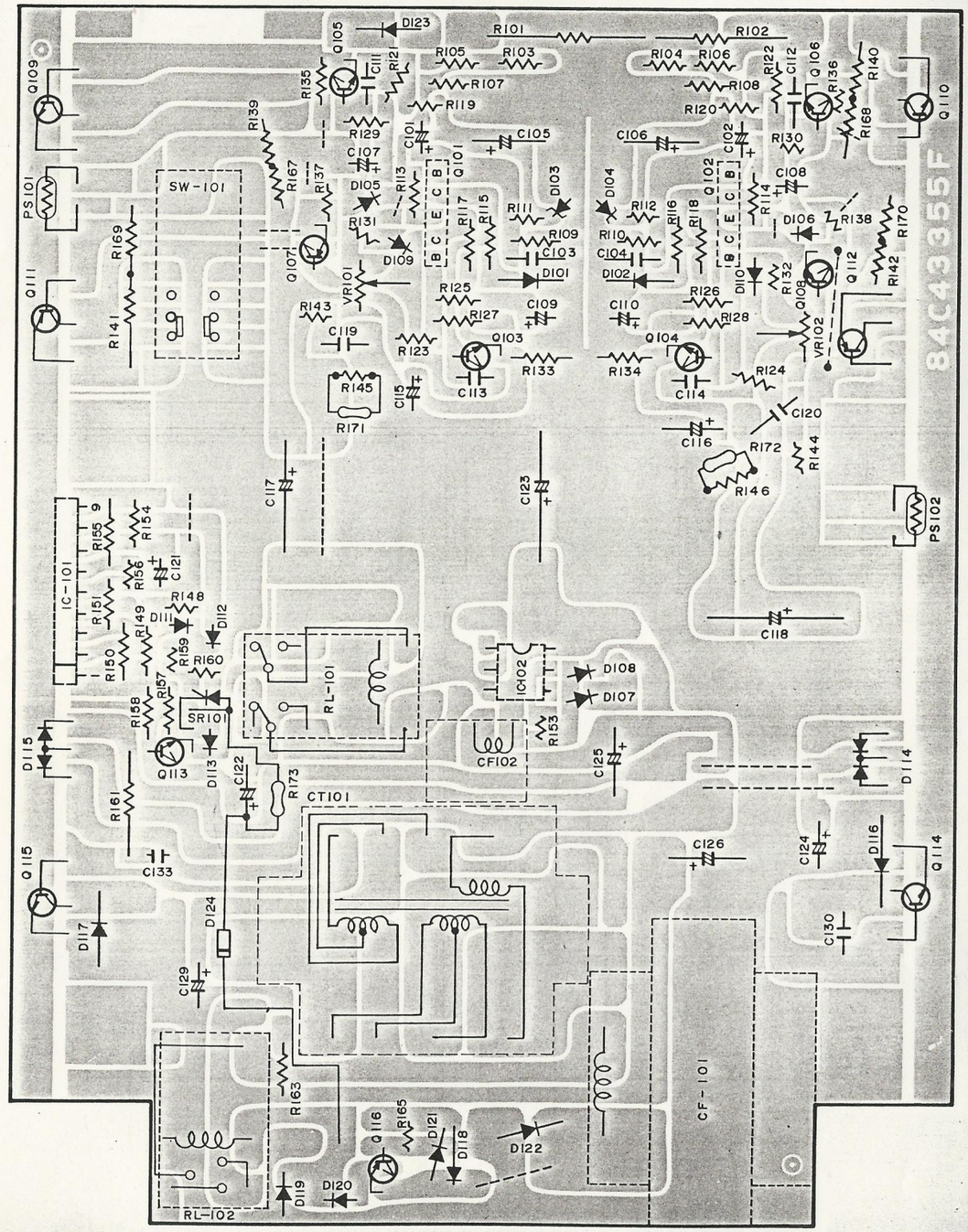

Bottom View

Schematic Diagram

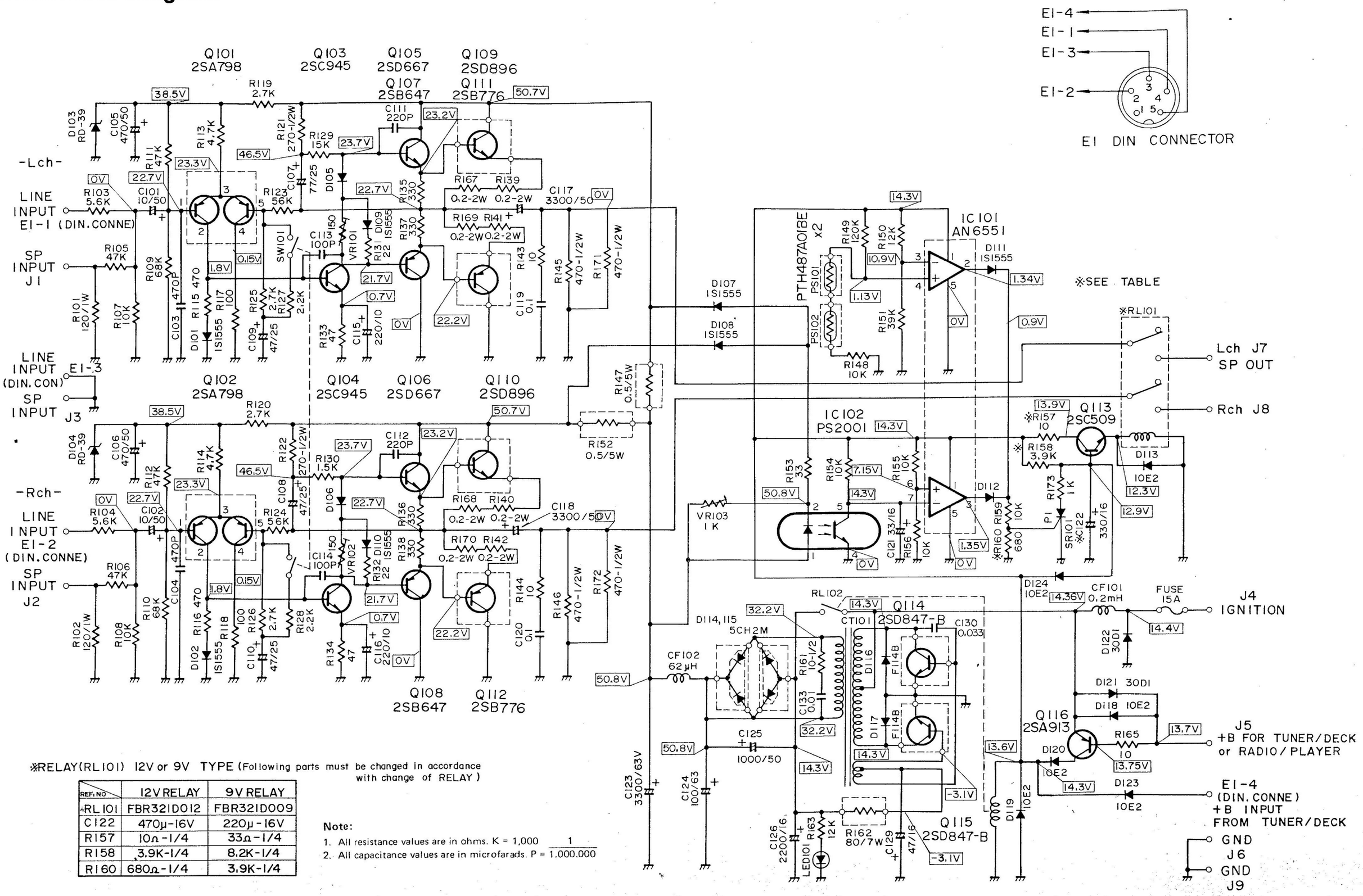

※RELAY(RL101) 12V or 9V TYPE (Following parts must be changed in accordance with change of RELAY)

REF.NO	12V RELAY	9V RELAY
※RL101	FBR321D012	FBR321D009
C122	470μ-16V	220μ-16V
R157	10Ω-1/4	33Ω-1/4
R158	3.9K-1/4	8.2K-1/4
R160	680Ω-1/4	3.9K-1/4

Note:

1. All resistance values are in ohms. K = 1,000
2. All capacitance values are in microfarads. P = 1,000,000 / 1

Exploded View (General)

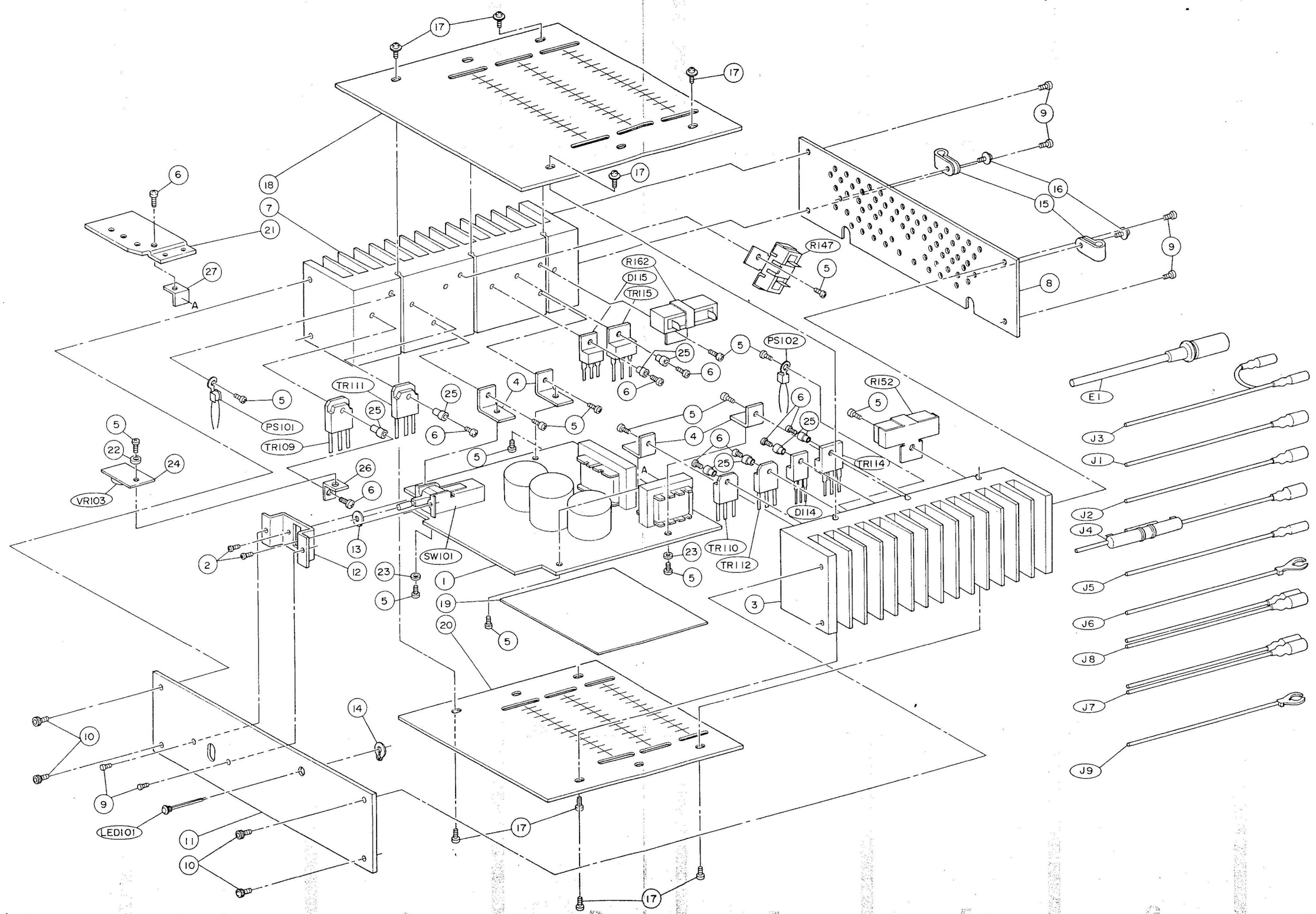

Semi-Conductor Lead Identifications

AN6551: IC101	**PS2001:** IC102	**2SC945:** Q103, Q104	**03P1M:** SR101	**2SA798:** Q101, Q102 **2SC509:** Q113
2SD667: Q105, Q106 **2SB647:** Q107, Q108	**5CH2M:** D114 **5EH2M:** D115	**2SD1047-E:** Q109 ∿Q112 **2SD847-B:** Q114, Q115	**2SA913:** Q116	

Packing Method

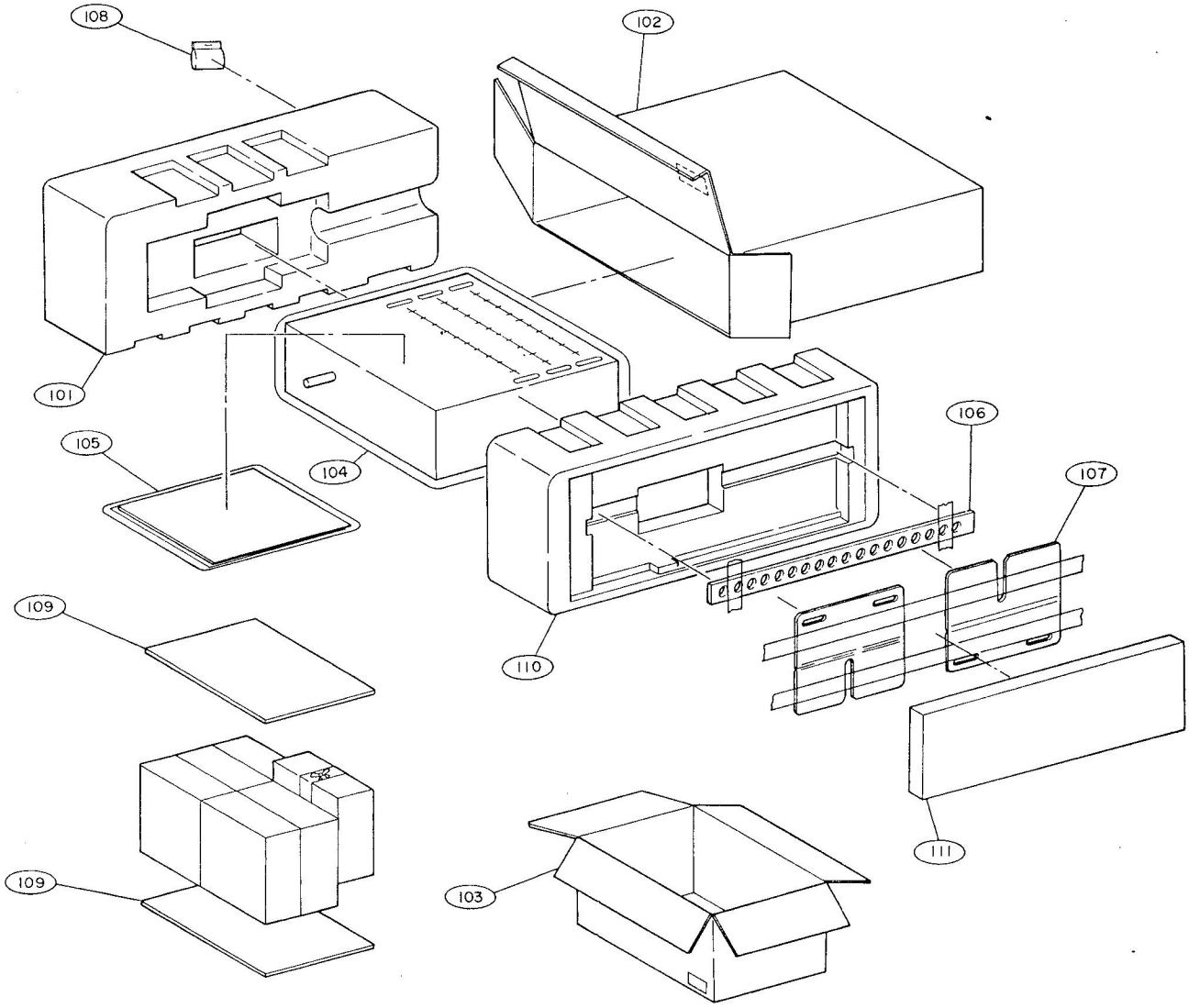

Parts List

Symbol No.	Part No.	Description
Booster Panel Assembly Parts		
Relays		
RL101	80T40895F01	FBR321D012 (12V)
C122	23B44780P05	Cap., Elec. 470μF 16V
R157	6S41801P08	Res, C.F. 10 ohm ¼W
R158	6S41801P39	Res, C.F. 3.9K ohm¼W
R160	6S41801P30	Res. C.F. 680 ohm ¼W
or		
RL101	80T40895F02	FBR321D009 (9V)
C122	23B44780P03	Elec. 220 μF 16V
R157	6S41801P14	Res, C.F. 33 ohm ¼W
R158	6S41801P43	Res, C.F. 8.2K ohm ¼W
R160	6S41801P42	Res, C.F. 6.8K ohm ¼W
RL102	80T40631F01	FBR-311
ICs		
IC101	51T40676F01	AN6551
IC102	51T44151F01	PS2001 (Photo Coupler)
Transistors and Thyristor		
Q101	48T43816F01	2SA798 (Dual Type)
Q102	48T43816F01	2SA798 (Dual Type)
Q103	48S44578J02	2SC945
Q104	84S44578J02	2SC945
Q105	48T40340U01	2SD667
Q106	48T40340U01	2SD667
Q107	48T40339U01	2SB647
Q108	48T40339U01	2SB647
Q113	48S43239G01	2SC509
Q116	48T40682F01	2SA913
SR101	48T42772U01	Thyristor (03P1M)
Filters and Transformer		
CF101	25T43367F02	Filter, Choke 0.2 mH
CF102	25T43368F02	Filter, Choke 62mH
CT101	25T43365F02	Transformer, Converter

Symbol No.	Part No.	Description
Diodes		
D101	48S134816	Silicon 1S1555
D102	48S134816	Silicon 1S1555
D103	48T40732F89	Zener (RD-39 E-B4)
D104	48T40732F89	Zener (RD-39 E-B4)
D105	48T40424U01	Varistor (VD1220)
D106	48T40424U01	Varistor (VD1220)
D107	48S134816	Silicon 1S1555
D108	48S134816	Silicon 1S1555
D109	48S134816	Silicon 1S1555
D110	48S134816	Silicon 1S1555
D111	48S134816	Silicon 1S1555
D112	48S134816	Silicon 1S1555
D113	48C40235G02	10E2
D116	48T44029U01 or	F114B
	48T43854F01	RGP10G
D117	48T44029U01 or	F114B
	48T43854F01	RGP10G
D118	48C40235G02	10E2
D119	48C40235G02	10E2
D120	48C40235G02	10E2
D121	48T40870U02	30D1
D122	48T40870U02	30D1
D123	48C40235G02	10E2
D124	48C40235G02	10E2
Capacitors (u = μ)		
C101	23S41198U12	Electrolytic 10uF 50V
C102	23S41198U12	Electrolytic 10uF 50V
C103	21C45322G27	Ceramic 470pF 50V
C104	21C54322G27	Ceramic 470pF 50V
C105	23S41198U59	Electrolytic 470uF 50V
C106	23S41198U59	Electrolytic 470uF 50V
C107	23S41198U28	Electrolytic 47uF 25V
C108	23S41198U28	Electrolytic 47uF 25V
C109	23S41198U28	Electrolytic 47uF 25V
C110	23S41198U28	Electrolytic 47uF 25V
C111	21C45322G25	Ceramic 220pF
C112	21C45322G25	Ceramic 220pF
C113	21C45322G22	Ceramic 100pF 50V
C114	21C45322G22	Ceramic 100pF 50V

Symbol No.	Part No.	Description
C115	23S41198U40	Electrolytic 220uF 10V
C116	23S41198U40	Electrolytic 220uF 10V
C117	23T43372F01	Electrolytic 3300uF 50V
C118	23T43372F01	Electrolytic 3300uF 50V
C119	8C44833J25	Mylar 0.1uF
C120	8C44833J25	Mylar 0.1uF
C121	23S41198U20	Electrolytic 33uF 16V
C123	23T43372F02	Electrolytic 3300uF 6.3V
C124	23S41198U38	Electrolytic 100uF 63V
C125	23S41198U67	Electrolytic 1000uF 50V
C126	23B44780P07	Electrolytic 2200uF 16V
C129	23B44780P01	Electrolytic 47uF 16V
C130	8C44833J19	Mylar 0.033uF
C133	8C44833J13	Mylar 0.01uF
Resistors (All resistor are carbon film, 1/4W, ±5% unless otherwise noted.)		
R101	6C44652G04	Metal Film 120 ohm 1W
R102	6C44652G04	Metal Film 120 ohm 1W
R103	6S41801P41	5.6K ohm
R104	6S41801P41	5.6K ohm
R105	6S41801P52	47K ohm
R106	6S41801P52	47K ohm
R107	6S41801P44	10K ohm
R108	6S41801P44	10K ohm
R109	6S41801P54	68K ohm
R110	6S41801P54	68K ohm
R111	6S41801P52	47K ohm
R112	6S41801P52	47K ohm
R113	6S41801P40	4.7K ohm
R114	6S41801P40	4.7K ohm
R115	6S41801P28	470 ohm
R116	6S41801P28	470 ohm
R117	6S41801P20	100 ohm
R118	6S41801P20	100 ohm
R119	6S41801P37	2.7K ohm
R120	6S41801P37	2.7K ohm
R121	6D44744G25	270 ohm ½W
R122	6D44744G25	270 ohm ½W
R123	6S41801P53	56K ohm
R124	6S41801P53	56K ohm
R125	6S41801P37	2.7K ohm

Symbol No.	Part No.	Description
R126	6S41801P37	2.7K ohm
R127	6S41801P36	2.2K ohm
R128	6S41801P36	2.2K ohm
R129	6S41801P34	1.5K ohm
R130	6S41801P34	1.5K ohm
R131	6S41801P12	22 ohm
R132	6S41801P12	22 ohm
R133	6S41801P16	47 ohm
R134	6S41801P16	47 ohm
R135	6S41801P26	330 ohm
R136	6S41801P26	330 ohm
R137	6S41801P26	330 ohm
R138	6S41801P26	330 ohm
R139	6C44652G17	Metal Film 0.2 ohm 2W
R140	6C44652G17	Metal Film 0.2 ohm 2W
R141	6C44652G17	Metal Film 0.2 ohm 2W
R142	6C44652G17	Metal Film 0.2 ohm 2W
R143	6S41801P08	10 ohm
R144	6S41801P08	10 ohm
R145	6D44744G28	470 ohm ½W
R146	6D44744G28	470 ohm ½W
R148	6S41801P44	10K ohm
R149	6S41801P57	120K ohm
R150	6S41801P45	12K ohm
R151	6S41801P51	39K ohm
R153	6S40150T25	22 ohm
R154	6S41801P44	10K ohm
R155	6S41801P44	10K ohm
R156	6S41801P44	10K ohm
R159	6S41801P44	10K ohm
R161	6S41801P08	10 ohm
R163	6S41801P33	1.2K ohm
R165	6S41801P08	10 ohm
R167	6C44652G17	Metal Film 0.2 ohm 2W
R168	6C44652G17	Metal Film 0.2 ohm 2W
R169	6C44652G17	Metal Film 0.2 ohm 2W
R171	6D44744G28	470 ohm ½W
R172	6D44744G28	470 ohm ½W
R173	6S41801P32	1K ohm
VR101	18C41732G16	Variable 150 ohm
VR102	18C41732G16	Variable 150 ohm

Symbol No.	Part No.	Description
Miscellaneous Parts		
D114	48T43363F01	Diode 5CH2M
D115	48T43364F01	Diode 5EH2M
E1	30T43520F01	Cable, DIN
J1	30T40440U01	Cable, Input (L)
J2	30T40439U01	Cable, Input (R)
J3	30T40441U01	Cable, Input (G)
J4	30T43510F02	Cable, Ignition
J5	30T43964F02	Cable, For +B
J6	30T43511F01	Cable, Ground
J7	30T40337U40	Cord, Speaker (L)
J8	30T40337U39	Cord, Speaker (R)
J9	30T40438U02	Cable, Ground
LED101	48T43366F01	LED (Red)
PS101	48T41991U04	PTH487A01BE222TS
PS102	48T41991U04	PTH487A01BE222TS
Q109	48T45359F01	Transistor, 2SD896
Q110	48T45359F01	Transistor, 2SD896
or	48T45359F02	Transistor, 2SD896-E
or	48T45361F01	Transistor, 2SD1046
or	48T45382F01	Transistor, 2SD1047-D
or	48T45382F02	Transistor, 2SD1047-E
Q111	48T45358F01	Transistor, 2SB776
Q112	48T45358F01	Transistor, 2SB776
or	48T45358F02	Transistor, 2SB776-E
or	48T45360F01	Transistor, 2SB816
or	48T45381F01	Transistor, 2SB817-D
or	48T45381F02	Transistor, 2SB817-E
Q114	48T43358F01	Transistor 2SD847 -B
Q115	48T43358F01	Transistor, 2SD847-B
R147	6T44585F03	Resistor Wire Wound 0.5 ohm 5W
R152	6T44585F03	Resistor Wire Wound 0.5 ohm 5W
R162	6T44585F02	Resistor Wire Wound 80 ohm 7W
SW101	40T43512F01	Switch, Lever
VR103	18C41732G07	Res., Variable 1K ohm-B

Symbol No.	Part No.	Description
General Assembly Parts		
1	1V43200F38	Assembly, Booster Panel
2	3S44205G12	Screw, Tapping (M3 x 6)
3	7B43356F01	Sink, Heat
4	7A43347F01	Bracket, P.C. Board
5	3S40011G99	Screw, Machine (M3 x 5)
6	3S40011G93	Screw, Machine (M3 x 8)
7	7B43356F02	Sink, Heat
8	64B43345F01	Panel, Rear
9	3S44205G02	Screw, Tapping (M3 x 6)
10	3B40942T01	Screw, Hex Socket (M3 x 6)
11	64B43344F01	Panel, Front
12	7A43348F01	Bracket, Switch
13	14A41740F02	Cover, Dust
14	4S44184F13	Washer, Grip
15	42B41424G04	Cord, Clamp
16	3S40018G02	Screw, Tapping (M3 x 8)
17	3S40018G08	Screw, Tapping (M3 x 8)
18	15B43346F01	Cover, Top
19	14A43781F01	Cover, Dust
20	15B43346F02	Cover, Bottom
21	7B44847F01	Sink, Sub Heat
22	4S40071G11	Washer, Spring
23	4S40072G01	Washer, Tooth Lock
24	84A45076F01	Panel Volume
25	43T45472F01	Bushing YC40B
26	7A43347F02	Bracket, P.C. Board
27	7A43347F03	Bracket, P.C. Board

Symbol No.	Part No.	Description
	Packing Assembly Parts	
101	56D43178U01	Tray, Packing
102	56C43353F01	Carton (Individual)
103	56D42220U23	Carton, Packing
104	56B40990T07	Sack, Polyethylene
105	1V43200F44	Assembly, Pamphlet
105-1	56B40230G12	Sack, Polyethylene
105-2	68P42990F27	Owner's Manual
105-3	68P44370P26	Cord, Warranty
105-4	54A44217U02	Card, Consumer Survey
105-5	54A40001F01	Card, Service Station List
106	42B40994G05	Strap, Receiver Mounting
107	7A43349F01	Bracket, Mounting
108	1V43200F45	Assembly, Kit Installation
108-1	56B40230G27	Sack, Polyethylene
108-2	4S40072G08	Washer, Tooth Lock
108-3	3S40012G39	Screw, Tapping (M5 x 20)
108-4	3A43315G10	Screw, Machine (M4 x 8)
108-5	3A43315G08	Screw, Machine (M5 x 20)
108-6	4S40072G11	Washer, Tooth Lock
108-7	2S40000G33	Nut, Hexagon
108-8	3S40012G45	Screw, Tapping (M5 x 10)
108-9	3S40018G12	Screw
108-10	65A40348G09	Fuse
108-11	45A41684U01	Arm, Adapter
109	56A43276P01	Pad, Packing
110	56D43178U02	Tray, Packing
111	56A42069P05	Pad, Packing