Car-radio Stereo cassette player 22RN348/00

Service
Service
Service

Service Manual

12 V

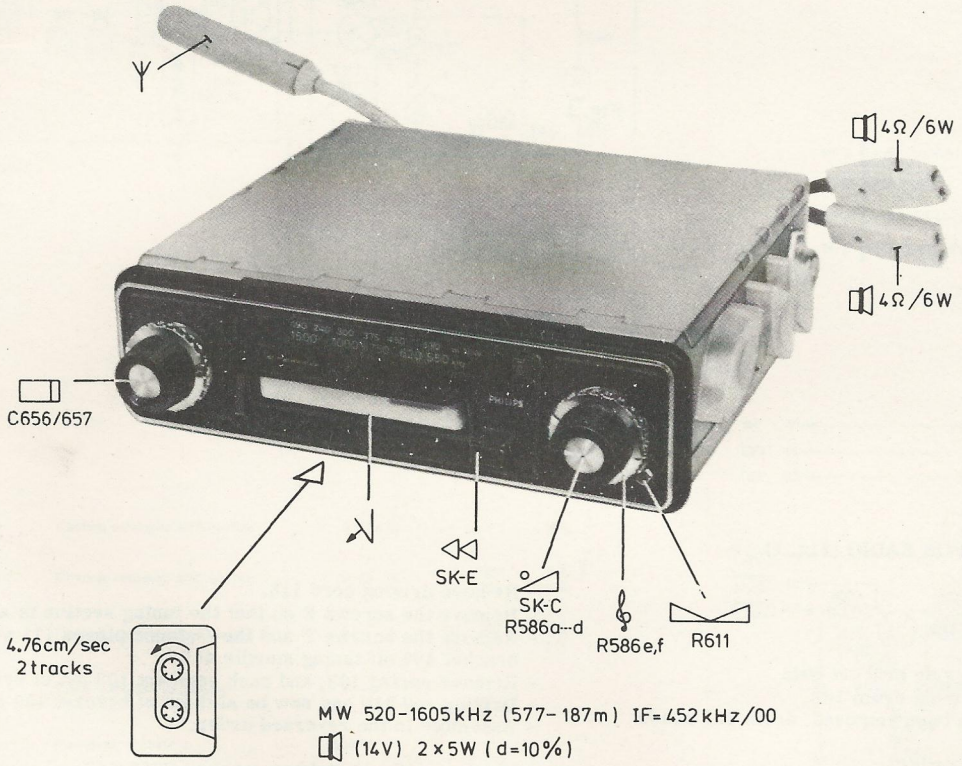

MW 520-1605 kHz (577-187m) IF=452 kHz/00
(14V) 2×5W (d=10%)
DIMENSIONS 178×51×150mm

Subject to modification
December 1975
3102-305-31851
Printed in Australia

PHILIPS

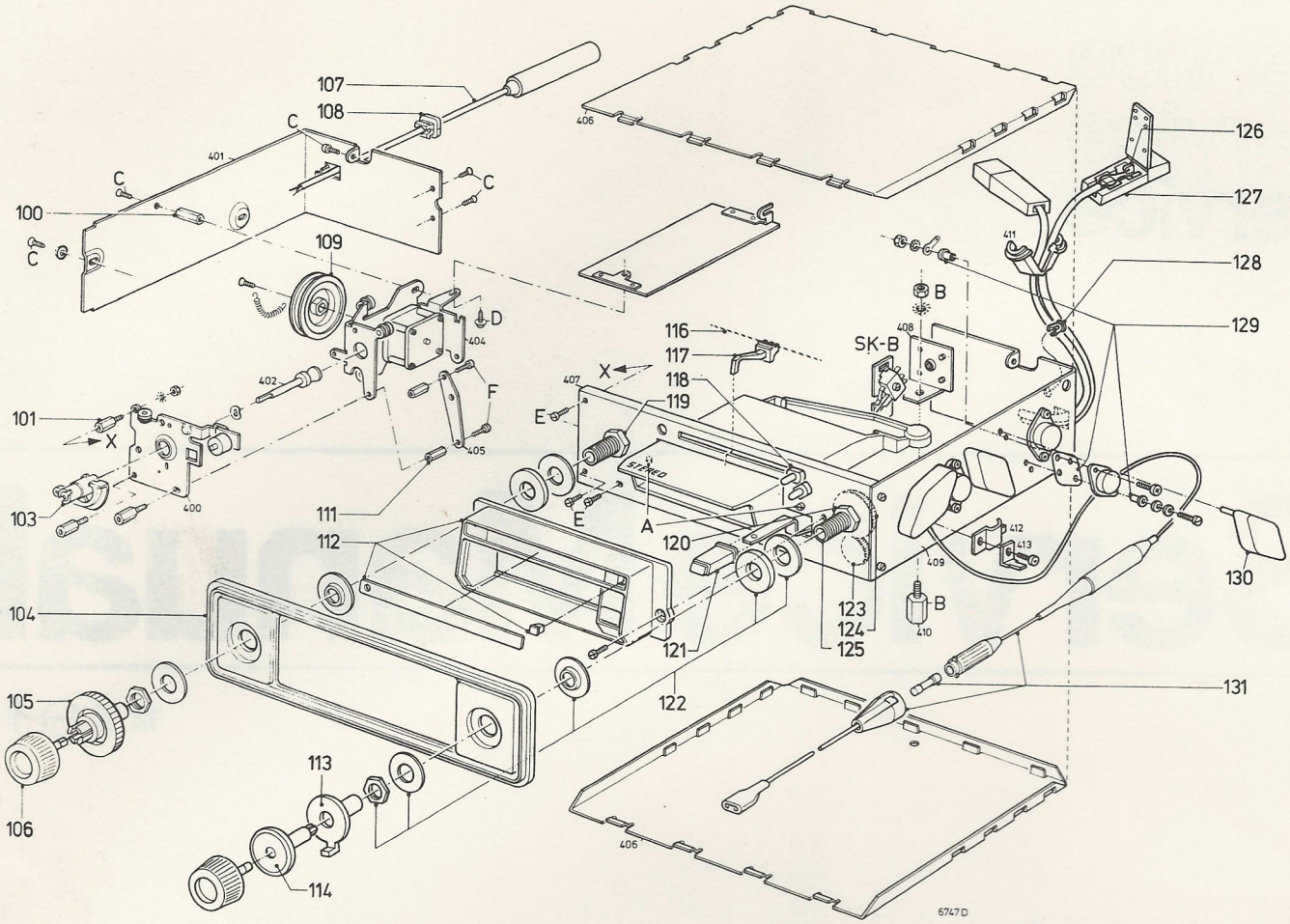

Fig. 1

REPAIR HINTS FOR RADIO (Fig. 1)

1. Replacing drum 119

- Remove the metal covers 406.
- Unsolder aerial cable 107.
- Remove the screws C and side bracket 401.
- Remove driving cord 116 from drum 109.
- After the fixing screw has been removed, drum 109 can be replaced.
- Assemble in the reversed order.

2. Replacing driving rod 110 and segment 103

- Remove side bracket 401 (see point 1).
- Remove screw D.
- Unsolder the wire from the aerial trimmer.
- Remove the HF/IF p.c. board so that the projection of driving rod 110 leaves the hole of the slide of switch 115.
- Remove driving cord 116.
- Remove the screws E so that the tuning section is accessible.
- Remove the screws F and the distance pieces 111 and slide bracket 400 off tuning spindle 402.
- Remove spring 102, and push segment 103 out of bracket 400.
- Driving rod 110 can now be slid out of bracket 400 as well.
- Assemble in the reversed order.

3. Replacing the variable capacitor C656/657

- Remove driving rod 110 (see point 2).
- Remove drum 109.
- After the fixing screws have been removed, the variable capacitor can be replaced.
- Assemble in the reversed order.

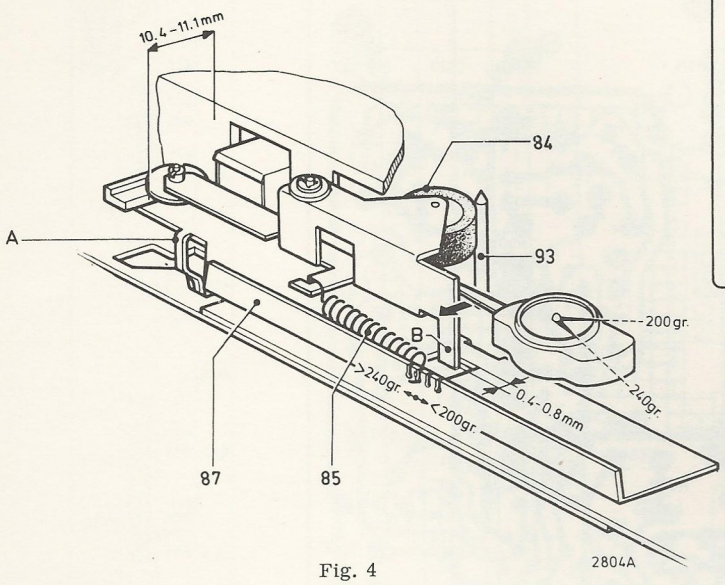

Fig. 4

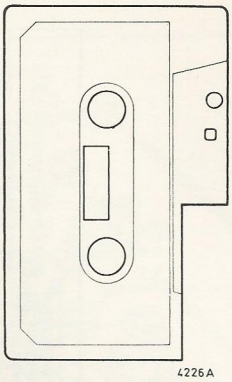

Fig. 2

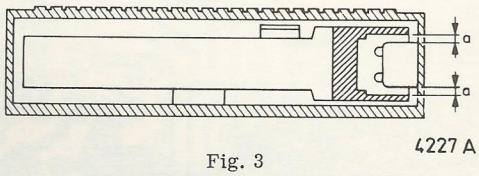

Fig. 3

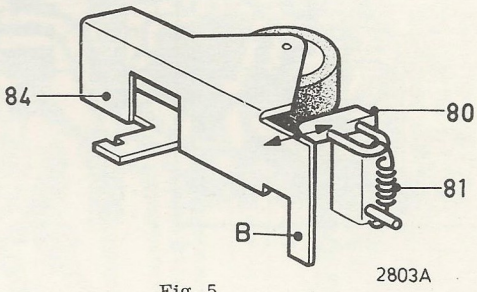

Fig. 5

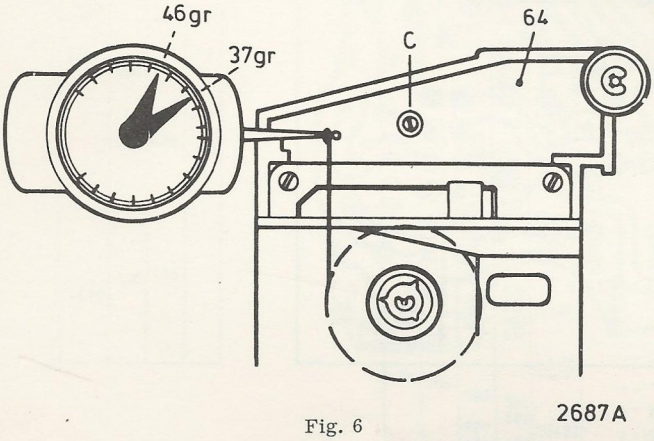

Fig. 6

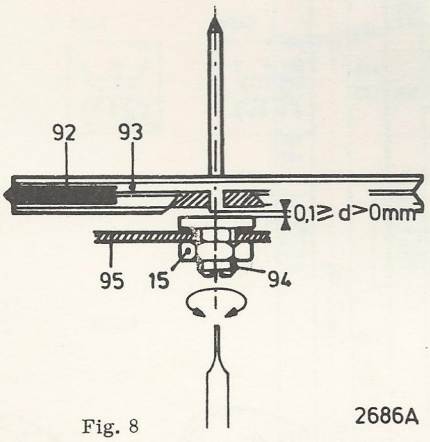

Fig. 8

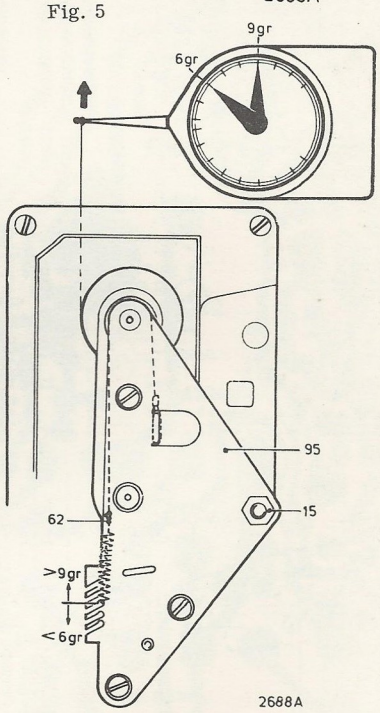

Fig. 7

PARTS LIST RECORDER (Fig. 9)

1	4822 530 70043	16	4822 502 10908	59	4822 532 50262	76	4822 358 30191	90	4822 466 90786
2	4822 530 70121	17	4822 502 10813	61	4822 528 80575	77	4822 528 80574	91	4822 278 90035
3	4822 530 70124	18	4822 505 10401	62	4822 321 30149	78	4822 532 50265	92	4822 358 30152
4	4822 492 61909	19	4822 505 10413	63	4822 532 10671	79	4822 492 61899	93	4822 528 60086
5	4822 530 70114	20	4822 502 11289	64	4822 256 90167			94	4822 500 10184
6	4822 530 80144	21	4822 502 11136	65	4822 520 30285	80	4822 403 50763	95	4822 403 50765
7	4822 530 80087	22	4822 290 30058	66	4822 249 10075	81	4822 492 31124	96	4822 255 40115
8	4822 530 80082	51	4822 492 31122	67	4822 492 51067	82	4822 361 70297	97	4822 214 50118
9	4822 502 10951	52	4822 403 50764	68	4822 462 70905	83	4822 532 50043	98	4822 214 50119
10	4822 502 10812	53	4822 492 31125	69	4822 520 30289	84	4822 403 40058		
11	4822 502 11055	54	4822 403 50766	70	4822 505 10545	85	4822 492 31123		
12	4822 502 11249	55	4822 403 50767	71	4822 466 10242	86	4822 492 40542		
13	4822 502 10909	56	4822 532 50945	72	4822 532 50944	87	4822 403 50829		
14	4822 502 10558	57	4822 528 20292	73	4822 528 20291	88	4822 278 90303		
15	4822 505 10283	58	4822 492 51044	74	4822 403 50768	89	4822 492 31126		

REPAIR HINTS FOR RECORDER (Figs. 1 and 9)

1. Removing the recorder (Fig. 1)

- Remove the metal caps, the knobs and the plastic front cap.
- Unsolder the wires from SK-B and the wire to the recording/playback head from the p.c. board.
- Remove the screws and rings A, nut and spacer B and button "fast winding".
- Set the recorder to position "playback".
- Push the recorder downwards at the rear and remove it backwards from the cabling.
- Building-in is done in the reverse order.

2. Replacing the cassette holder 64 and head bracket 87 (Fig.9)

- Set the recorder to position "playback".
- Remove springs 51 and 53.
- Remove the coupling pieces 54 and 74.
- Remove ejector bracket 501 after removing clamping ring 1.
- Remove screw 15 and toothed ring 8.
- Tilt cassette holder 64 (with head bracket 87) so that the cassette holder is disengaged from mounting plate 507.
- Turn cassette holder 64 (with head bracket 87) until the lug of head bracket 87 passes through the slot in fast-winding bracket 508 and remove the cassette holder with head bracket.
- Cassette holder 64 and/or head bracket 87 can be replaced after clamping ring 1 has been removed.
- Assembling is done in the reverse order.

3. Replacing the capstan bearing 69 (Fig. 9)

- Remove cassette holder 64 with bracket 87 (see para 2).
- Take belt 92 from the motor pulley.
- Remove 3 screws 14 and then bracket 95 with flywheel 93 and the two reel discs.
- Remove ring 68, nut 70 and replace capstan bearing 69.
- Assembling is done in the reverse order.

4. Replacing the bracket 95 and the components mounted on it (Fig. 9)

- Remove the coupling pieces 74 and 54.
- Take belt 92 from the motor pulley.
- Remove 3 screws 14 and then bracket 95 with flywheel 93, etc.
- The following parts can now be replaced:
  belts 76 and 92, catch 73, ring 510, pulley 77, flywheel 73, leaf spring 79, bracket with leaf spring 55, catch 57, spring 58, pulley 61, belt with spring 62, bracket 95.
- Assembling is done in the reverse order.

ADJUSTING AND CHECKING THE RECORDER

1. Adjusting the playback head 66 (Fig. 2 + 3)

a. Height adjustment (right)
- Open a cassette, remove the tape, the spring with felt, etc. and re-assemble the cassette halves. Remove a part of the cassette (Fig. 2).
- Insert this cassette into the recorder.
- Adjust the height of the playback head with nut 18a as shown in Fig. 3 and, if necessary, bend block 65.
- Lockpaint nut 18a.

b. Azimuth adjustment (left)
- Connect an electronic voltmeter to the loudspeaker terminals of the right-hand channel.
- Insert a test cassette (6300 Hz - 8945 600 13501) into the recorder.
- Adjust nut 18b so that max. output voltage is measured (note this value!).
- Connect the electronic voltmeter to the loudspeaker terminals of the left-hand channel.
- Re-adjust nut 18b so that max. output voltage is measured (note this value too!).
- Adjust the playback head to the average of the two values noted.
- Lockpaint nut 18b.

2. Checking the tape speed

- Check the tape speed with test cassette 8945 600 13501, on which every 4.76 m a signal has been modulated.
- Insert the test cassette into the recorder and set the recorder to position "playback".
- The time elapsing between the two signals must be 99...101 seconds. When the speed is too low, check that the pressure roller, the slip-action clutch, the flywheel, etc. do not have too much friction. Is this not the case, then adjust the tape speed as follows:
  . Set R924 to mid-position.
  . Turn R927 until quick signal variations are heard.
  . Adjust with R924 the time between the 2 signals to 85...88 seconds.
  . Adjust this time with R927 to 99 and 101 seconds.

3. Radio/playback switch SK-B 88 (Fig. 9)

When the set is not switched on properly in position "playback", this may be attributed to an incorrect adjustment of SK-B. Correct this adjustment by bending the bracket on which SK-B has been fitted.

4. Fast-winding switch SK-E 91 (Fig. 9)

This switch functions only properly when the surface of block 90 and the bent lug of SK-E are exactly parallel. Adjust the block by turning the lug of fast-winding bracket 508.

5. Head bracket 87 (Fig. 4)

- Set the recorder to position "playback".
- Adjust with lug A the clearance between cassette holder 64 and the fixing bush on head bracket 87.
- In position "fast winding" the clearance between capstan 93 and pressure roller 84 must be $\geq$ 1 mm. This clearance is also adjusted with lug A.

6. Pressure roller lever 84 (Figs. 4 and 5)

a. Adjusting the spring 85

When pressure roller 84 is just disengaged from capstan 93, the pulling force must be 200...240 g. Adjust this force by hooking spring 85 in another slot.

b. Adjusting the lever 84

- Set the recorder to position "playback".
- Adjust the lever by bending the lower part of lug B (Fig. 4).
- In position "ejecting cassette" lever 84 must be just disengaged from stop 80. Adjust this by bending the upper part of lug B (Fig. 5).

7. Adjusting the slip-action clutch (Fig. 6)

a. - Interrupt the supply voltage of the set.
  - Open a cassette on the right-hand side and remove so much tape that about 0.5 m is left over on the right-hand reel disc. Pull a piece of tape outwards and loop the end.
  - Insert the cassette so into the recorder that the opening is at the back.
  - Hook a spring-pressure gauge in the loop of the tape.
  - Apply again the supply voltage.
  - The friction force is adjustable with screw C.
  - When the force cannot be adjusted to the right value, the fault must be attributed to:
    1. faulty friction
    2. extended or greasy belt
    3. too slack leaf spring

b. The tape is not wound or wound irregularly in the cassette. This may be caused by:
  1. Too much friction in the cassette
     Check this by using another cassette
  2. Too little winding friction
  For causes, see a1, a2 and a3 of para 7.

8. Adjusting the counter friction (Fig. 7)

- Use the same cassette as mentioned in para 7.
- Insert this cassette so into the recorder that the opening is at the front.
- Hook a spring-pressure gauge in the loop of the tape.
- Adjust the friction by hooking spring 62 in another groove.

Note: If the value is not correct, check that the belt is free of grease.

9. Flywheel 93

For adjusting the flywheel, see Fig. 8.

Note: First loosen nut 15 some turns.

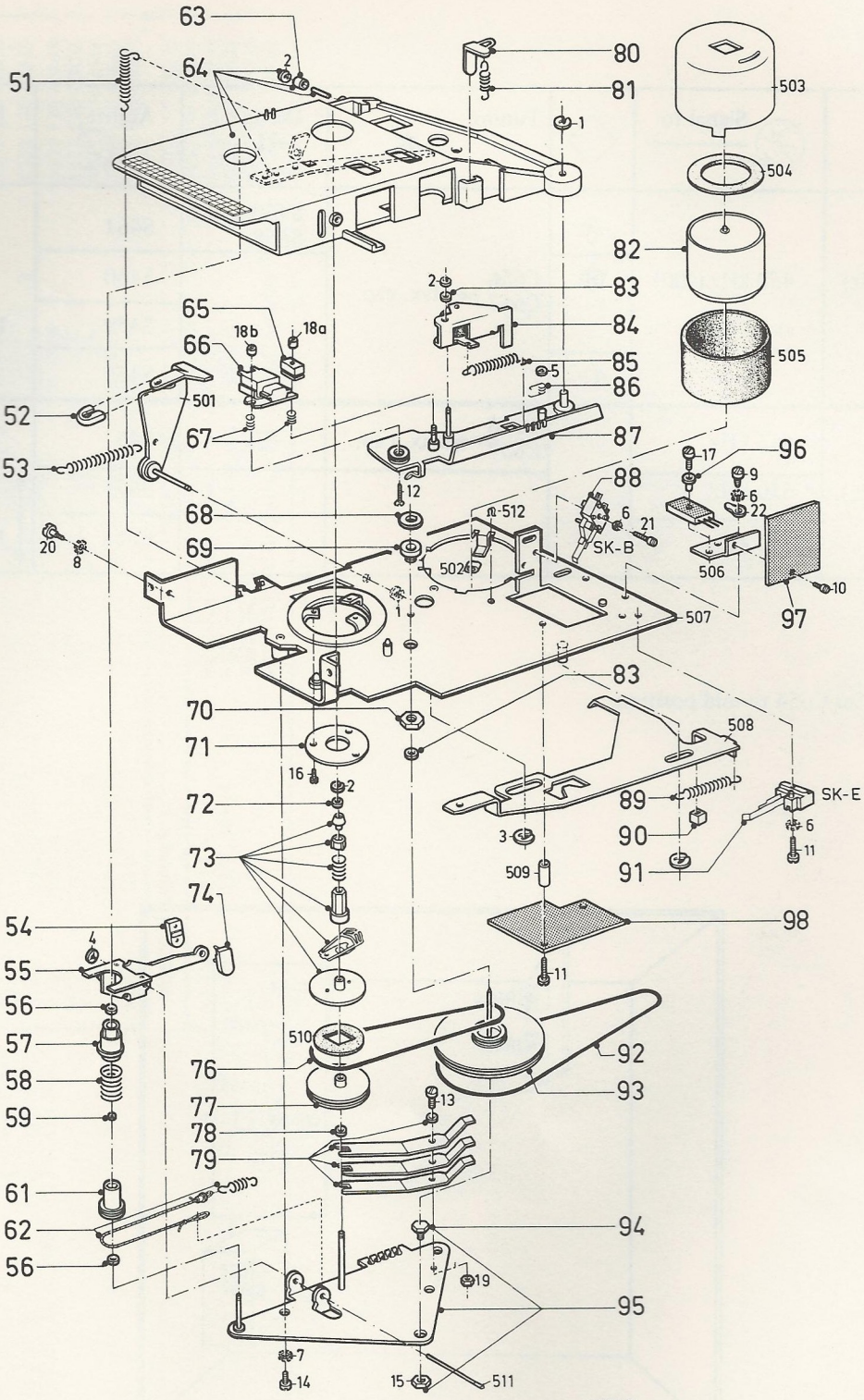
63
64
2
51
80
81
1
503
504
82
2
83
65
18b
18a
84
66
85
5
86
505
52
501
67
87
53
96
17
9
88
12
6
22
68
m-512
6
21
SK-B
20
8
69
502
506
10
1
97
507
83
70
508
71
16
2
72
89
SK-E
3
90
6
11
73
509
91
74
98
54
4
55
11
56
57
510
92
76
58
93
77
13
59
78
79
61
94
62
56
19
95
7
14
15
511
4224 D

100	4822 532 20635
101	4822 502 11293
103	3822 404 10227
104	4822 459 50167
105	4822 413 40653
106	4822 413 40691
107	4822 321 20228
108	4822 303 70039
109	4822 528 80534
111	4822 532 20634
112	4822 462 71032
113	4822 411 50352
114	4822 413 40692
116	4822 321 30084
117	4822 450 80403
118	4822 255 20068
119	4822 532 30325
120	4822 505 10533
121	4822 410 21358
122	4822 310 10131
123	4822 522 31179
124	4822 522 31157
125	4822 532 30326
126	4822 492 61359
127	4822 268 40084
128	4822 462 70679
129	5322 255 40069
130	4822 462 70468
131	4822 321 10112

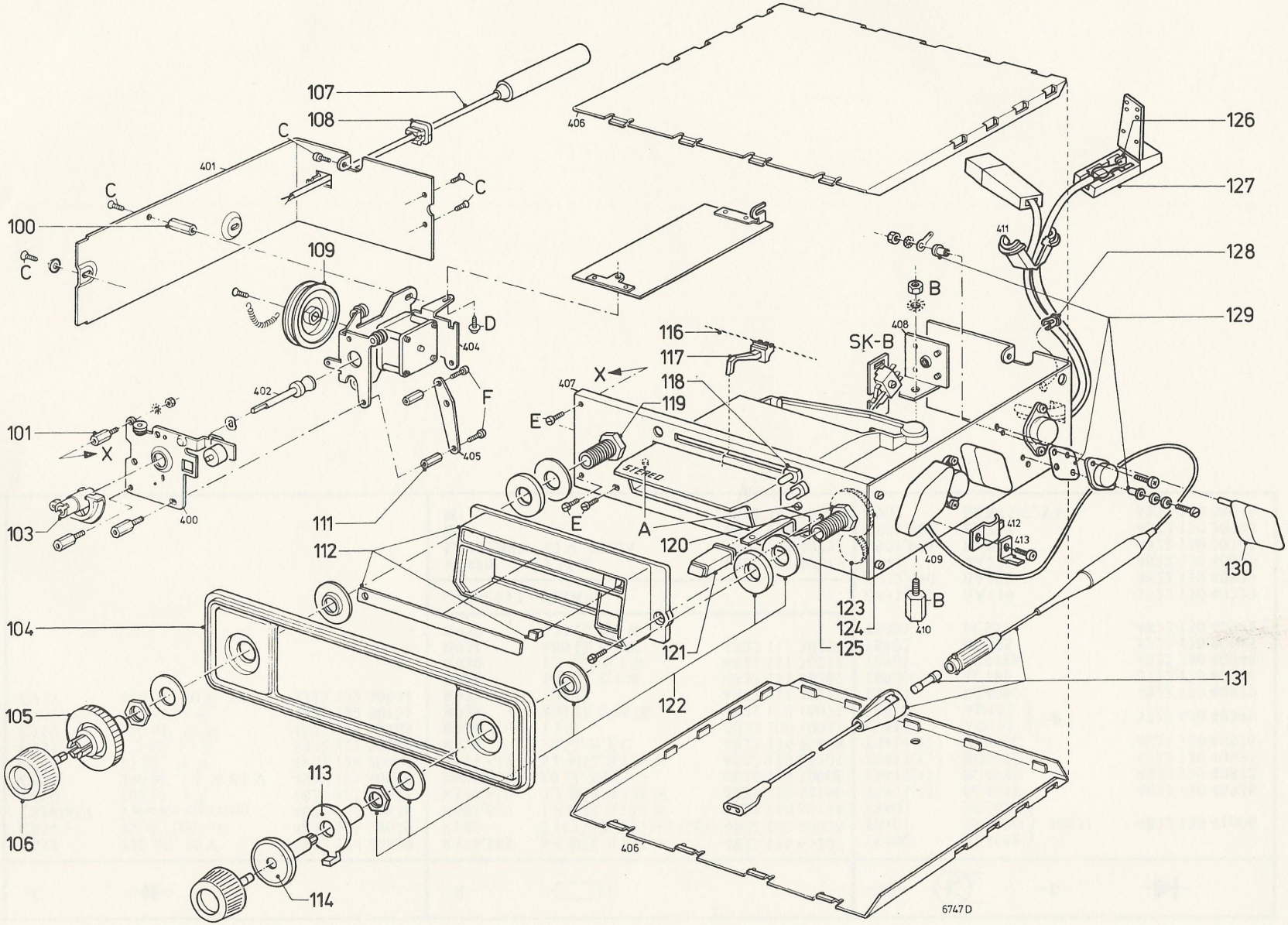

–S–

	abcd	
S451	72-2	4822 157 50636
S455		4822 157 50749
S456		4822 526 10025
S457	16-2	4822 157 50638
S458	33- -	4822 153 10083
S459	86- -	4822 153 10098
S460	96- -	4822 153 10099
S461	07- -	4822 153 10101
S910		4822 158 10224
S911		4822 158 10224
S912		4822 157 50747
S913		4822 526 10015

–C–

C653	220 µF, 10 V	4822 124 20589
C654	20 pF, trimmer	4822 125 50029
C656/657	Variable capacitor	4822 125 20176
C660	165 pF, 1 %	4822 121 50541
C666	390 pF, 2.5 %, 63 V	4822 121 50418
C753	33 µF, 16 V	4822 124 20468
C755,775	1.2 nF, 10 %	5322 122 30054
C759	180 nF, 10 %	4822 121 40305
C761,780	220 pF, 2 %	4822 122 30101
C915	820 pF, 10 %, 100 V	5322 122 30031

–R–

R576,583	5.6 MΩ, 0.125 W	4822 110 63207
R586	2 (47 kΩ+5 kΩ+17 kΩ)	4822 102 40028
R591,627	1.8 MΩ, 0.125 W	4822 110 63194
R594,630	2.2 MΩ, 0.125 W	4822 110 63196
R600,635	50 Ω, NTC	4822 116 30008
R614,617	5.6 MΩ, 0.125 W	4822 110 63207
R923	50 Ω, N.T.C.	4822 116 30008
R924	1 kΩ	4822 100 10021
R925	806 Ω, 0.25 %	4822 100 10073
R927	100 Ω	4822 111 30273
R929	10 kΩ, 0.1 W	4822 111 30267
R930	1.5 kΩ, 0.1 W	4822 111 30272
R931	680 Ω, 0.1 W	4822 111 30277
R932	22 kΩ, 0.1 W	

–MISCELLANEOUS –

VL480	3.15 A	4822 253 20025
LA481,482	12 V, 30 mA	4822 134 40301
K1		4822 249 10075
M1		4822 361 70288

–TS–

TS400	BF364B	40831	4822 130 41006
TS401	BF365D		
TS402	BF365C		
TS411,420	BC409B		4822 130 40936
TS412,421	BC408B		4822 130 40872
TS413,422	BC409C		4822 130 40935
TS414,417	BC408C		4822 130 40876
TS415	AD161	P	5322 130 40349
TS416	AD162		
TS417	BC408C		4822 130 40939
TS900	AC188		5322 130 40456
TS901	BC548A		4822 130 40948
TS902	BD135		5322 130 40645
TS903	BC557		4822 130 40973

–D–

D431,433	AA119	5322 130 40229
D432,440	BA220	4822 130 40879
D441	BA220	4822 130 40879
D905,906	BA217	4822 130 30703
D907,908	BA217	4822 130 30703
D909	BZX75/C2V1	5322 130 34049

Wave range SK....	Signal to		Tuning	Detune	Adjust	Indication
MW (520-1605 kHz)	452 kHz (/00) via 33 nF	A	C656 C657 → Max. cap.	S460,459 S458	S461	1 Max.
		B			S460	
					S459	
		C			S458	
MW (520-1605 kHz)	515 kHz	D	C656 C657 → Max. cap.	1	S457	1 Max.
	550 kHz				S451	
	1635 kHz				C654	

1 Set C654 to mid position.

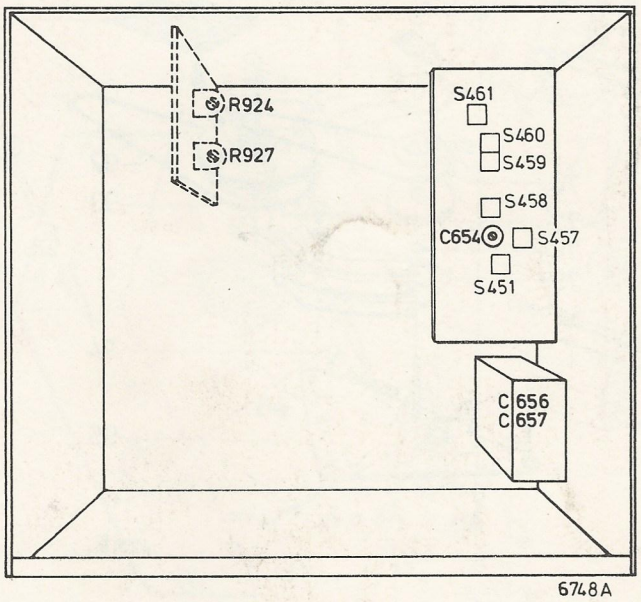

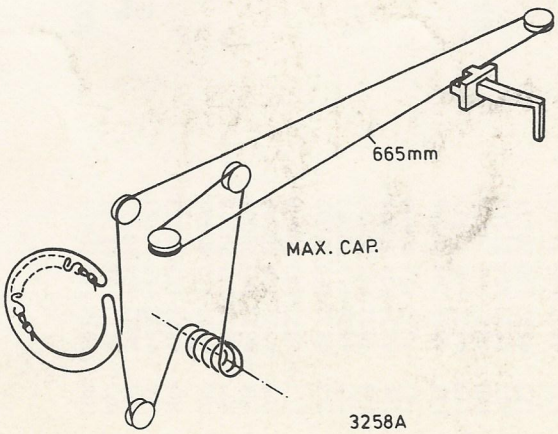

S	455 451 912 454 910,911 456 457 458 459 460 471 461	S
C	654 666 671 657 658 660 661 664 663 669 676 675 677 770 751 758 759 752 754 755 756 760 764 761 762 763 765 766	C
C	916 917 918 915 753 769 674 653 767 768 771 772 777 773 778 774 775 776 779 780 782 781 783 784 785	C
R	512 509 500 510 503 508 505 502 506 507 513 607 609 610 576 577 578 580 585 586 582 583 611 587 584 589 591 588 594 590 592 593 595÷600	R
R	931 930 932 920 926 921÷925 927 928 603÷606 501 514 601 602 608 612 613 614 615 621 618 620 616 617 619 622 623 625 624 630 627 626 634 633 632 631 629 628 635	R
MISC	SK-D D905÷907 D908,909 TS903 TS900 SK-E TS901,902 M D433 TS400 TS 417 D431 TS 401 LA 481 SK-B LA 482 TS 402 SK-C VL 480 D432 TS 419 K1 TS 418 TS 420,411 TS 412 TS 421 TS 413 TS 422 D440,441 TS 414,423,415a,415b,424a,424b	MISC

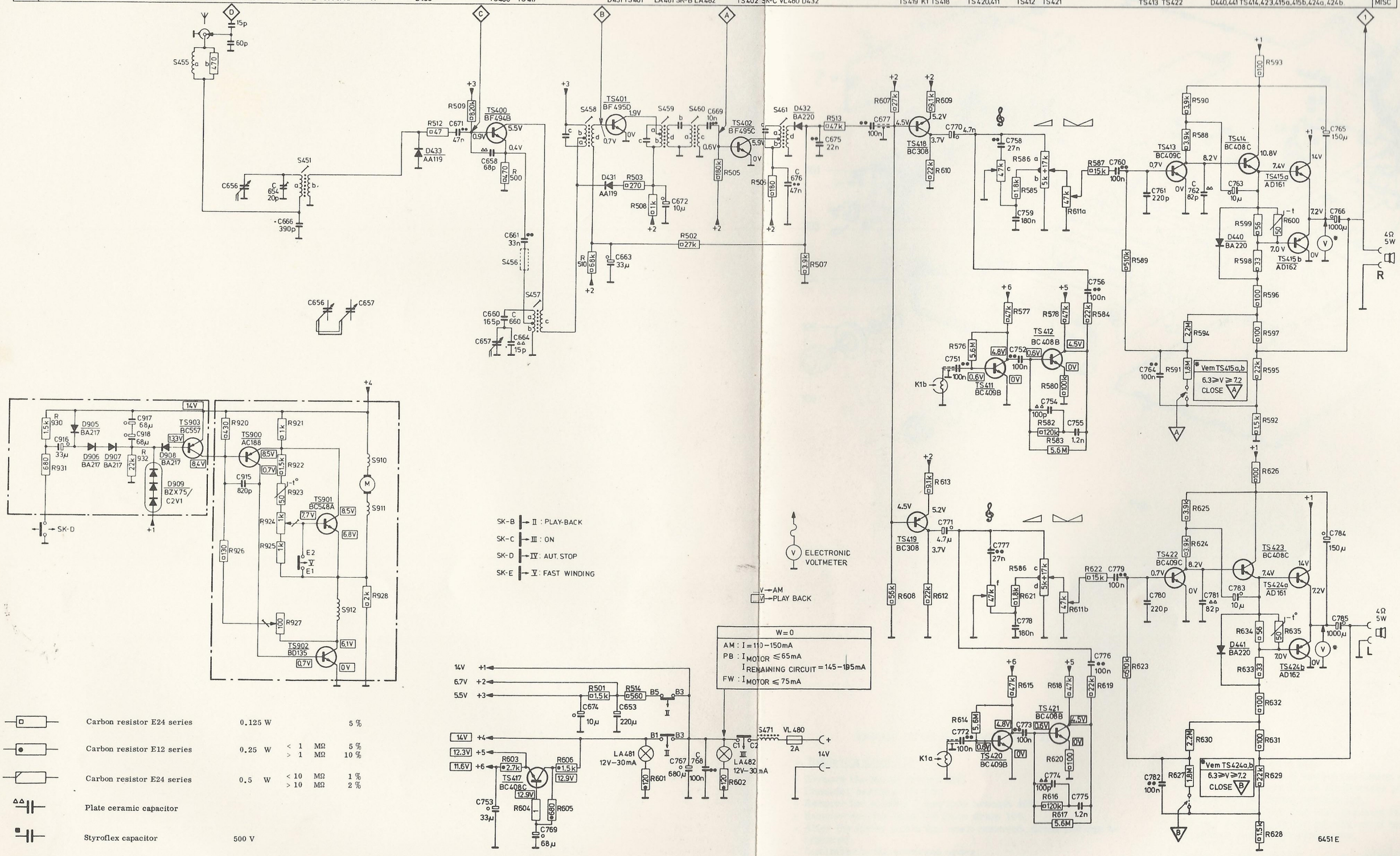

Carbon resistor E24 series	0.125 W		5 %
Carbon resistor E12 series	0.25 W	< 1 MΩ > 1 MΩ	5 % 10 %
Carbon resistor E24 series	0.5 W	< 10 MΩ > 10 MΩ	1 % 2 %
Plate ceramic capacitor			
Styroflex capacitor	500 V		
Flat-foil polyester capacitor			
Miniature electrolytic capacitor			

PRINT 2				
C	C	R	R	MISC.
765				
	766			
	785			
784				
		633		
		632	605	
		631	606	
		634		
		630	603	TS417
		629	604	D441
		627		
	769			
782		628		
	753		615	
	772	600		TS420
		592		
	751	599	614	
			577	
			620	
			576	
	768		618	
767	773	598		
	764	595		TS411
			580	
		597	619	
		591		D440
	774			TS472
	752	594		
	775	596		
	776		578	
		593	616	TS424
		589	583	
	755		617	
				TS414
	754			TS421
		590	584	
			582	
		626		TS423
		588	609	
			608	
			610	
763	763	625		
762				TS418
783		624		SK-C
761		623	607	TS424
				TS422
780				TS419
781				TS413
			612	
760				
759				
779			621	
778	756		586	
	771			
				TS415
	770	622		
		587		
		585		
	758		586	
	777			
		611		
				TS415

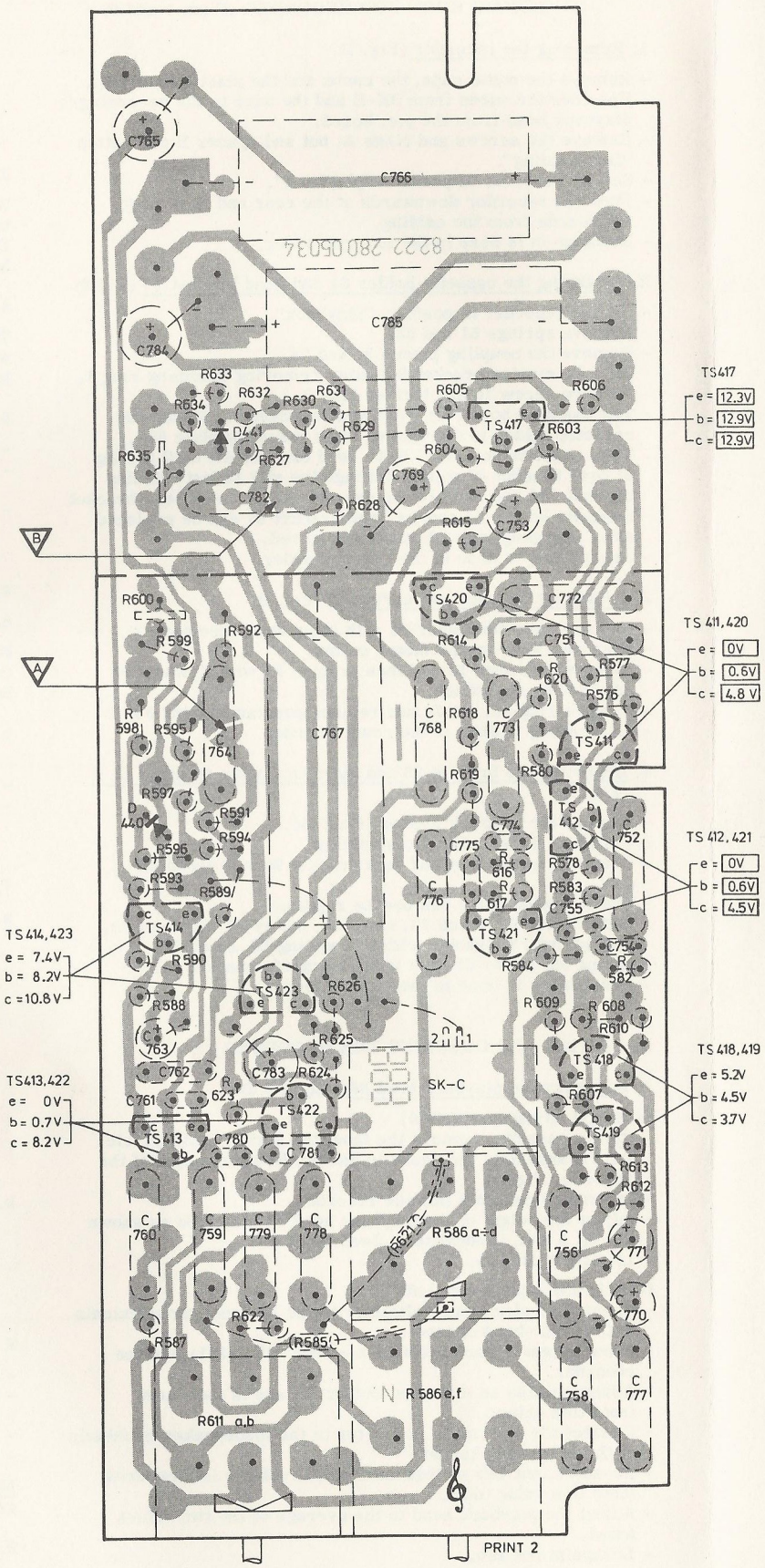

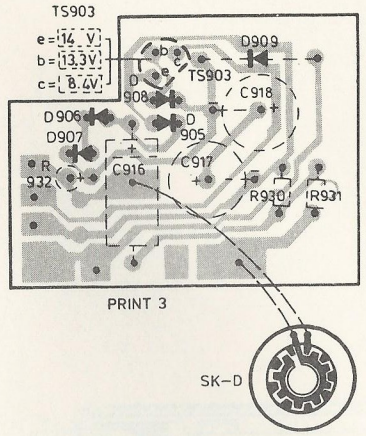

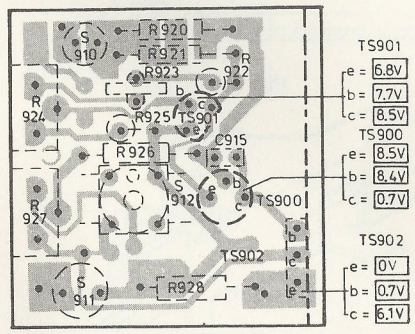

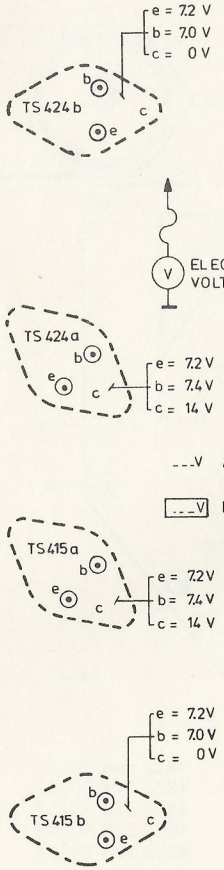

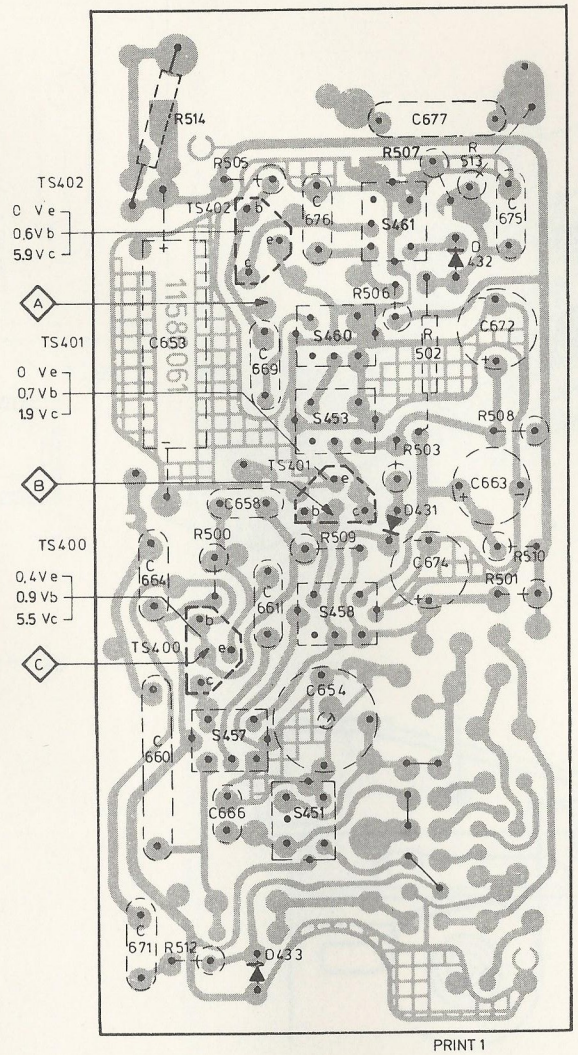

PRINT 1,3,4			
S	C	R	MISC
			D 909
			TS903
	918		D908
			D906
			D907
	677		D905
		514	
		507	
	917	513	
	916	505	
		932	
		931	
	675	930	TS402
461	676	929	
			D432
		506	
			SK-D
460	672		
	653	502	
	669		
453		508	
		503	
		920	TS401
	663	921	
910	658	922	
		923	D431
		500	
		509	
	674	510	
	915	924	TS901
	664	925	
		501	
458	661	926	
			TS400
912		927	TS900
	654		TS902
911			SK-A
457		928	
	660		
451	666		
	671	512	D433

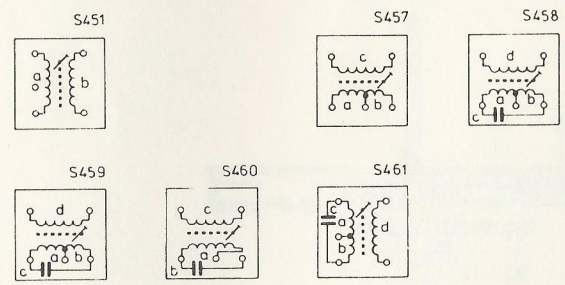
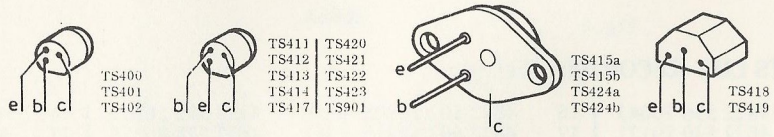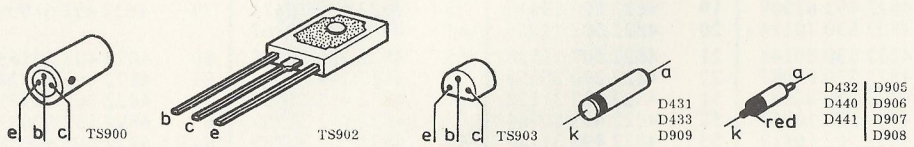
6453D