RECEIVERS A.C. SERVICE DATA **175-175A**

PHILIPS RADIOPLAYER
MODELS 175, 175A

Note: Models 175 and 175A vary in type of record changer only (see "Specifications").

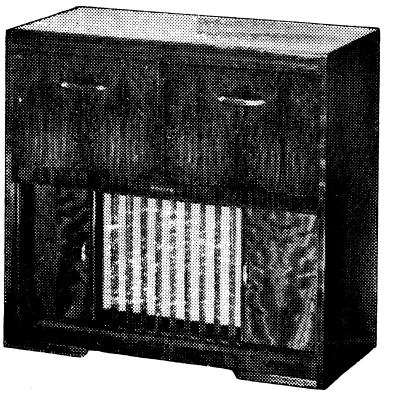

SPECIFICATIONS

(Subject to alteration without notice)

Power Supply	200-250V, 40-50 c/s.
Tuning Ranges	530-1620 kc/s. 4.7-9.2 Mc/s. 9.1-18.4 Mc/s.
Intermediate Frequency	455 kc/s.
Cabinet	Radiogram
Gramo. Unit, Model 175	Philips type AG1000
Gramo. Unit, Model 175A	Collaro type RC54

VALVE EQUIPMENT AND VOLTAGE ANALYSIS

Valve Function	Valve No.	Valve Type	Plate Volts	Screen Volts	Osc. P. Volts
Frequency Converter	V1	6AN7	205	57	48
I.F. Amplifier	V2	6BH5	205	57	—
Demodulator, A.V.C. & Audio Amplifier	V3	6BD7	62	—	—
Push-Pull Power Amplifier	V4	6M5	260	205	—
Push-Pull Power Amplifier	V5	6M5	260	205	—
Rectifier	V6	6V4	Cathode — L18 C.T., 271V.		
Dial Lamps	V11, V12	6.3V, 0.32A. tubular screw			
Voltage across R18, −6.4V.					

NOTE: These voltages are measured with an "1,000 ohms per volt" meter and may vary ± 10% from the figures quoted. They are measured from the socket points indicated to chassis or across the resistor listed. The receiver should be in a "no signal" condition.

TO REMOVE CHASSIS FROM CABINET.

Remove the power plug from the mains outlet socket. Remove the four control knobs (a firm pull is all that is necessary). Remove the cabinet back. Remove the aerial and earth terminal panel and unclip the leads from the cabinet.

Remove the pick-up, speaker and gramo. unit power plugs from their respective sockets. Remove the two screws at the top of the dial back plate and the two screws at the back of the chassis. The chassis may now be withdrawn from the cabinet.

The replacement of the chassis is a reversal of the above procedure. Care should be taken to see that the front edge of the side chassis flange engages under the lip of the front mounting bracket.

MAINS VOLTAGE ADJUSTMENT.

The power transformer is provided with two mains voltage tappings on the primary winding—200/230 volts and 240/250 volts—for adjustment to the supply voltage at the point of installation. The receiver is adjusted at the factory to the 240/250 volts tapping.

DIAL CALIBRATION.

In the event of an equal calibration error over the entire dial scale, the dial cursor can easily be moved on the dial drive cord to correct the error.

ALIGNMENT.

During alignment, set volume control at maximum and tone control at central position. With the tuning capacitor fully closed, set the dial cursor on the 120 mark of the relocation scale.

I.F. channel alignment is carried out in the following sequence:—

Connect 100 pF capacitor from plate of 6BH5 to chassis and peak secondary of 2nd I.F.T. (screw nearer 6BD7).

Transfer 100 pF capacitor to 6BD7 diode to chassis position and peak primary of 2nd I.F.T. (screw nearer 6BH5).

Remove the detuning capacitor and peak secondary of 1st I.F.T. (screw nearer 6BH5).

Peak primary of 1st I.F.T. (screw nearer 6AN7).

Repeat operations on 1st I.F.T. ONLY.

The trimmer layout drawing is shown as an inset on the circuit diagram drawing.

B/C band alignment frequencies are: 1,420 kc/s, 3XY (oscillator and aerial trimmers), and 600 kc/s, 7ZL (slug padding with gang rocking).

On the short wave bands the oscillator operates on a frequency above signal frequency so that of the two signals tunable on the receiver, the high frequency one is correct. In short wave alignment, SW2 band (4.7-9.2 Mc/s) should be done first before attempting alignment of SW1 band.

On SW2 band (4.7-9.2 Mc/s), alignment frequencies are 4.825 Mc/s (114 on relocation scale), (oscillator coil slug) and 8.9 Mc/s (16 on relocation scale), (oscillator and aerial trimmers). Rock the tuning gang while adjusting the aerial trimmer.

SW1 band (9.1-18.4 Mc/s) alignment frequency is 17.8 Mc/s (small green triangle), (oscillator and aerial trimmers, rock gang while adjusting aerial trimmer). Calibration should be checked at 9.65 Mc/s (small green triangle).

Do not attempt to adjust the iron cores of the aerial coils.

Published by Philips Electrical Industries Pty. Ltd.
FEBRUARY, 1956 Sydney — Melbourne — Brisbane — Adelaide — Perth

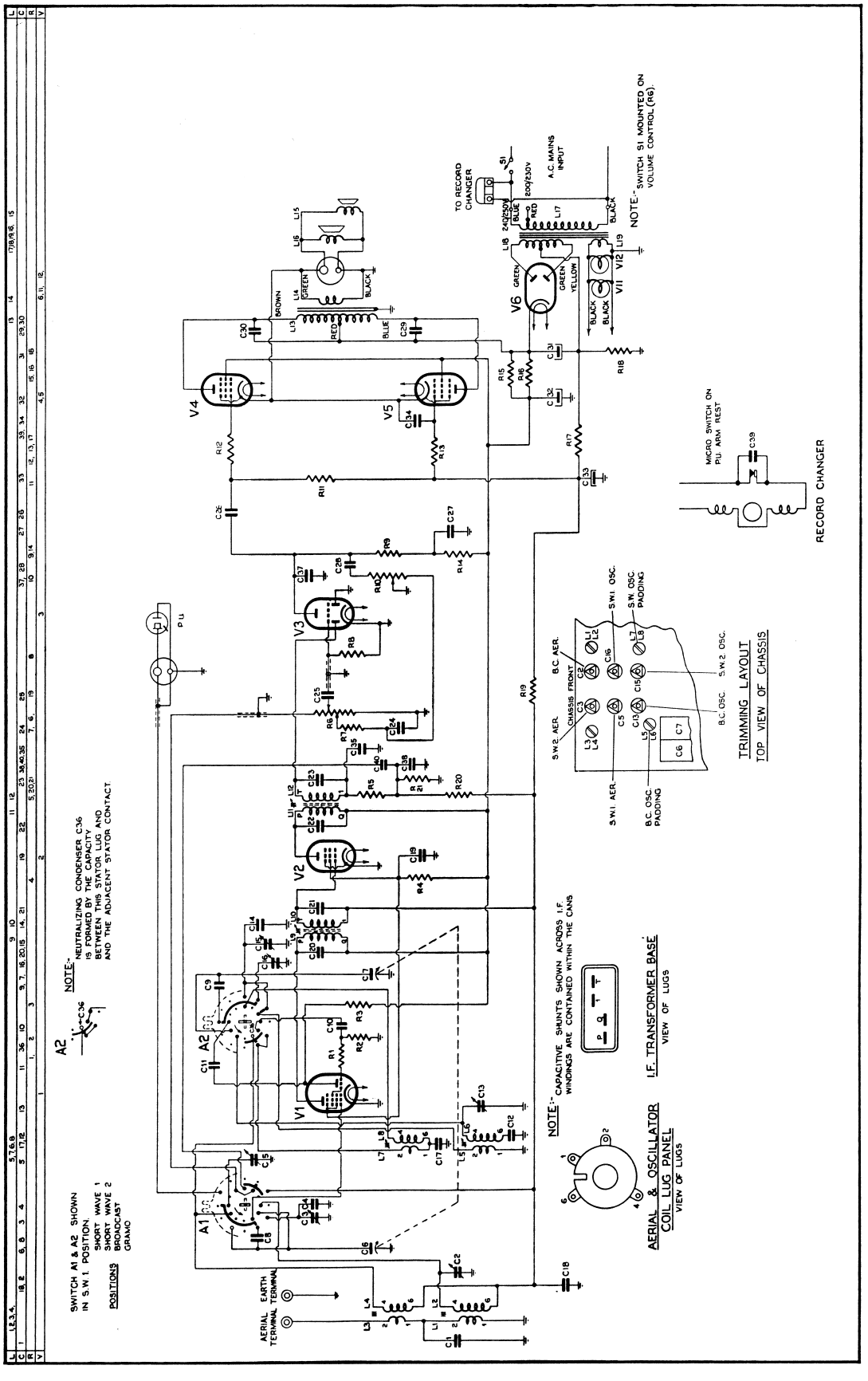
SWITCH A1 & A2 SHOWN IN S.W.1 POSITION.
POSITIONS
SHORT WAVE 1
SHORT WAVE 2
BROADCAST
GRAMO
NOTE:- NEUTRALIZING CONDENSER C36 IS FORMED BY THE CAPACITY BETWEEN THIS STATOR LUG AND AND THE ADJACENT STATOR CONTACT
A2
C36
A1
A2
V1
V2
V3
V4
V5
V6
P.U.
AERIAL EARTH TERMINAL
NOTE:- CAPACITIVE SHUNTS SHOWN ACROSS I.F. WINDINGS ARE CONTAINED WITHIN THE CANS
AERIAL & OSCILLATOR COIL LUG PANEL
VIEW OF LUGS
I.F. TRANSFORMER BASE
VIEW OF LUGS
TO RECORD CHANGER
A.C. MAINS INPUT
200/230V
240/250V
NOTE:- SWITCH S1 MOUNTED ON VOLUME CONTROL (R6).
MICRO SWITCH ON P.U. ARM REST
RECORD CHANGER
TRIMMING LAYOUT
TOP VIEW OF CHASSIS
B.C. AER.
S.W.2 AER.
S.W.1 AER.
B.C. OSC. PADDING
B.C. OSC.
S.W.1 OSC.
S.W. OSC. PADDING
S.W.2 OSC.
CHASSIS FRONT

PARTS LISTS

CAPACITORS

No.	Description	Code No
C1, 10, 11, 35, 37, 38	100 pF mica	
C2, 3, 5, 15, 16	30 pF air trimmer	CZ.113.700
C4	115 pF mica 2½%	CZ.066.138
C6–7	2 gang tuning	CZ.107.746
C8, 9	180 pF mica 1%	CZ.065.722
C12	475 pF mica 2%	CZ.066.119
C13	60 pF air trimmer	49.005.58
C14	110 pF mica 2½%	CZ.066.140
C17	0.0045 mF mica 10%	
C18, 40	0.05 mF 200V paper	
C19	0.05 mF 400V paper	
C20, 21, 22, 23	Part of I.F. transformers	
C24	0.03 mF 200V paper	
C25	0.01 mF 400V paper	
C26, 28	0.005 mF 600V paper	
C27	0.1 mF 400V paper	
C29, 30	0.002 mF 600V paper	
C31, 32	40 mF 350V electrolytic	
C33	100 mF 10V electrolytic	
C34	500 pF mica	
C36	In-built neutralising capacitor—refer circuit diagram drawing	
C39	0.01 mF 600V paper	

All tolerances are ± 20% unless otherwise specified.

RESISTORS

No.	Description	Code No.
R1	100 ohms ½W carbon	
R2	22,000 ohms ½W carbon	
R3	47,000 ohms 1W carbon 10%	
R4	47,000 ohms 1W carbon	
R5, 13, 14	47,000 ohms ½W carbon	
R6	0.5 megohm carbon potentiometer, tapped at 0.25 megohm, with S.P.S.T. switch	CZ.032.014
R7	12,000 ohms ½W carbon 10%	
R8	10 megohms ½W carbon	
R9, 21	0.22 megohm ½W carbon	
R10	1 megohm carbon potentiometer	CZ.029.149
R11	0.47 megohm ½W carbon	
R12	4,700 ohms ½W carbon	
R15, 16	5,600 ohms 1W carbon 10%	
R17	470 ohms ½W carbon	
R18	100 ohms 1W W/W 10%	
R19	4.7 megohms ½W carbon	
R20	1 megohm ½W carbon	

All tolerances are ± 20% unless otherwise specified.

COILS

No.	Ohms	Description	Code No.
L1	19.6-26.4	B/C aerial coil	CZ.323.026
L2	1.5-2.0		
L3	1.2-1.7	S/W aerial coil	CZ.323.027
L4	<0.5		
L5	0.8-1.2	B/C oscillator coil	CZ.330.613
L6	2.7-3.7		
L7	<0.5	S/W oscillator coil	CZ.330.614
L8	<0.5		
L9	11.5-15.5	1st I.F. transformer	A3.124.25
L10	11.5-15.5		
L11	11.5-15.5	2nd I.F. transformer	CZ.320.434
L12	11.5-15.5		
L13		Output transformer	
L14		15,000 ohms p-p	type KOL33
L15		Speaker	type 5C, F87
L16		Speaker	type 12K, F25
L17	26-36	Power transformer	CZ.344.089
L18	315-425		
L19	<0.5		

IMPORTANT! In ordering spare parts, quote CODE NUMBER of part and MODEL NUMBER of Receiver. In claiming free replacement under GUARANTEE, return defective part PROMPTLY and quote MODEL and SERIAL NUMBER of Receiver and DATE OF PURCHASE.

MISCELLANEOUS COMPONENTS

No. on Dial Cord Layout Drawing	Description	Code No.
6	Assembly, cursor	CR.480.664
—	Assembly, lampholder, 2x	C/F733-5-4
3	Assembly, tuning spindle	CR.371.223
—	Badge, Philips	CR.531.408
—	Bank, W/C switch (aerial)	CZ.200.060
—	Bank, W/C switch (osc.)	CZ.200.061
—	Clip, spring (knob), 4x	CS.281.832
—	Clip, spring (I.F.T. mtg.), 2x	A3.652.58
—	Cloth, baffle	CE.081.14
4	Cord, dial drive	69" of cord required
1	Drum, dial	CS.360.006
—	Knob, control, 4x	CR.523.714

No. on Dial Cord Layout Drawing	Description	Code No.
—	Plug, male (gramo. unit power)	CZ.365.115
—	Plug, 2 pin polarised (speaker and pick-up)	C/F691-5-1
5	Pulley, dial (large)	CS.359.613
2	Pulley, dial (small), 2x	CS.359.612
—	Scale, dial	CS.412.395
—	Socket, female (gramo. unit power)	CZ.365.116
—	Socket, 2 pin polarised (speaker and pick-up)	C/F733-16-1
—	Socket, valve (noval), 6x	C/F733-2-14
7	Spring, cursor	CS.212.016
8	Spring, dial cord	CS.210.043

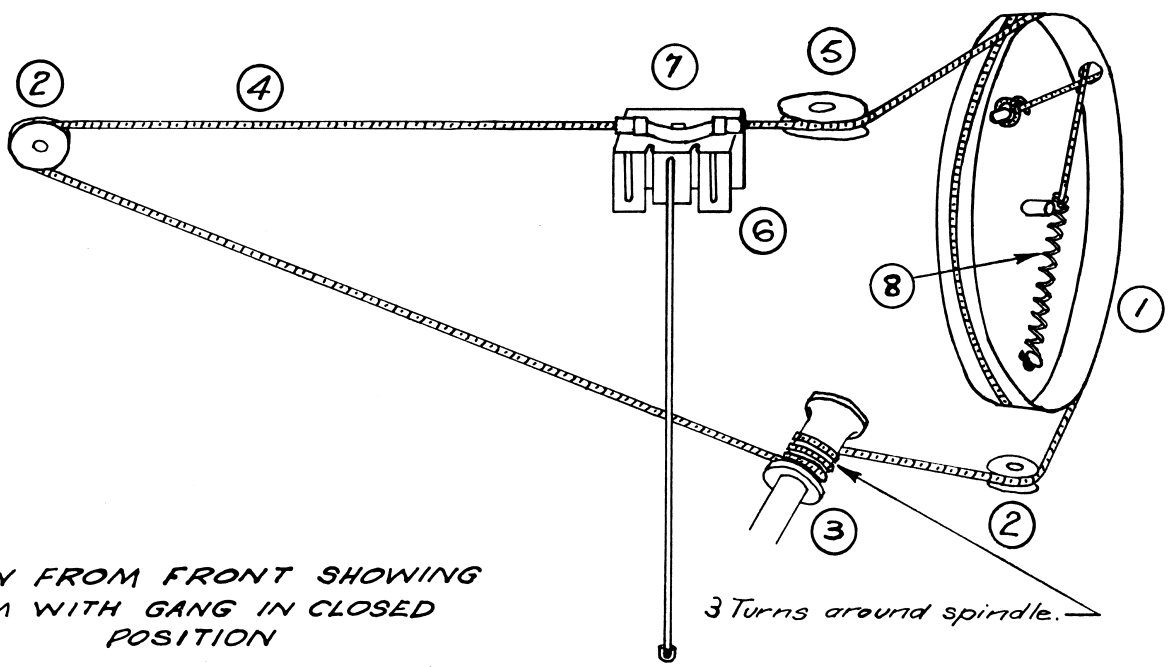

VIEW FROM FRONT SHOWING DRUM WITH GANG IN CLOSED POSITION