SANYO

MODEL
16-PS2

SANYO PORTABLE TELEVISION
SERVICING INFORMATION

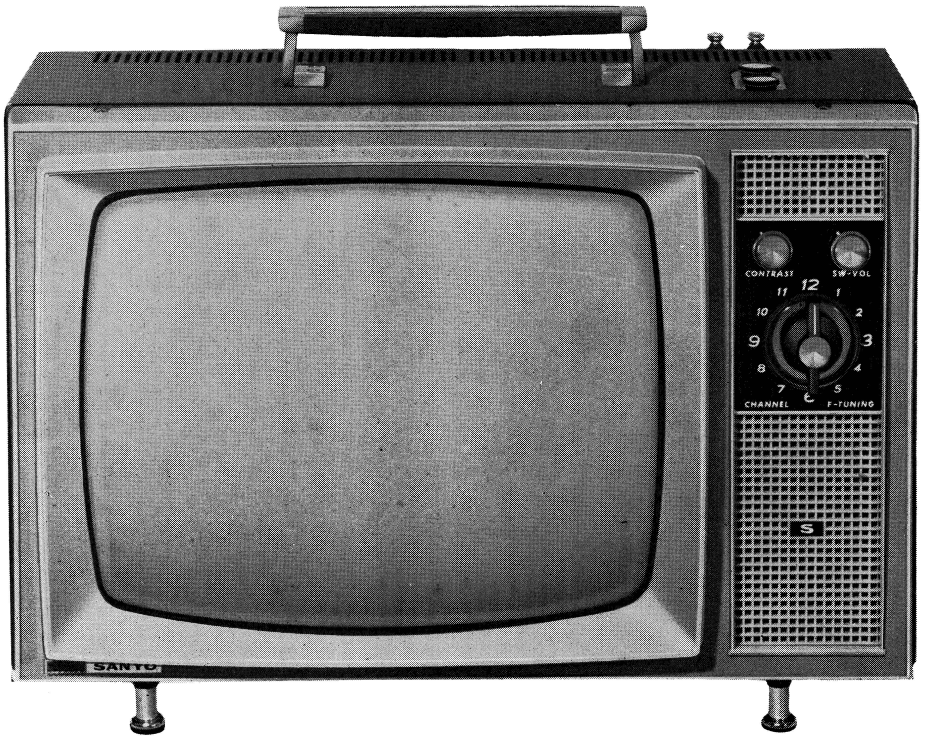

SANYO ELECTRIC CO., LTD.

1 SPECIFICATIONS

Voltage	Local voltage		
Channel	To order (Refer to "Television system of the world")		
Intermediate frequency		WE system	WW system
	Picture	27.75Mc/s	26.75Mc
	Sound	22.25Mc	22.25Mc
Audio output	2 watts		
Loud-speaker	70×110mm		
Antenna input impedance	300 ohms balanced		
Video response	WE system ····· Flat up to 4.5Mc		
	EE system ····· Flat up to 5.5Mc		
Cabinet dimensions	Width 508mm		
	Height 394mm		
	Depth 304mm		
Net weight	18kg (39.5 lbs)		

TUBE AND PICTURE TUBE

RF AMP	3D-HH13
OSC & MIX	5M-HH3
VIDEO IF AMP	3CB6×2
	3DK6
VIDEO DET	1N60
VIDEO AMP	12BY7A
SOUND IF AMP	3CB6, ½5U8
SOUND DET	1N60×2
AUDIO AMP	4MP12
SYNC SEP & AMP	12BH7A
VERT OSC & OUTPUT	9R-AL1
HOR OSC & AFC	12BH7A
HOR OUTPUT	12BB14
DAMPER	12RK19
H. V. RECT	1×2B
PICTURE TUBE	400CB4

2 OVERALL DIMENSIONS AND CONTROLS

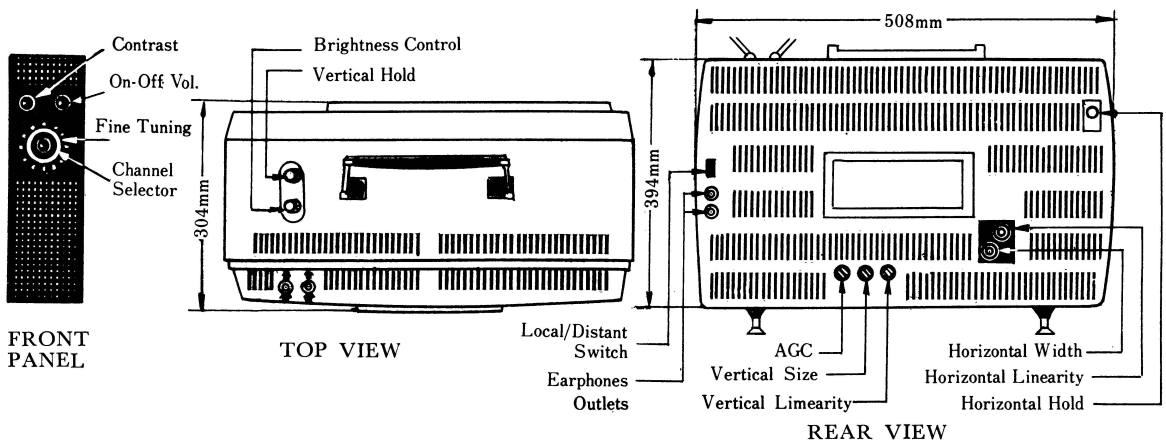

3 BLOCK DIAGRAM

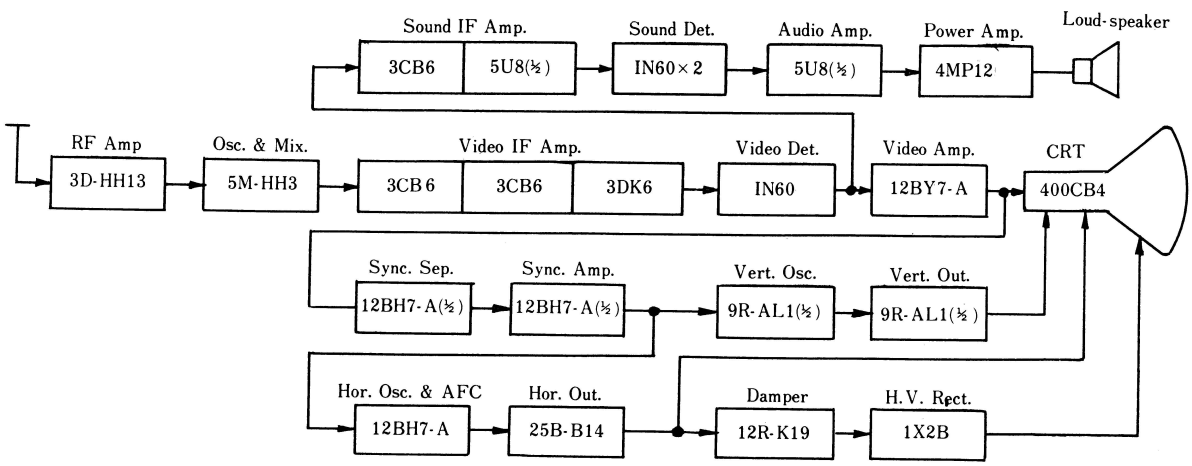

CONTENTS

1 SPECIFICATIONS
2 OVERALL DIMENSIONS AND CONTROLS
3 BLOCK DIAGRAM
4 REMOVING THE FRONT PANELS
5 CHASSIS REMOVAL
6 INDOOR ANTENNA
7 OUTDOOR ANTENNA
8 STANDARD TABLE OF TUBE
9 SPARE PARTS LIST
10 RE-ADJUSTMENT
11 CIRCUIT DIAGRAM

4 REMOVING THE FRONT PANEL

(1) Remove the channel selector knob, fine tuning knob and the small knobs.

(2) Remove the front panel by loosening 4 philips-head screws.

5 CHASSIS REMOVAL

(1) Remove the channel selector knob, the fine tuning knob, two top small knobs and front panel.

(2) Remove the back cover by loosening the 6 philips-head screws.

(3) Remove the picture tube socket, the speaker plug, the CRT grounding wire, the deflection yoke plug, the H.V. Lead and power transformer plug.

(4) Loosening the 6 philips-head screws on the cabinet. (Refer to Fig. 1)

(5) Remove the 4 nuts holding the chassis. (Refer to Fig. 2)

6 INDOOR ANTENNA

for use in normal signal areas

Extend dipoles fully so that antenna can be freely in all direction.

Adjust the length, direction and angle of antenna while viewing screen to obtain best picture quality.

Lower-number channels will reqier longer antenna, whereas higher-number channels will require shortening of antenna.

Re-orientation of antenna may be necessary if selection of another channel is from a station in a different direction.

7 OUTDOOR ANTENNA

for use in fringe areas

In fringe area an original antenna is necessary.

The feeder from the outdoor antenna should be connected to top screw terminals of the dipoles.

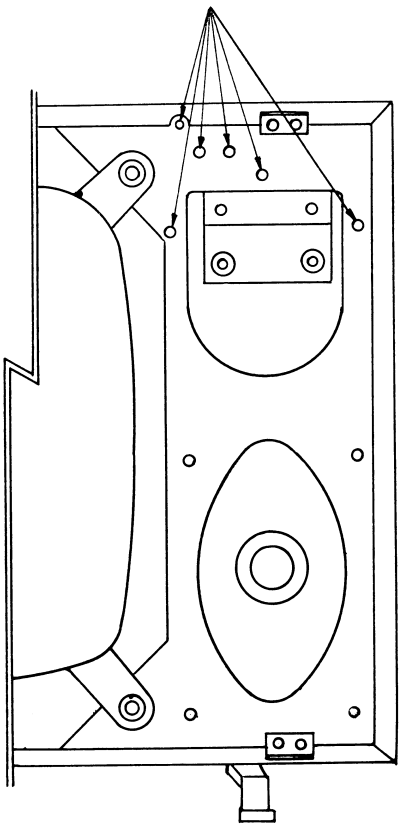

Fig. 1

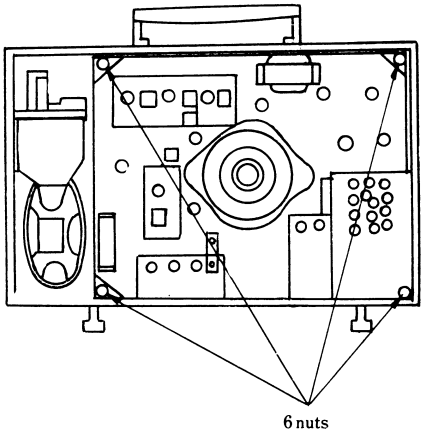

Fig. 2

① No. 1 waveform alignment

a. Connect "INPUT" terminal on sweep generator to TP–B.
b. Connect "OUTPUT" terminal on sweep generator to V2 Pin 1.
c. Set "BLANKING" switch on sweep generator to "OFF" and adjust "PHASE" control on oscilloscope so that only one response curve is appeared. Then "BLANKING" switch backs to "ON" position.
d. Adjust S24G so as to sweep 22.25Mc marker signal.
e. Adjust S18G and S04Gb to obtain the response curve of fig–2.

② No. 2 waveform alignment

a. Connect "OUTPUT" terminal on sweep generator to V1 Pin 1.
b., c., d. is same as 3.1).
c. Adjust S04Ga to obtain the response curve of fig–3.

③ No. 3 waveform alignment

a. Connect "OUTPUT" terminal on sweep generator to TP–A.
b. Set the channel selector to a no-station and adjust S1502 so as to sweep 29.582Mc* (adjecent channel trap) marker signal.
c. Reset the channel to No. 5 (or No. 7), then adjust converter coil of tuner and S1004 to obtain the response curve of fig–4.
d. Readjust S04Ga, A04Gb and S18G, if not to obtain the waveform of fig–4.
* European channel. If American channel, 28.25Mc.

④ Local frequency and RF–IF overall waveform alignment

a. Switch on the set.
b. Connect "OUTPUT" terminal on sweep generator to antenna terminal through attenuater.
c. Connect "OUTPUT" terminal on sweep generator to TP–B in fig–1.
d. Turn the AGC control fully to counter-clockwise and apply–3V bias to AGC (point "C" in fig–1),
e. Set the fine tuning knob at about 120° clockwise turn from full counter-clockwise rotation.
f. Set "BLANKING" switch on sweep generator to "OFF" and adjust "PHASE" control on oscilloscope so that only one response curve is appeared. Then "BLANKING" switch on sweep generator backs to "ON" position.
g. Tuner channel set to be the same as on sweep generator channel rang.
h. Repeat the steps for all other channel.

Remarks: If a flat response curve of fig–5 cannot be obtained for all channel, converter coil S07, S04Ga, S04Gb and S18G may be readjusted.
If error of waveform is irregular, don't adjust local frequency adjuster screw. In this case, readjust the RF waveform because of random waveform error of tuner itself.

HORIZONTAL SCANNING FREQUENCY ALIGNMENT

Equipment: DC amplifer type oscilloscope
AGC power source

Procedure

(1) Set the oscilloscope as follows:
"DIR··· AMP"·····AMP position for both vert. & hor.
"Vert. Rang" ·····0.1 on the left.
"Sweep" ·····7Kc
"Sync." ·····INT-
"Hor. Gain"·····Scope amplitude of approx. 10cm.

(2) Feed signal of television to antenna terminal.

(3) Set channel to No. 5 (or No. 7) connect AGC power source (−3) to point "B".

(4) Connect the Monoscope of video signal to point "A".

(5) Connect "INPUT" terminal on oscilloscope to point "C" through 5pF capacitor.

(6) Observing the picture, rotate horizontal hold control knob (horizontal oscillation coil) to obtain horizontal synchronization.

(7) Adjust enough vertical amplitude of the waveform on oscilloscope.

(8) Adjust sweep vernier so that three full waveforms can be observed on the scope.

(9) Adjust horizontal stabilizer coil to obtain the waveform shown in fig-10.

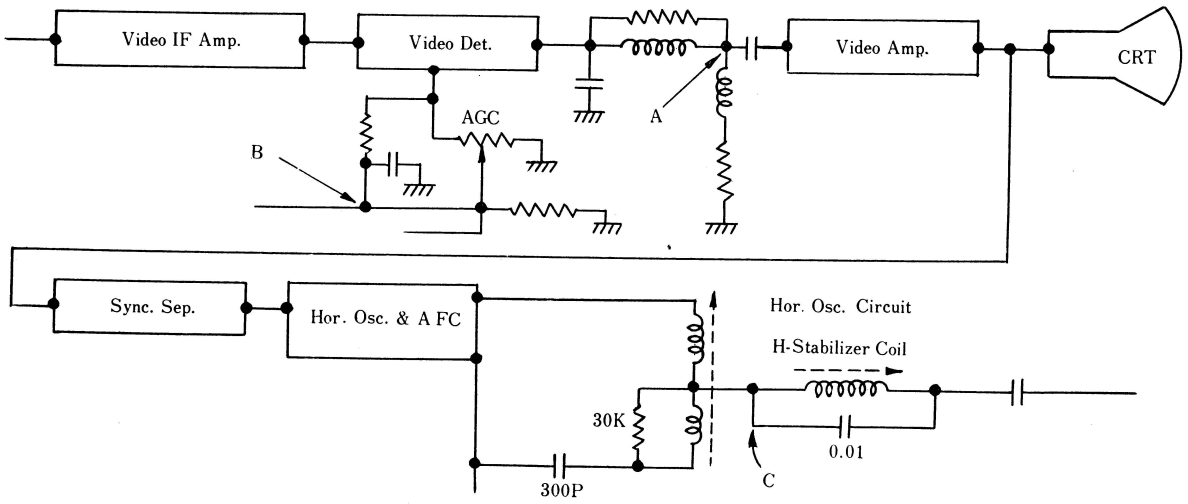

Fig. 9 Connecting point of lead wier

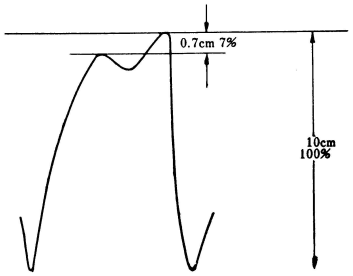

Fig. 10 Waveform of Horizontal stabilizer coil

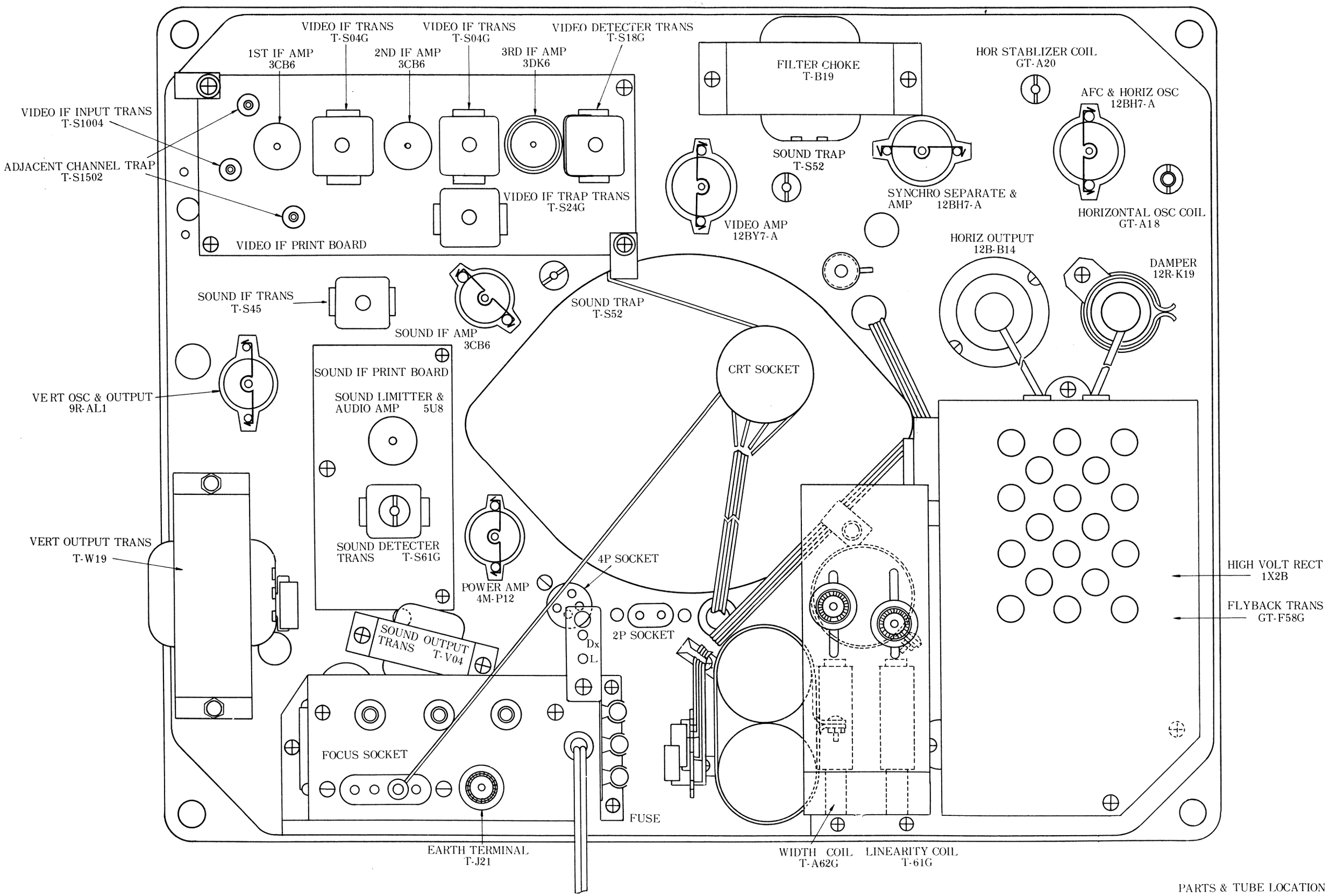

PARTS & TUBE LOCATION

Model 16-PS2

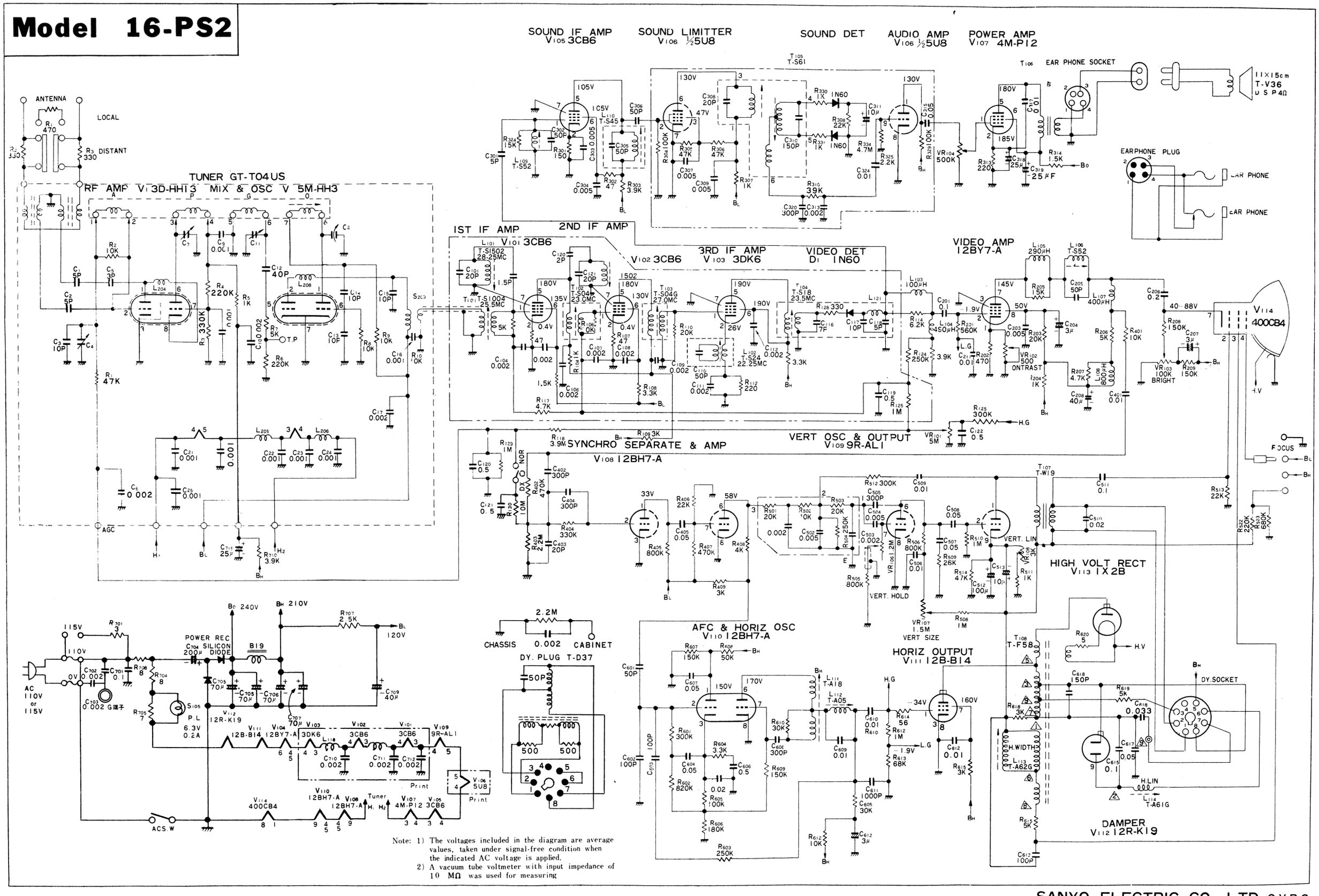

Note: 1) The voltages included in the diagram are average values, taken under signal-free condition when the indicated AC voltage is applied.
2) A vacuum tube voltmeter with input impedance of 10 MΩ was used for measuring

MODEL 16-PS2

SPECIFICATIONS

POWER SOURCE	115/110 volts, 50 c/s
POWER CONSUMPTION	130 watts
CHANNEL	US channel
INTERMEDIATE FREQUENCY	video 26.75 mc sound 22.25 mc
AUDIO OUTPUT	2.0 watts
SPEAKER	4"X6" oval type
ANTENNA INPUT IMPEDANCE	300 ohms balanced
VIDEO RESPONSE	flat up to 3.5 mc
PICTURE TUBE	16" 114° deflection
TUBES USED	16 tubes (incl. pict ure tube) 3 diodes
CABINET DIMENSIONS	19¾" wideX12¾" deepX12½" high
NET WEIGHT	35¾ lbs approx.

O.V. P-3

VIDEO IF RESPONSE CURVES

(1) Western European Standards (E channel) and World Wide Standards (US channel).

Note: # Marked values for Westerns European Channels.

(2) Overall Response Curve

Note: Slope and hollow of waveform should be adjusted above allowance.

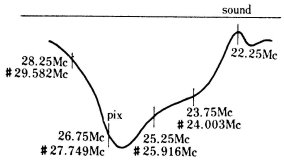

Fig. 2 No. 1 waveform

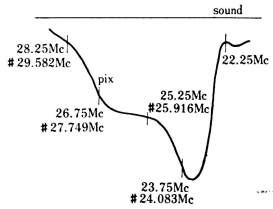

Fig. 3 No. 2 waveform

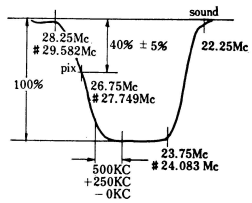

Fig. 4 No. 3 waveform

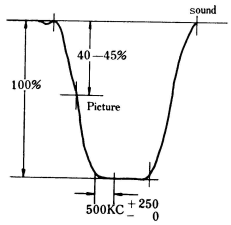

Fig. 5

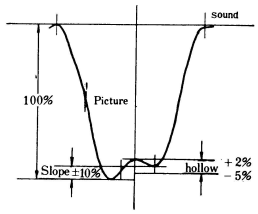

Fig. 6

VIDEO IF ALIGNMENT

(1) Equipment: Sweep Generator (Video IFT adjuster)
Marker Generator
TV Oscilloscope
AGC Power source

(2) Preliminary instructions

a) Set the Oscilloscope as follows:
"Vert. input" X10
"Sweep Range" .....Line sweep
"Hor. gain" .....Scope amplitude approx. 10cm.
"Vert. gain".....2

b) Set "Input atten" on sweep generator to "X 1."

c) Connect the "To scope" terminal on sweep generator and "Vert. input" terminal on Oscilloscope with coaxial lead (75 ohm).

(3) Procedure

* Switch on the set (voltage within an allowance of ± 5 volt).
* Turn the AGC control knob fully to counter-clockwise.
* Connect output lead wire (−3V) on AGC power source to point "C".
* Set the channel selector to No. 5 (or No. 7).

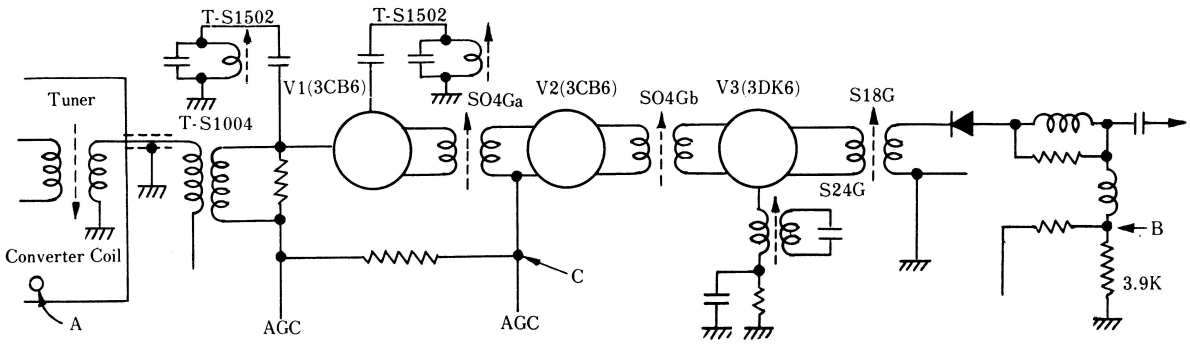

Fig. 1 Connecting point of lead wire

8 STANDARD TABLE OF TUBES

Model	Application	Ef (V)	If (A)	Ep (V)	Eg_1 (V)	Eg_2 (V)	Ip (mA)	Ig_2 (mA)	rp (kΩ)	gm (μΩ)	μ	R_2 (Ω)	Type
1X2B	High voltage rectifier	1.25	0.2	absolute max peak plate voltage 22000V, DC output current max 0.5mA, max peak plate current 45mA									1X2B
3AL5	Detector duo diode	3.15	0.6	absolute max peak plate voltage 330V, DC output current max 0.5mA, max peak plate current 45mA									3AL5
3CB6	H.F. amp pentode	3.15	0.6	200	Rk=180Ω	150	9.5	28	600	6,200	—	—	3CB6
3D-HH13	H.F. amp duo triode	3.15	0.6	165	−0.5	—	16.5	—	3.8	13,000	36	—	3D-HH13
3DK6	H.F. Amp pentode	3.15	0.6	125	Rk=56Ω	125	12	3.8	350	9,800	Ec_1=6.5V (Ik=20μA)		3DK6
5M-HH3	Mix, & Osc. picture amp duo triode	4.7	0.6	100	−1	—	11.0	—		7,500	38	each triode	5M-HH3
5U8	H.F. triode pentode	4.7	0.6	250 150	Rk=68Ω Rk=56Ω	110	10 18	3.5	400 5	5,200 8,500	— 40	pentode triode	5U8
4M-P12	Audio amp triode pentode	4.7	0.6	180	−6	180	25	5	—	5,500			4M-P12
9R-AL1	Vert Osc & amp duo triode	9.0	0.6	250 250	−10.5 −11	— —	22 5	— —	— —	6,700 2,000	16.5 17.5	unit 2 unit 1	9R-AL1
12BH7-A	AFC & Horiz Osc duo triode	6.3	0.6	DC max plate voltage 450V, positive peak plate voltage max 1500V, max plate current 20mA, plate dissipation 3.5W									12BH7-A
12BY7-A	Video amp pentode	6.3	0.6	250	Rk=100Ω	180	26	575	93	1100	1200		12BY7-A
12B-B14	Hor. output pentode	12.6	0.6	max DC plate voltage 700V, max cathode current 200mA positive peak plate voltage 7000V									12B-B14
12R-K19	Damper	12.6	0.6	adsolute max peak plate voltage 5500V, max output current 220mA max peak plate current 1300mA, max plate dissipation 6.5W									12R-K19

Ep plate voltage — Ip plate current — gm mutual conductance — Ef heater voltage — Ik cathode current
Eg_1 gride voltage — Ig_2 screen currnet — μ amplification factor — If heater current
Eg_2 screen voltage — rp plate resistance — R load resistance — EC_1 first gride DC voltage

Guide of Valve base

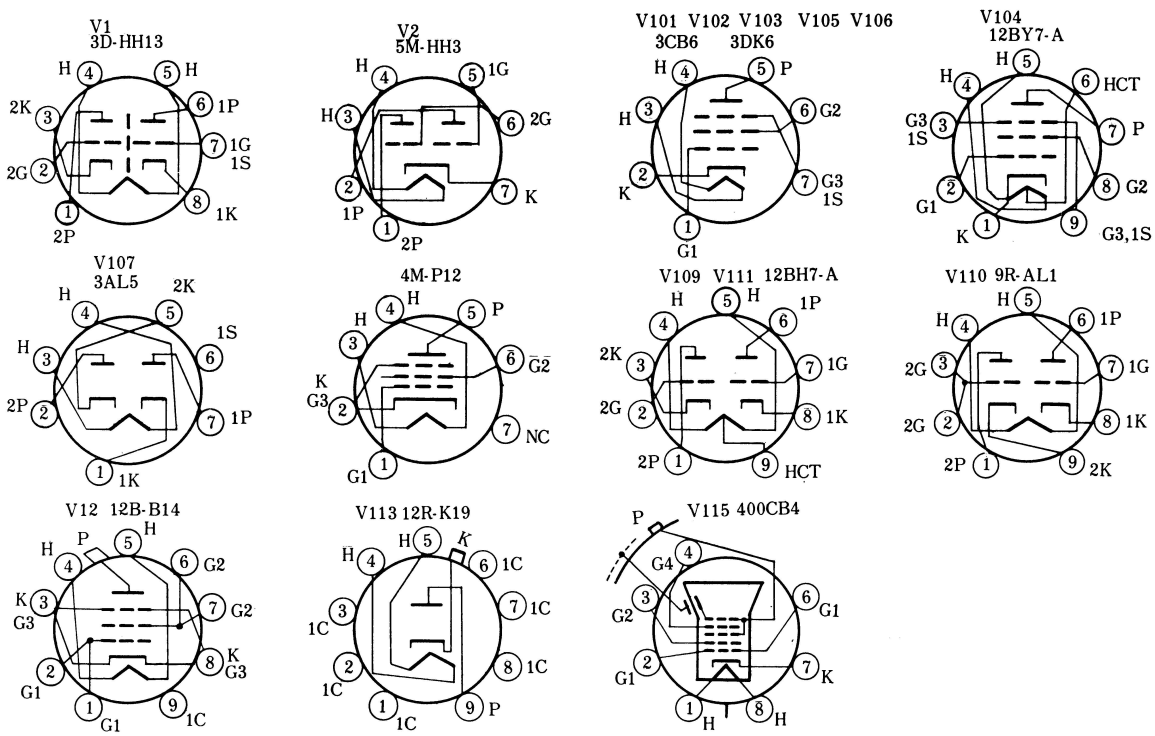

9 SPARE PARTS LIST

Cabinet Parts

Stock No.	Description
GT-11241	Cabinet assembly
GT-31113	Escutcheon assembly
GT-31112	Back cover
GT-37006	Safety glass
GT-27011	Leg set
GT-27013	Handle

Knobs

Stock No.	Description
GT-31134	Channel selector knob
GT-31117	Fine tuning knob
GT-31119	Contrast & volume control knob
GT-31120	Bright & V-Hold knob

Electrical Components

Stock No.	Description
T-A20	Horizontal stabilizer coil
T-A18	Horizontal OSC coil
T-A62G	Width coil
T-A61G	Horizontal linearity coil
GT-F58G	Fly back transformer
GT-L111	Peaking coil 100μH 5k ohm
GT-L112	〃 490μH
GT-L113	〃 290μH 13k ohm
GT-L114	〃 800μH 4.7k ohm
GT-L109	〃 400μH
T-S04G	Video I.F. transformer
T-S1004	Video I.F. input transformer
T-S24G	Video I.F. trap
T-S61G(E)	Sound detector transformer
T-S18G	Video detector transformer
T-S1502	Adjacent channel trap
T-S52(E)	Sound trap
T-T04(E) (us)	Tuner
T-V36	Loud speaker
T-V04	Sound output transformer
T-W19	Vertical output transformer
T-B19	Filter choke
T-S45(E)	Sound IF transformer
GT-P51	Power transformer
T-E0026	Picture tube socket
T-E1024	Silicon rectifier
T-E0313	Earphone MPB

Valves and Picture

Stock No.	Description
T-Q3017	IX2B
T-Q3015	3CB6
T-Q3110	12BY7-A
T-Q3111	5U8
T-Q3113	12BH7-A
T-Q3124	5M-HH3
T-Q3129	3DK6
T-Q3140	12R-K19
T-Q3143	3D-HH13
T-Q3155	9R-AL1
T-Q3107	4MP12
T-Q9021	400CB4

Variable Resistors

Stock No.	Description
GT-G1631	A-500k ohm (Switch with Volume)
GT-G1632	E-500 ohm (Contrast)
GT-G1033	B-3k ohm (Vert size)
	B-1.5M ohm (Vert line)
	B-5M ohm (AGC)
T-G1608	B-100k ohm (Bright)
T-G1609	B-1.2M ohm (V-hold)

Electrolytic Capacitors

3 μF	300WV
10 μF	50WV
10 μF	500WV
25 μF	25WV
150 μF	350WV
20+20+40 μF	300WV
70+70+70 μF	300WV

Wire Wound Resistors

3 ohm	10W
2.5K ohm	5W
8 ohm	5W

10 RE-ADJUSTMENT

SOUND IF ALIGNMENT

(1) Equipment:

Signal Generator (sound IFT adjuster)
VTVM (Vacuum tube voltmeter)
Marker Generator
Converter switch

(2) Lead connection

Connect the lead wire in accordance with the following order:

a) Red lead wire (C) to point "A" through 10K ohm (½P) resistance.
b) Red lead wire (E) on VTVM to point "B".
c) Yellow lead wire (F) on VTVM to point "C".
d) Blue lead wire (D) on VTVM Detector to point "D".
e) Black lead wire (A) to point "D".
f) Blue or black lead wire (B) to the closest earth lug to point "E".

(3) Procedure

a) Set the signal frequency to 4.5Mc for World Wide Standards or 5.5Mc for Western European Standards Channels.
b) Set the converter switch to VB side.
c) Put on the signal generator and VTVM, then earth the VTVM lead wire (red) to chassis. Adjust VR on the converter switch to obtain accurate zero adjustment both ZERO (Center Zero) and IF-L.
d) Set the converter switch to IF-M and adjust output control on signal generator.
e) Adjust lower core of S-52 (A) E, S45GE and S61GE to maximum indication on VTVM.
f) Set the converter switch to zero, then adjust the upper core of S61G to zero indication on VTVM.
g) Set the converter switch to VIDEO TRAP and adjust core S-52(B) minimum indication on VTVM.
h) Repeat the proceding steps for more accurate alignment.

Remarks: On the proceding steps (4), note that detector with the following circuit is connected on blue lead wire.

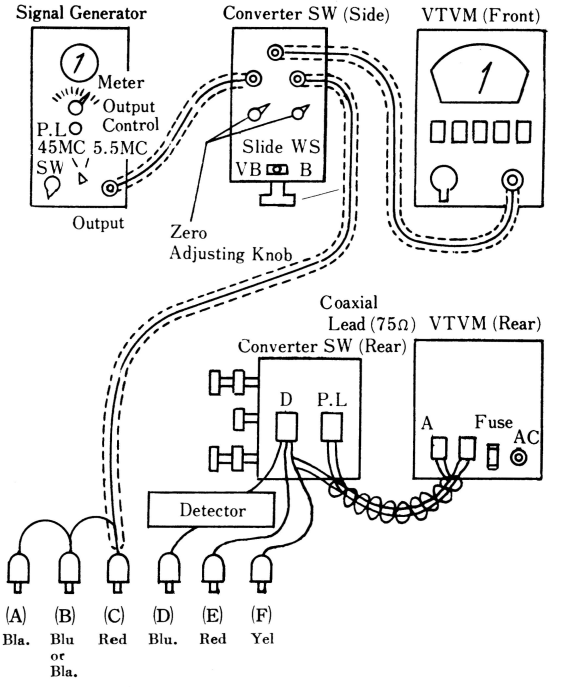

Fig. 7 Equipment Connection

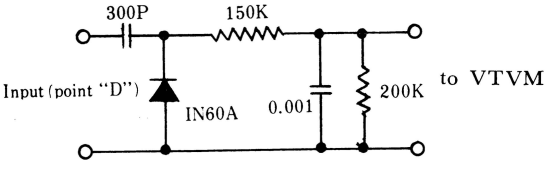

Detector Circuit

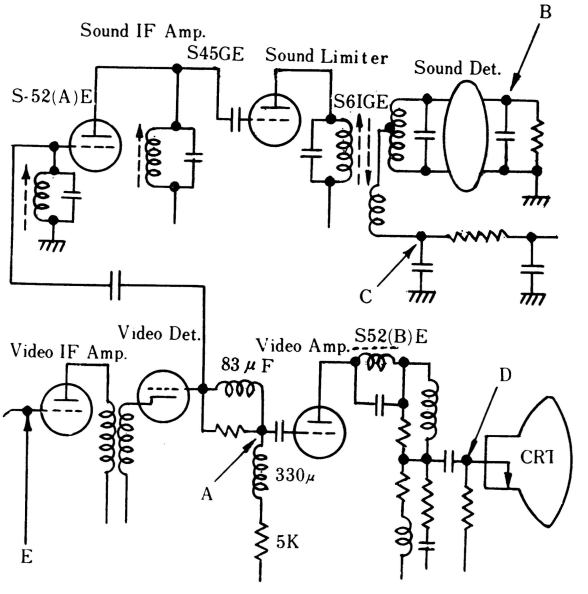

Fig. 8 Connecting point of lead wire

MODEL 16-PS2

SPECIFICATIONS

POWER SOURCE	220/110 volts, 50 c/s
POWER CONSUMPTION	US channel
CHANNEL	130 watts
INTERMEDIATE FREQUENCY	video 26.75 mc
	sound 22.25 mc
AUDIO OUTPUT	2.0 watts
SPEAKER	4"X6" oval type
ANTENNA INPUT IMPEDANCE	300 ohms balanced
VIDEO RESPONSE	flat up to 3.5 mc
PICTURE TUBE	16" 114° deflection
TUBES USED	16 tubes (incl. picture tube)
	3 diodes
CABINET DIMENSIONS	19 ¾" wideX12¾" deepX12½" high
NET WEIGHT	39½ lbs approx.

Model 16-PS2

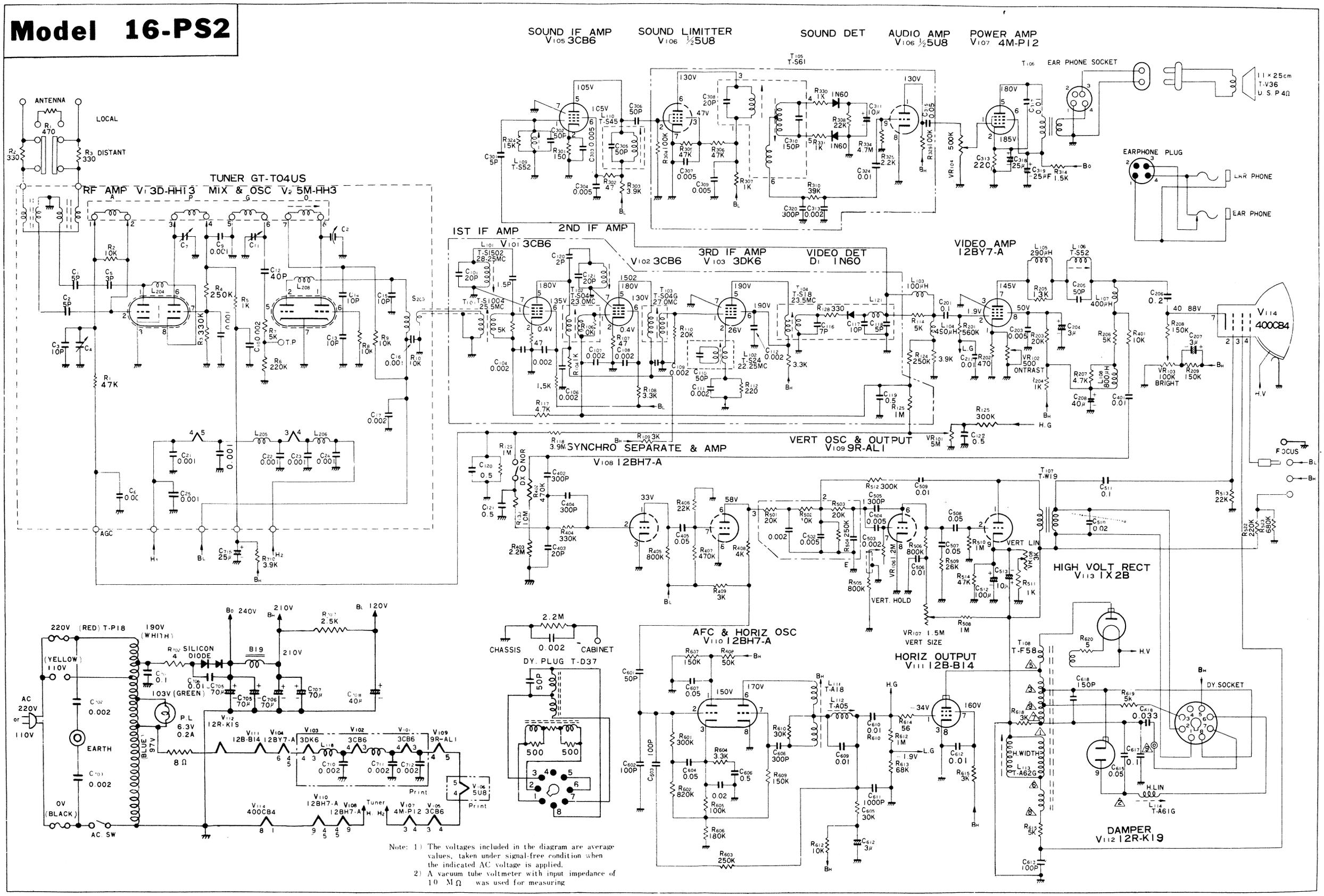

Note: 1) The voltages included in the diagram are average values, taken under signal-free condition when the indicated AC voltage is applied.
2) A vacuum tube voltmeter with input impedance of 10 MΩ was used for measuring

MODEL 16-PS2

SPECIFICATIONS

POWER SOURCE	230 / 110 volts, 50 c / s
POWER CONSUMPTION	130 watts
CHANNEL	Europe channel
INTERMEDIATE FREQUENCY	video 27.75 mc sound 22.25 mc
AUDIO OUTPT	2.0 watts
SPEAKER	4″ × 6″ oval type
ANTENNA INPUT IMPEDANCE	300 ohms balanced
VIDEO RESPONSONSE	flat up to 4.5 mc
PICTURE TUBE	16″ 114° deflection
TUBES USED	16 tubes(incl. picture tube) 3 diodes
CABINET DIMENSIONS	19 $\frac{3}{4}$″ wide × 12 $\frac{1}{4}$″ deep × 12 $\frac{1}{2}$″ high
NET WEIGHT	39 $\frac{1}{2}$ lbs approx.

N. E-3

Model 16-PS2

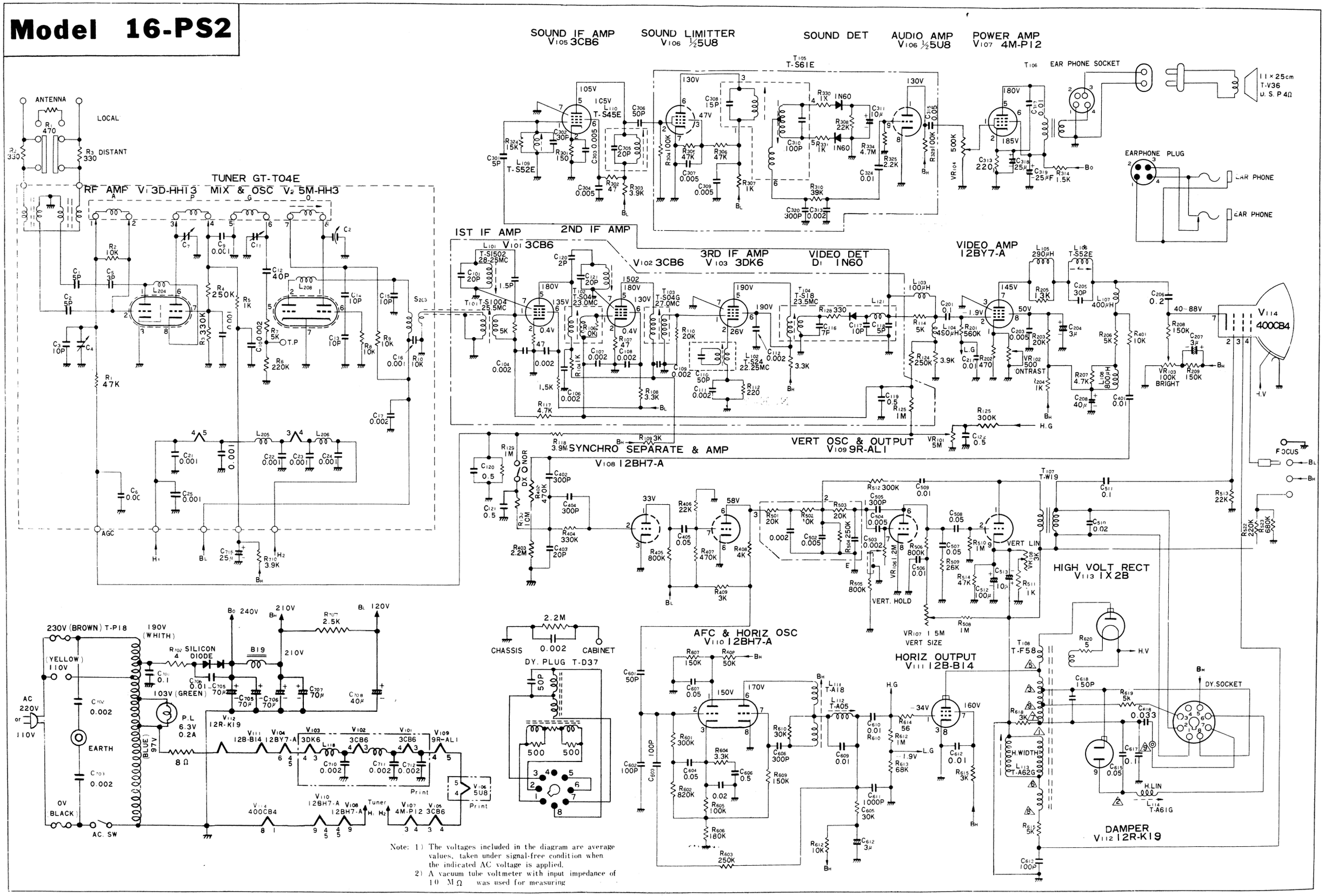

Note: 1) The voltages included in the diagram are average values, taken under signal-free condition when the indicated AC voltage is applied.
2) A vacuum tube voltmeter with input impedance of 10 MΩ was used for measuring

MODEL 16-PS2

SPECIFICATIONS

POWER SOURCE	220 / 110 volts, 50 c / s
POWER CONSUMPTION	130 watts
CHANNEL	Europe channel
INTERMEDIATE FREQUENCY	video 27.75 mc sound 22.25 mc
AUDIO OUTPUT	2.0 watts
SPEAKER	4″ × 6″ oval type
ANTENNA INPUT IMPEDANCE	300 ohms balanced
VIDEO RESPONSE	flat up to 4.5 mc
PICTURE TUBE	16″ 114° deflection
TUBES USED	16 tubes (incl. picture tube) 3 diodes
CABINET DIMENSIONS	19 $\frac{3}{4}$″ wide × 12 $\frac{1}{4}$″ deep × 12 $\frac{1}{2}$″ high
NET WEIGHT	39 $\frac{1}{2}$ lbs approx.

Model 16-PS2

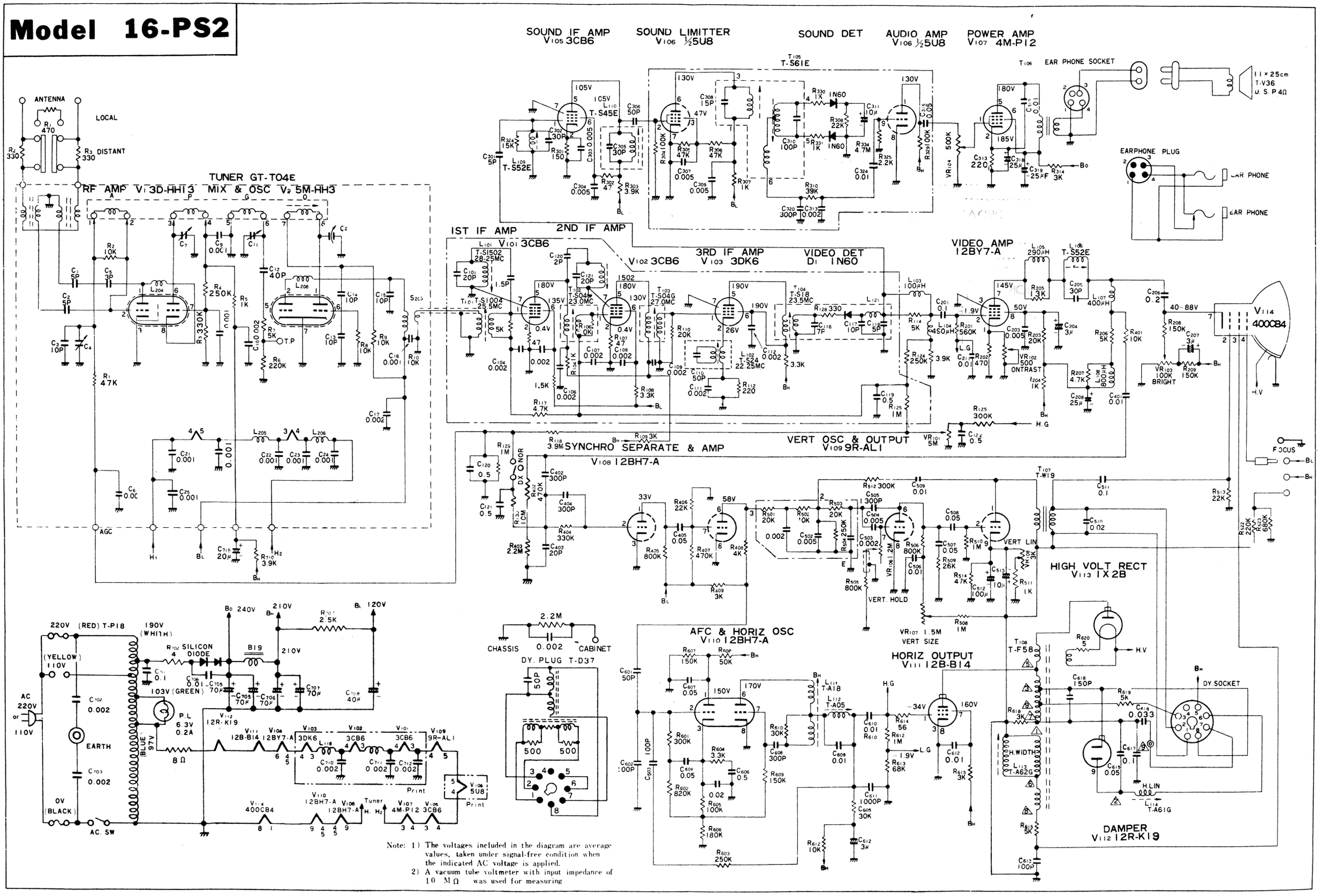

Note: 1) The voltages included in the diagram are average values, taken under signal-free condition when the indicated AC voltage is applied.
2) A vacuum tube voltmeter with input impedance of 10 MΩ was used for measuring

MODEL 16-PS2

SPECIFICATIONS

POWER SOURCE	220 volts, 50 c/s
POWER CONSUMPTION	130 watts
CHANNEL	European channel
INTERMEDIATE FREQUENCY	video 27.75 mc sound 22.25 mc
AUDIO OUTPUT	2.0 watts
SPEAKER	4″×6″ oval type
ANTENNA INPUT IMPEDANCE	300 ohms balanced
VIDEO RESPONSE	flat up to 4.5 mc
PICTURE TUBE	16″ 114° deflection
TUBES USED	16 tubes (incl. picture tube) 3 diodes
CABINET DIMENSIONS	$19\frac{3}{4}$″wide×$12\frac{1}{4}$″deep×$12\frac{1}{2}$″high
NET WEIGHT	$38\frac{1}{4}$ lbs approx.

Model 16-PS2

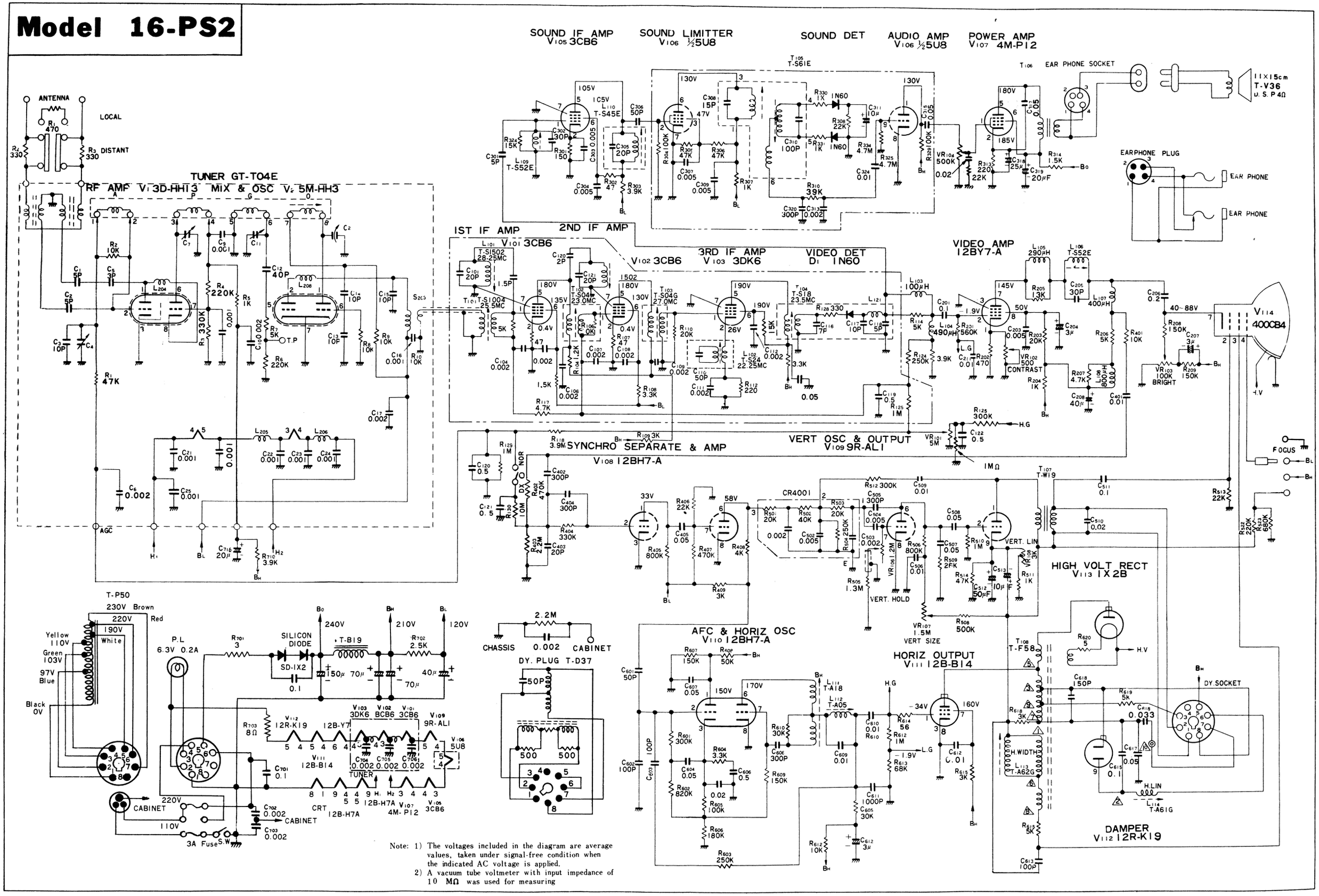

Note: 1) The voltages included in the diagram are average values, taken under signal-free condition when the indicated AC voltage is applied.
2) A vacuum tube voltmeter with input impedance of 10 MΩ was used for measuring

PARTS LIST

Ref. No.	Part No.	Description	Q'ty
MECHANISM			
1	R-128229	Lug, head lead-wire holding	1
2	R-S6984	Erase head	1
3	R-248551	Pedestal, erase head mtg.	2
4	R-S88793	Head slide assembly	1
5	R-158419	Tension spring, slide backing	1
6	R-119567	Lock slide	1
7	R-158316	Pressure spring, lock slide backing	1
8	R-248416	Boss, lock slide fixing	2
9	R-S88794	Chassis assembly	1
10	R-158403	Tension spring, push button backing	5
11	R-119816	Lever, push button attaching	5
12	R-AT16801	Push button assembly, REC	1
	(R-328254)	(Push button (Red))	(1)
	(R-268804)	(Metal ornament (Red))	(1)
13	R-AT16802	Push button assembly	4
	(R-328254)	(Push button)	(4)
	(R-268804)	(Metal ornament)	(4)
14	R-S88839	Pinch lever assembly	1
15	R-158155a	Pressure spring, pinch lever	1
16	R-128218	Plate spring, slide holding	1
17	R-S6983	R/P head	1
18	R-158154	Pressure spring, R/P head mtg.	1
19	R-248522	Pedestal, R/P head mtg.	1
20	R-248550	Spacer, head slide mtg.	2
21	R-128219b	Plate spring, cassette holdng	1
22	R-128118a	Spring, FWD lever backing	1
23	R-S88620	FWD lever assembly	1
24	R-24670	Spacer, FWD lever mtg.	1
25	R-248243	Nut, bearing assembly mtg.	1
26	R-S88286	Bearing assembly, flywheel	1
27	R-S88795	Bracket assembly, flywheel mtg.	1
28	R-S4919a	Spring switch, play power	1
29	R-448142	Belt, flywheel drive	1
30	R-S88281	Flywheel assembly	1
31	R-448060a	Belt, FWD/REW drive	1
32	R-S3063	Lug, motor grounding	1
33	R-278103	Motor pulley	1
34	R-448089	Rubber cushion (white), motor	2
35	R-448056	Rubber cushion (black), motor	2
36	R-119101a	Bracket, motor mtg.	1
37	R-S5209	Motor	1
38	R-S4939	Spring switch, S1	1
39	R-258051	Metal pedestal	1
40	R-398078	Pulley, take up	1
41	R-448059	Belt, take up	1
42	R-S88284	Reel spindle assembly (right)	1
a	(R-398075)	(Reel spindle)	(1)
b	(R-448058)	(Tire)	(1)
c	(R-128083)	(Coil spring)	(1)
d	(R-328038)	(Ring)	(1)
e	(R-328087a)	(Cap)	(1)
43	R-398077	Pulley, FWD.	1
44	R-248420	Spacer, REW lever mtg.	2
45	R-119098a	FWD. lever	1
46	R-119084	REW. lever	1
47	R-398076	Pulley, REW.	1
48	R-248418	Spacer, FWD. lever mtg.	1
49	R-S88621	Lever assembly, REW. Pulley	1
50	R-158319b	Coil spring, FWD. operating	1
51	R-158320a	Tension spring. REW. operating	1
52	R-238027a	Hinge	1
53	R-128099a	Shaft, hinge fixing	1
54	R-S88294	Bracket assembly, reel spindle	1
55	R-AT16803	Plate spring assembly, back tension	1
	(R-258049)	(Plate spring)	(1)
		(Felt washer 3 × 7 × 1 mm)	(1)
56	R-258053a	Plate spring, winding clutch	1
57	R-158152	Pressure spring, left spindle	1

Ref. No.	Part No.	Description	Q'ty
MECHANISM			
58	R-398079	Pulley, under left spindle	1
59	R-S88295	Reel spindle assembly (left)	1
a	(R-398080)	(Reel spindle)	(1)
b	(R-128083)	(Coil spring)	(1)
c	(R-328038)	(Ring)	(1)
d	(R-328087a)	(Cap)	(1)
60	R-248420	Spacer, REC. slide mtg.	2
61	R-119403	Slide, REC.	1
62	R-158321	Tension spring, REC. slide backing	1
63	R-119554	Slide, anti-misrecording	1
64	R-248420	Spacer, anti-misrecording slide mtg.	1
65	R-119096	Lever, anti-misrecording	1
66	R-128292	Tension spring, anti-misrecording lever backing	1
101		Screw, PH 2 × 4 mm	2
102		Screw, PH 2 × 10 mm	4
103		Screw, PH 2.6 × 3 mm	2
104		Screw, PH 2.6 × 4 mm	1
105		Screw, PH 2.6 × 5 mm	6
106		Screw, PH 2.6 × 6 mm	2
107		Blank	
108		Screw, PH 3 × 4 mm	2
109		Screw, PH 3 × 6 mm	3
110		Screw, PH 3 × 8 mm	3
111		Screw, PH 3 × 16 mm	2
112		Screw, Head-less 2 × 4	1
113		Screw, FH 2.6 × 8	2
114		Tapping Screw, PH 3 × 10 mm	1
115		Spring washer 2 mm	5
116		Spring washer 2.6 mm	11
117		Spring washer 3 mm	11
118		Washer 2.6 mm	2
119		Washer 2.6 × 7.5 × 0.5 mm	7
120		Washer 3 × 10 × 1 mm	2
121		Washer 3 × 10 × 0.5 mm	4
122		Washer Nylon 1.9 × 7 × 0.5 mm	1
123		Washer Nylon 2 × 4 × 0.25 mm	3
124		Washer Nylon 2 × 4 × 0.5 mm	3
125		Washer Felt 6 × 14 × 1 mm	2
126		Washer Fyber 5.2 × 13 × 1 mm	1
127		Toothed washer 2.6 mm	1
128		External "E" ring 1.5 mm	4
129		External "E" ring 1.9 mm	1
130		External "E" ring 4 mm	1
131		Nut 3 mm	2
132		Steel ball 3.175 mm	1
133		Steel nall 2 mm	1
134		Eyelet 3 × 4 mm	2