CASSETTE RECORDER 1530

SERVICE MANUAL

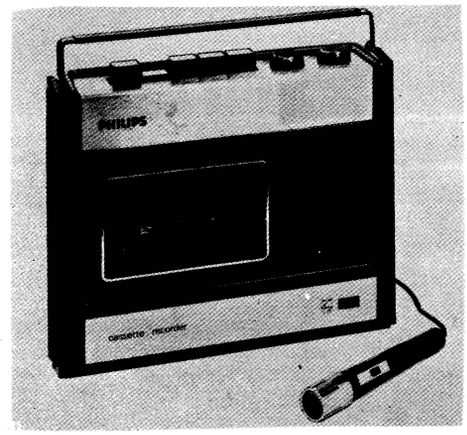

SPECIFICATIONS

Mains supply	240V. 50Hz.
Battery supply (4 x 1.5V., size 'C')	6V. D.C.
Tape speed	1.875 i.p.s. (4.76cm/sec.)
Tape width	0.150in. (3.8mm)
Track width	0.60in. (1.5mm)
Input sensitivity - mic.	less than 0.7mV.
- phono.	less than 160mV.
Input impedance - mic.	20K ohm.
- phono.	470K ohm.
Bias oscillator frequency	40KHz.
Frequency response	100-8000Hz.
Output power	650mW.
Loudspeaker impedance	8 ohms.
Overall dimensions	$9\frac{1}{4}$ x $7\frac{3}{4}$ x 3 inches (235 x 197 x 76mm)

TRANSISTORS.

Circuit Ident	Type	Code Number
Q 1	2SB 439 (AC 126)	410 001 0160
Q 2	2SB 54 (AC 128)	410 002 0121
Q 3	2SB 54 (AC 128)	410 002 0121
Q 4	2SB 54 (AC 128)	410 002 0121
Q 5	2SB 364	410 003 0180
Q 6	2SB 364	410 003 0180
Q 7	2SB 54 (AC 128)	410 002 0121
Q 8	2SB 324 (AC 128)	Motor control board
Q 9	2SC828 (BC 108)	Motor control board

DIODES.

Circuit Ident	Type	Code Number
D 1	20A - 90M (OA90)	412 001 0180
D 2	KS - 05	413 004 0140
D 3	KS - 05	413 004 0140
D 4	1S 12	Motor control board
D 5	1S 12	Motor control board

PHILIPS

PHILIPS INDUSTRIES LIMITED

Branches in all States

JUNE 1973

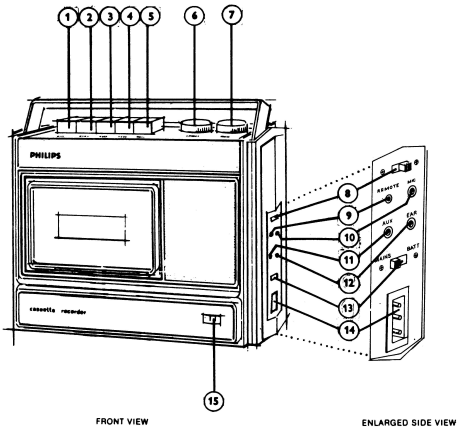

CONTROL	FUNCTIONS		
1	Stop-eject button	9	Remote jack
2	Play button	10	Microphone jack
3	Fast forward button	11	Auxiliary jack
4	Rewinding button	12	Earphone jack
5	Recording button	13	Mains/Battery switch
6	Tone control	14	Supply connection
7	Volume control	15	Battery indicator
8	Monitor on/off switch		

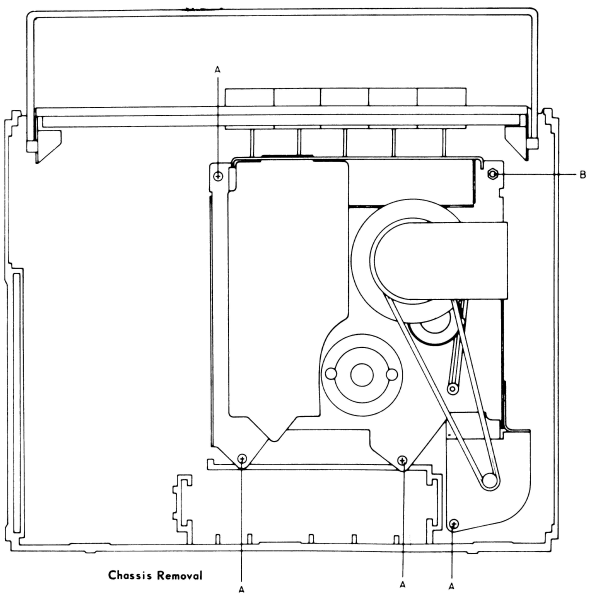

Chassis Removal

DISASSEMBLY INSTRUCTIONS

1. CABINET BACK

Remove the two Phillips-head screws in the back of the cabinet and the one located inside the microphone compartment. Lift the back clear.

2. CHASSIS

Refer to the figure above and remove the four screws identified "A" and the stud identified "B". The complete chassis may then be lifted clear.

NOTE: It should not be necessary to cut any leads inside the cabinet.

Reassembly is carried out in the reverse order.

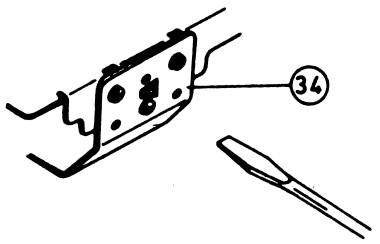

Fig. 1

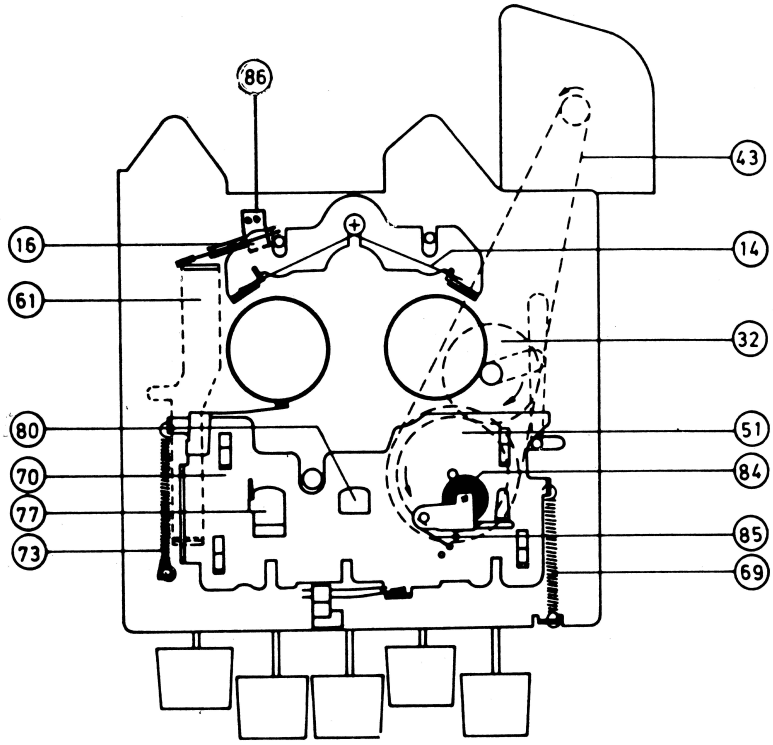

Fig. 2

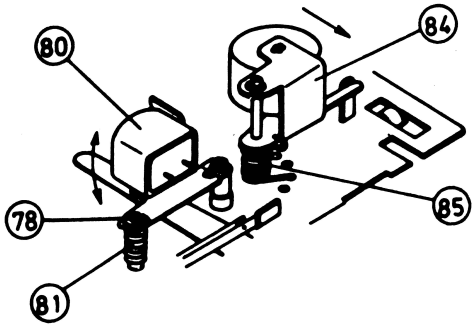

Fig. 3

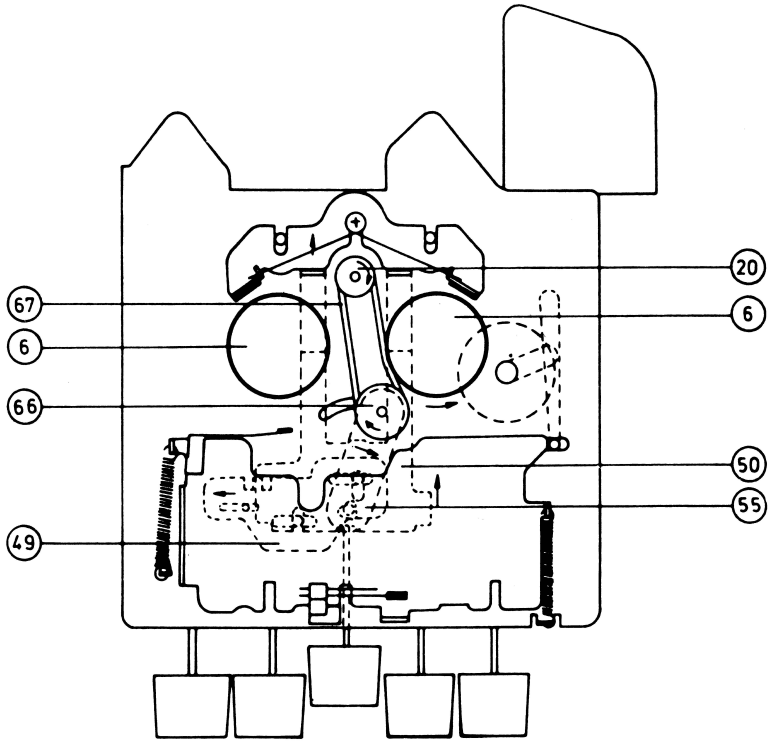

Fig. 4

MECHANICAL FUNCTION, REPAIR & ADJUSTMENTS

1. FUNCTION

Playback. (refer Mech. Assembly and Fig.2)
When the PLAY pushbutton is depressed the sliding sub-chassis assembly (70) carrying the erase head (77) and record/playback head (80), and the brake lever (50), are pressed downward. The following functions occur:-

(a) The brake arm assembly (16) is detached from the turntables and the leaf switch (64) turns on both the drive motor and the audio amplifier.

(b) The record/playback and erase heads are pressed against the tape and the pressure roller assembly (84) presses the tape against the capstan.

(c) Both turntables are released from the brake lever, allowing the tape to be wound on the take-up turntable (6).

(d) Flywheel (51), which is rotated by the drive motor (21) via belt (43), constantly transports the tape with its capstan shaft and also conveys its rotation to the take-up turntable via the take-up mechanism assembly (32).

Recording. (refer Mech. Assembly and Fig. 2)
(a) When recording, both the RECORD and the PLAY push-buttons must be depressed at the same time.

(b) Operation of the RECORD push-button causes the record lever assembly (61) to set the record/playback slide switch (SW4) to the 'record' position, and the leaf switch SW9 to the decreased monitor level position. (Note: SW9 not fitted in Cassette Recorder 1530).

(c) The arrangements for tape transport are identical with those for the playback mode.

Fast Forward. (refer Mech. Assembly and Fig.4)
(a) When the FAST-FORWARD push-button is depressed and held down, the FR plate assembly (49) slides to the left and turns on the FR switch (59). The brake lever (50) is pressed downwards, releasing the brake-arm from the turntables.

(b) The FR motor (20) turns clockwise during the fast-forward mode and the tape is rapidly wound on the take-up turntables.

(c) The slide of the FR plate assembly (49) swings the FR pulley assembly (55) clockwise and the FR drive belt (67) is pressed against the take-up turntable.

Rewind. (refer Mech. Assembly and Fig. 4)
(a) When the REWIND pushbutton is depressed and held down, the FR plate assembly (49) slides to the right and turns on the FR switch. The brake lever (50) presses downwards, releasing the brake-arm assembly (16) from the turntables.

(b) The FR motor (20) turns anti-clockwise and the tape is rapidly wound on to the supply turntable.

(c) The slide of the FR plate assembly (49) swings the FR pulley assembly (55) counterclockwise and the FR drive belt (67) is pressed against the supply turntable.

Stop/Eject Pushbutton.

(a) The first depression sets all functions in the "stop" position.

(b) The second depression opens the cassette holder by rotating the hook kick plate causing the coupling bar (41) to pull the hook assembly (40), and release the cassette holder (1).

2. REPAIR.

Drive belt replacement. (refer Mech. Assembly and Fig.1)
(a) Remove the three screws (22, 23) which hold the flywheel bracket assembly (34), and remove the drive belt (43).

(b) On reassembly, adjust the flywheel bracket by loosening the three screws and repositioning the bracket by means of a screwdriver inserted in the appropriate slot (Fig. 1).

Flywheel and Take-up Pulley Replacement. (refer Figs. 1 and 2)
(a) The flywheel (51) can be disengaged by removing the flywheel bracket (34), as above.

(b) To disengage the take-up pulley, remove ring (33), take-up spring (31), 'E' ring (19) and washer (18).

(c) Reassemble in the reverse order.

Cassette Holder. (refer Mech. Assembly)
(a) Open the cassette holder by depressing the STOP/EJECT pushbutton twice.

(b) Remove the mechanical chassis cover (2) and cassette spring (24) from the cassette holder bracket (25).

(c) Detach the ring (23) and the cassette holder shaft (27) from the holder bracket.

(d) Reassemble in the reverse order.

Fast Rewind Motor. (refer Mech. Assembly)
(a) Remove the cassette holder assembly (1).

(b) Remove the following parts in order specified:-
1. FR drive belt (67)
2. Screw (22) and spring washer (23)
3. Screw (10) and flat washer (11)
4. Brake arm spring (14) and brake arm collar (15).

(c) Remove motor (20) from chassis.

(d) Reassemble in the reverse order.

ADJUSTMENT.

Record/Playback Head. (refer Fig. 3)
1. Insert a test tape (Philips 4822 397 30005), modulated over its full length at 6,300 Hz, into the recorder.

2. Connect an A.C. VTVM to the line output.

3. Set the recorder in the 'playback' mode.

4. Adjust the azimuth adjustment spring (81) for max. output voltage.

5. Lockpaint the set-screw.

Pressure Roller Assembly. (refer Fig.3)
1. Depress the PLAY pushbutton.

2. Adjust the position of the pressure roller spring (85) by means of any one of the four holes at the base of the pressure roller shaft on the sliding sub-chassis, such that the force of the pressure roller is between 12-19 ounces (350-450 grams).

Speed Check.

This may be carried out with test tape 4822 397 30005 on which a 800Hz signal is imposed at intervals of 4.75m. Insert the tape and select 'playback' mode. The time between two 800Hz signals should be between 95 and 103 seconds. If this interval is less than 95 seconds, the speed is too high; if over 103 secs., the speed is too low.

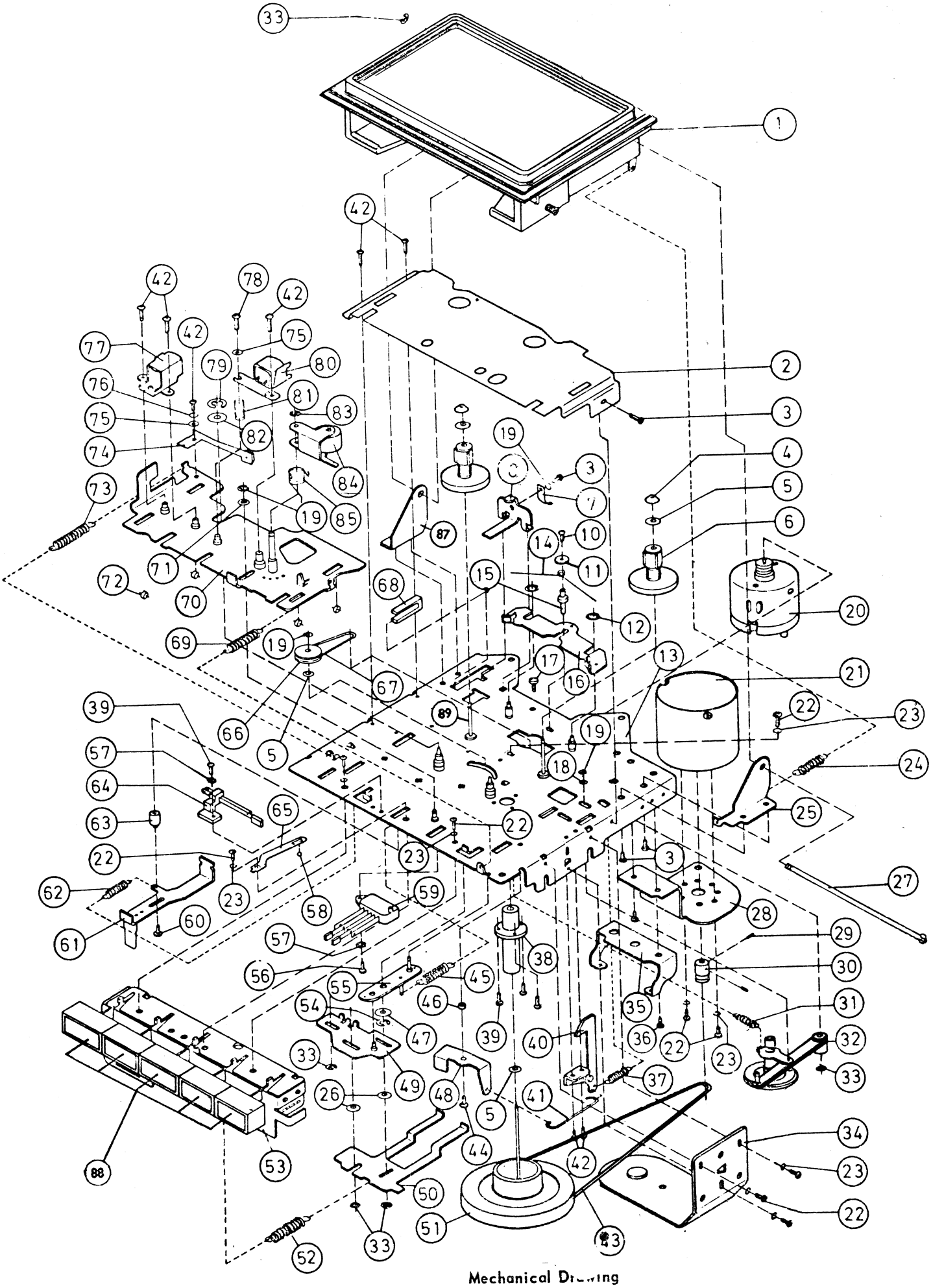

Mechanical Drawing

MECHANICAL PARTS LIST

Description	Code No.
1. Cassette Case Holder	4802 443 67001
2. Mechanical Chassis Cover	4822 459 80047
3. Screw 2.6 x 3	4822 502 11084
4. Turntable cap	4822 462 70822
5. Polyslider Washer (2.1x5x0.25)(quote size)	051 303 0151
6. Turntable Assembly	4822 528 10262
7. Record Lock Spring	226 318 0140
8. Record Safety Lever	4822 403 50653
10. Screw 2.6 x 10	4822 502 11062
11. Flat washer 2.0	4822 532 10331
12. E-ring 2.5	4822 530 70122
13. Mechanical Chassis Ass.	052 302 0151
14. Brake Arm Spring	4822 492 40479
15. Brake Arm Collar	4822 535 90882
16. Brake Arm Assembly	4822 403 50649
17. Screw 3 x 5	4822 502 10558
18. Polyslider Washer (2.1x6x0.5)(quote size)	051 303 0151
19. E-ring 1.5	4822 530 70121
20. Fast Fwd./Rewind Motor	4822 361 20094
21. Drive Motor Assembly	402 025 0160
22. Screw 2.6 x 4	4822 502 11084
23. Spring Washer 2.6	4822 530 80168
24. Cassette Case Spring (R)	4822 492 31008
25. Cassette Case Bracket (R)	216 307 0120
26. Stud (in Brake Lever Assy.)	235 313 0190
27. Cassette Case Shaft	4822 535 90883
28. Drive Motor Bracket	216 308 0192
Mounting Grommets (4x)	258 304 0170
29. Screw 2 x 3	205 021 2203
30. Motor Pulley	4822 528 80514
31. Take-up Mechanism Spring	4822 492 31009
32. Take-up Mechanism Assembly	4822 403 20094
33. E-ring 2.3	4822 530 70043
34. Flywheel Plate Assembly	4822 404 60071
35. Motor P.W.B. Mounting Bkt.	213 307 0131
36. Screw 3 x 6	4822 502 11064
37. Hook Spring	4822 492 31011
38. Flywheel Bushing	4822 520 10327
39. Screw 2 x 4	4822 502 11059
40. Record Safety Hook Assembly	4822 403 50647
41. Coupling Bar	4822 492 61783
42. Screw 2 x 3	205 021 2203
43. Drive Belt	4822 358 30175
44. Screw 2 x 3	205 021 2203

Description	Code No.
45. Fast Rewind Plate Spring	4822 492 31012
46. Kick Plate Collar	235 312 0130
47. Polyslider Washer (4.6 x 10 x 0.25)(quote size)	051 303 0151
48. Hook Kick Plate	225 301 0110
49. Fast Rewind Plate Assembly	4822 403 50651
50. Brake Lever	221 307 0132
51. Flywheel	4822 528 60074
52. Brake Lever Spring	271 302 0150
53. Push-button Switch Ass. (with knobs)	054 303 0131
54. E-ring 4.0	4822 530 70124
55. Fast Rewind Pulley Plate Ass.	4822 403 20092
56. Screw 2 x 5	4822 502 10679
57. Lock washer 2.0	4822 530 80079
58. Steel Ball, 2 mm.Dia.	4822 520 40037
59. Motor Switch (Leaf Sw.)	4822 278 90289
60. Screw 2 x 6	4822 502 10745
61. Record Lever Assembly	054 308 0152
62. Record Spring	4822 492 31007
63. Record Lever Boss	4822 532 20611
64. Leaf Switch (Sw5)	4822 278 90288
65. Holder, Sliding Sub-chassis Ass.	4822 403 50654
66. Fast Rewind Pulley	4822 528 80513
67. Fast Rewind Belt	4822 358 30176
68. Rubber Cushion	4822 466 60593
69. Slide Plate Spring (R)	4822 492 31006
Sleeve for Item 69	277 301 0170
70. Sliding Sub-chassis Ass.	4822 464 50027
71. Polyslider Washer (2.5 x 5 x 0.25)(quote size)	051 303 0151
72. Roller, Sliding Sub-chassis	4822 528 90221
73. Slide Plate Spring (L)	4822 492 31013
Sleeve for Item 73	277 301 0170
74. Back Tension Lever Ass.	4822 403 50648
75. Flat Washer 2.0	4822 532 10331
76. Spring Washer	4822 530 80162
77. Erase Head	403 019 0150
78. Screw 2 x 7	-
79. E-ring 5.0	4822 530 70125
80. Record/Playback Head	403 006 0130
81. Azimuth Adjustment Spring	4822 492 50974
82. Polyslider Washer (6.2x11x0.25)(quote size)	051 303 0151
83. E-ring 2.0	4822 530 70122
84. Pressure Roller Assembly	4822 403 20093
85. Pressure Roller Spring	4822 492 40481
86. Leaf Switch	440 027 0170
87. Cassette Case Bracket (L)	216 306 0160
88. Insert (Top face of P/B)	134 304 0151
89. Reel Shaft	244 301 0100

CABINET PARTS

Description	Code No.
Accessory Pouch	616 302 0140
Battery Cover assembly	4802 423 47003
Battery Terminal-pos.	023 302 0130
Battery Terminal-neg.	023 300 0130
Cabinet back assembly	4802 422 37003
Cabinet back metcal	135 303 0281
Cabinet back mtg. bracket	141 310 0170
Cabinet back mtg. stud	241 310 0170
Cabinet front assembly	4802 423 57003
Connection panel assembly:-	
- connection panel moulding	115 308 0111
- Jack socket (2.5mm)	450 041 0100
- Jack socket (3.5mm) (3x)	450 042 0100

Description	Code No.
- Mains socket (3 pin)	451 019 0160
- Slide Sw. (Spkr.on/off, Mains/Batt.)	4822 277 20125
Handle	148 302 0110
Handle bracket (R)	141 308 0140
Handle bracket (L)	141 309 0110
Handle collar (plastic bush)	253 305 0120
Knob, Tone and Volume (2x)	021 304 0130
Level Meter	401 004 0180
Mains cord	4802 321 17004
Microphone compartment cover assembly	4802 423 47006
Slide switch (Rec/Playback)	441 023 0180
Transformer mtg. bracket	141 307 0180

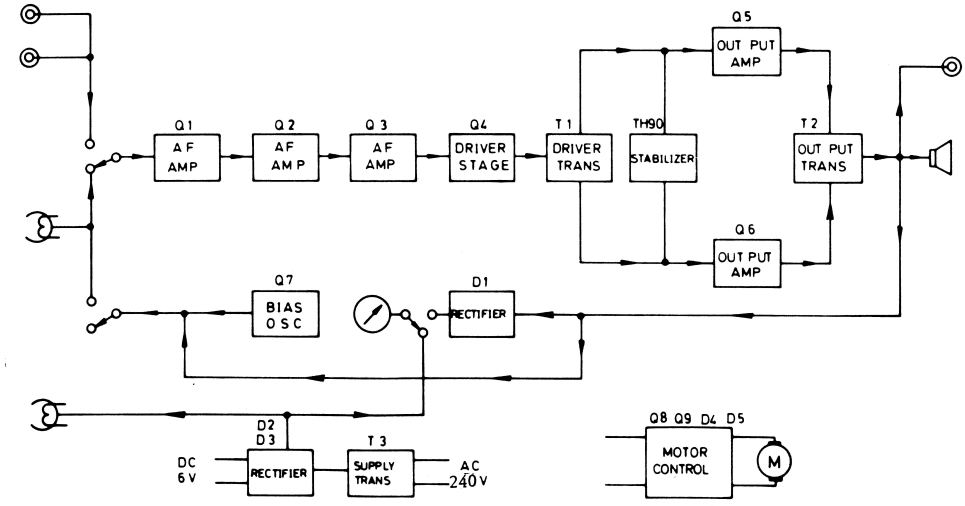

Block Diagram

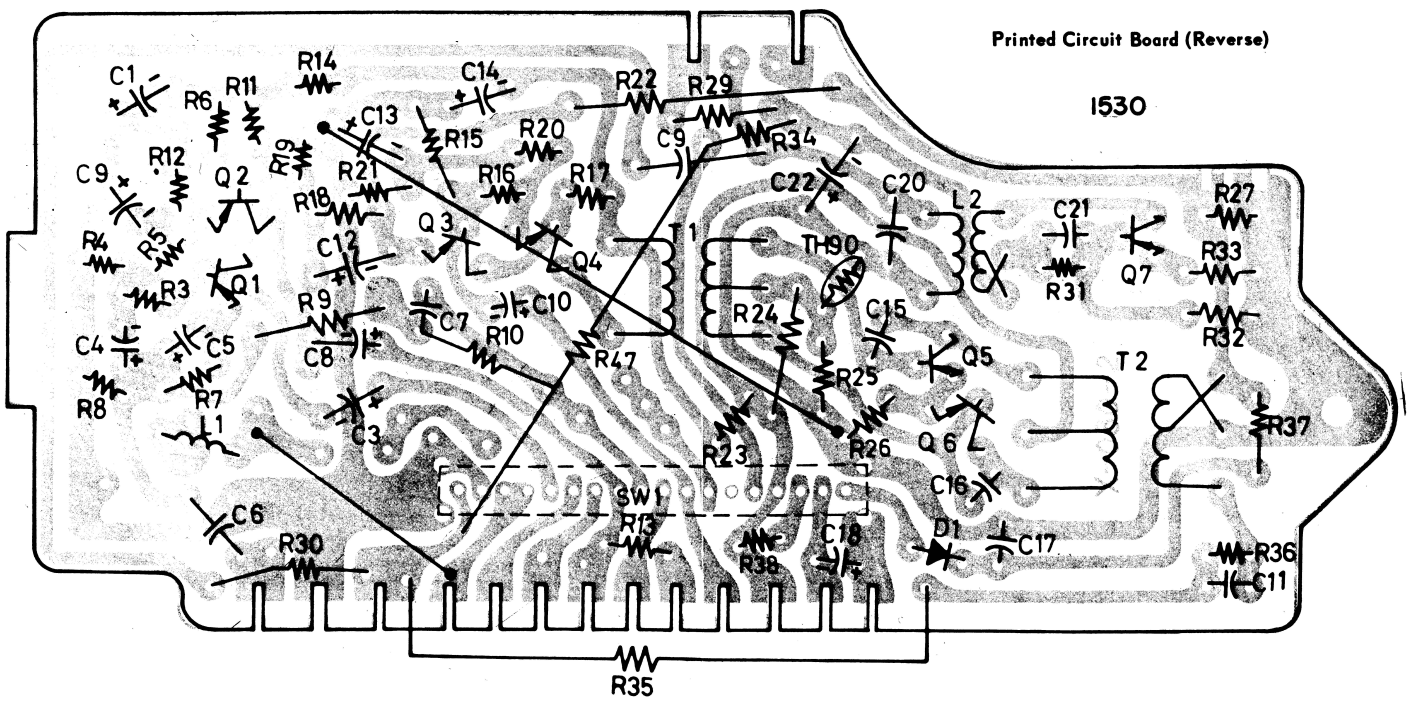

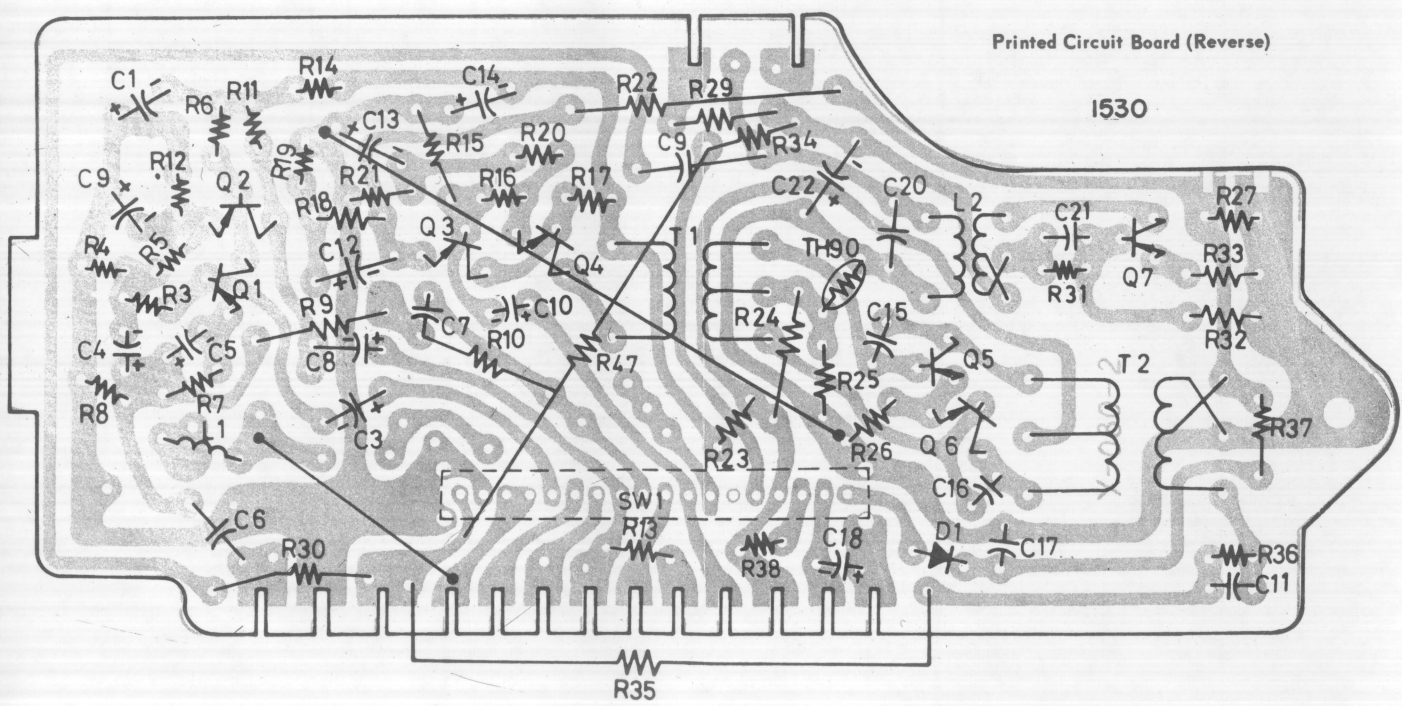
Printed Circuit Board (Reverse)
1530
C1
R6
R11
R14
C14
R22
R29
C13
R15
R20
C9
R34
R12
R19
C9
Q2
R21
R16
R17
C22
C20
L2
C21
R27
R18
Q3
T1
TH90
R33
R4
R5
C12
Q4
Q7
R31
R3
Q1
R9
C7
C10
R24
C15
R32
C4
C5
C8
R10
R47
Q5
T2
R8
R7
R25
L1
C3
R23
R26
Q6
R37
C16
SW1
C6
R13
C18
D1
C17
R30
R38
R36
C11
R35

ELECTRICAL PARTS LIST

CAPACITORS

C	Description	V.W.	Code No.
1	220mF electrolytic	6.3	520 322 0140
2	1nF polyester	50	541 310 6680
3	10mF electrolytic	6.3	520 210 0180
4	0.5mF "	6.3	520 047 0180
5	10mF "	6.3	520 210 0180
6	15nF polyester	50	541 315 6610
7	100nF ceramic	50	531 410 6660
8	10mF electrolytic	6.3	520 210 0180
9	33mF "	6.3	520 233 0120
10	10mF "	6.3	520 210 0180
11	300pF ceramic	50	532 130 6660
12	100mF electrolytic	6.3	520 310 0180
13	100mF "	6.3	520 310 0180
14	220mF "	6.3	520 322 0140
15	10nF polyester	50	541 310 6690
16	10nF "	50	541 310 6690
17	4.7nF "	50	541 247 6600
18	33mF electrolytic	6.3	520 233 0120
19	300pF ceramic	50	532 130 6660
20	4.7nF polyester	50	541 247 6600
21	4.7nF "	50	541 247 6600
22	220mF electrolytic	6.3	520 322 0140
23	2200mF "	10	521 422 0240
24	1nF polyester		Part of motor control assy
25	1nF "		" " " "
26	3.3mF electrolytic		" " " "

RESISTORS

R	Description	W	Tol. ±%	Type or Code No.
All resistors are carbon film, except as shown below.		0.25 watt	±10%	Philips style CR25,
28	8R2 carbon	1	10	CR 52
49	51 "	0.5	10	CR 37
VR1	10K potentiometer	(Volume)		502 008 0110
VR2	10K "	(Tone)		502 036 0160
VR3	500R "	(Motor speed control)		On Motor P.W.B.
TH	Thermistor 19D46			414 001 0150

INDUCTORS

L.	Description	Code Number
1	Choke	432 007 0120
2	Bias Osc. Coil	423 016 0120
T.		
1	Input Transformer	421 012 0140
2	Output "	421 037 0110
3	Power "	420 032 0130

MODIFICATIONS

Values of the following components may vary with production. Replacements for these items should always be of the same value as that which was originally fitted.

Circuit Ident.	Range.
R9	5.6 - 8.2 Kohm.
R36	180 - 220 Kohm.
R47	220 Kohm.
C2	1 - 2nF polyester
C11	200 - 500pF ceramic

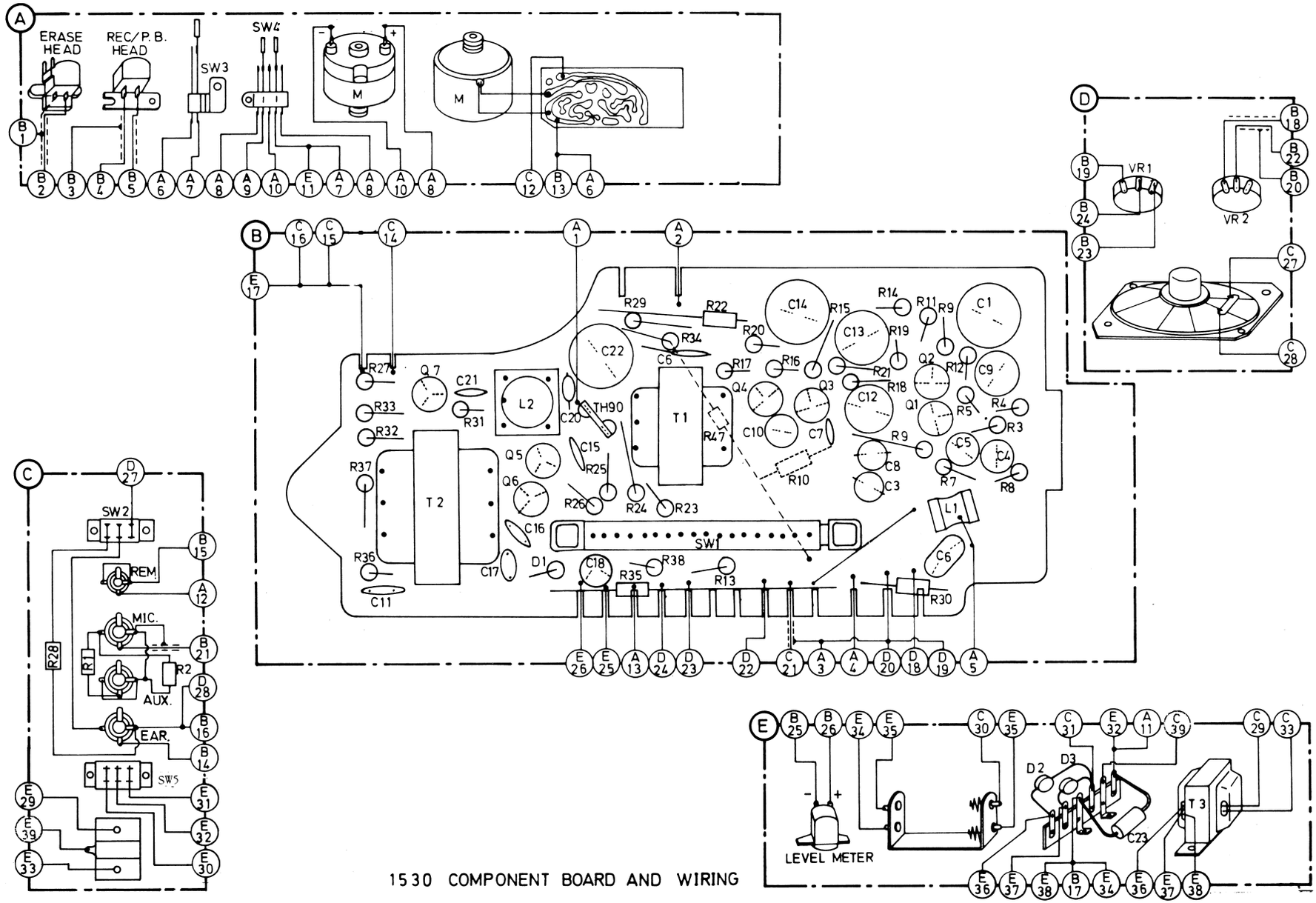

1530 COMPONENT BOARD AND WIRING

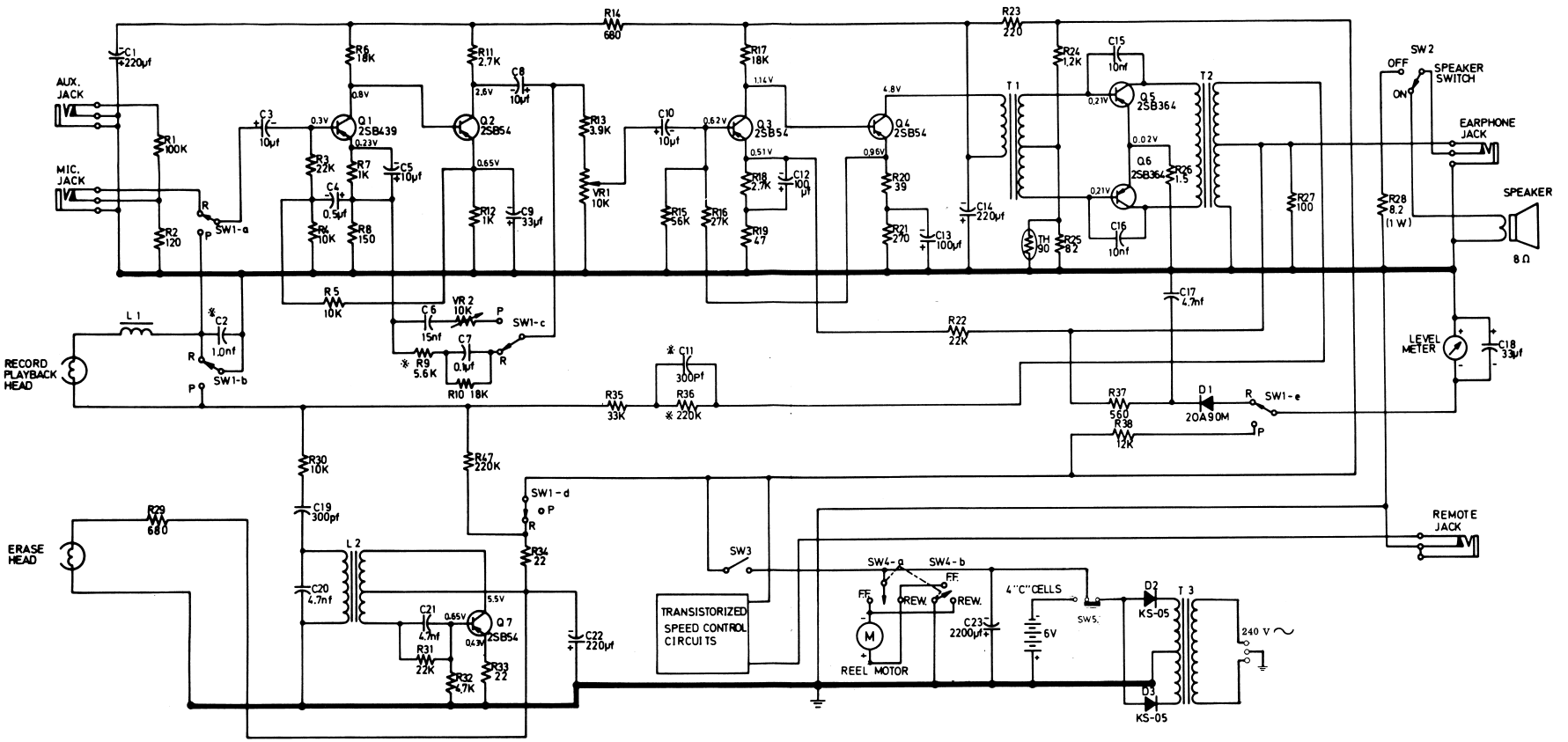

TRANSISTORIZED SPEED CONTROL CIRCUITS

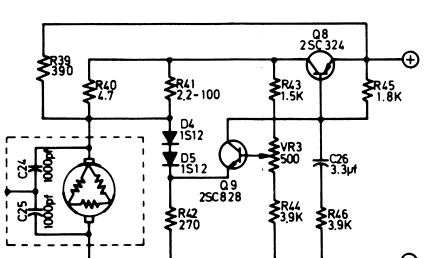

Schematic

ALL RESISTORS ARE 1/4W - 10% UNLESS OTHERWISE NOTED.

SW1-(a,b,c,d,e) IS GANGED.
P = PLAY
R = RECORD

※ R9, R36 C2, C11, Valyes of these components may vary according to production. Always replace with same value.