SERVICE MANUAL-
THORN 1416/1417/1424/1425

MODEL 1424

MODEL 1417

Models 1416, 1417, 1424 and 1425 are mains operated modular ambiophonic four channel audio units. Models 1416/1417 use the RM-1* series chassis, while Models 1424/1425 use the RN-1 series chassis. All models are fitted with a Garrard transcription turntable and magnetic cartridge.

* Later production units use RM-3 series chassis. The main differences are balance control wiring and some components around the tone control stage. (The RM-1 differences are shown in fig. 1).

Models 1416, 1424 are floor standing units.
Models 1417, 1425 are shelf mounting units.

Speaker enclosures are optional with Models 1417, 1425.

Model 1416 is supplied with 513SL speaker enclosure.
Model 1424 is supplied with 515SL speaker enclosure.

MODEL 1416

SPEAKER ENCLOSURES

Model No.	Features
514SS	– Sealed, padded, shelf mounting enclosure. – One 8" loudspeaker. – One dome tweeter.
513SL	– Vented, padded, floor standing enclosure. – Two 8" loudspeakers. – One dome tweeter.
515SL	– Sealed, padded, floor standing enclosure. – Four 8" Goodmans woofers. – One 3.3/8" Goodmans mid range. – One Goodmans dome tweeter. – Crossover network.

SPECIFICATIONS

Power Output:	1416,1417	25w R.M.S. music power per channel.
	1424, 1425	50w R.M.S. music power per channel.
Power Supply:	240V A.C. 50Hz.	
Load Impedance:	1416, 1417	8 ohms.
	1424, 1425	4 ohms.
P.U. Cartridge:	Pickering V-15/AT2.	
Replacement Stylus:	LP-D1507 AT2. 78-D1527.	

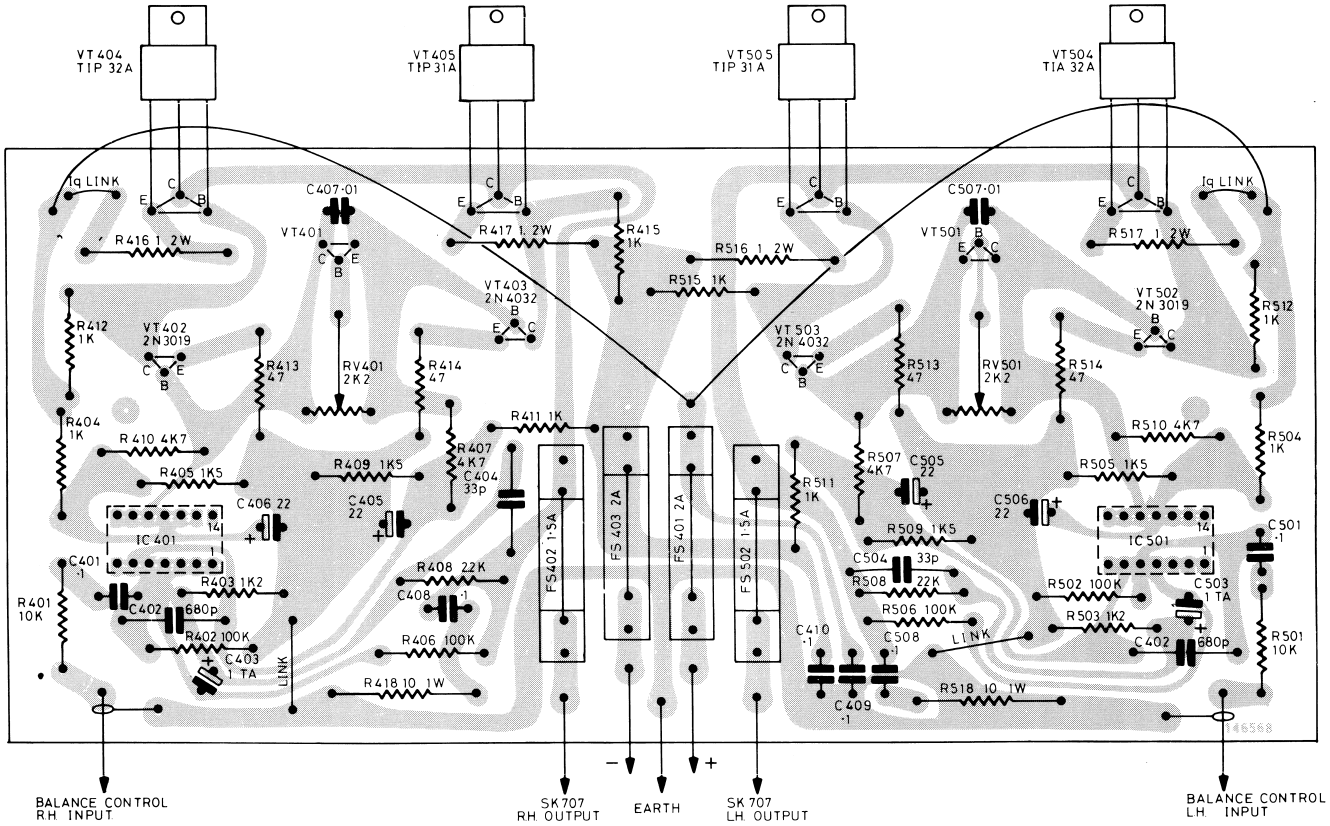

RM POWER AMPLIFIER

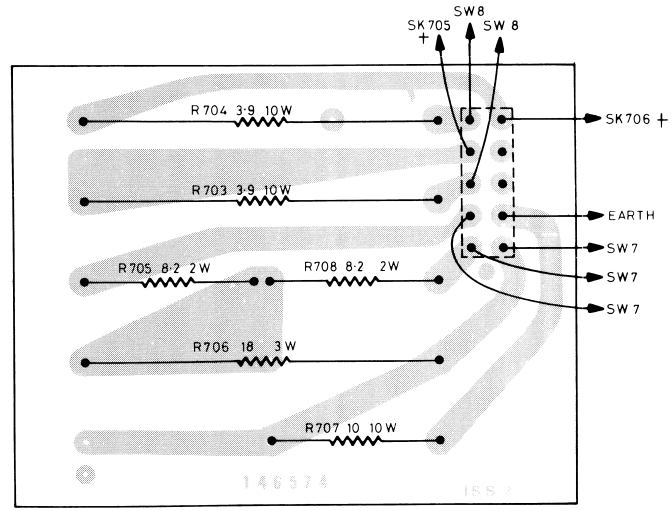

RN OUTPUT BOARD

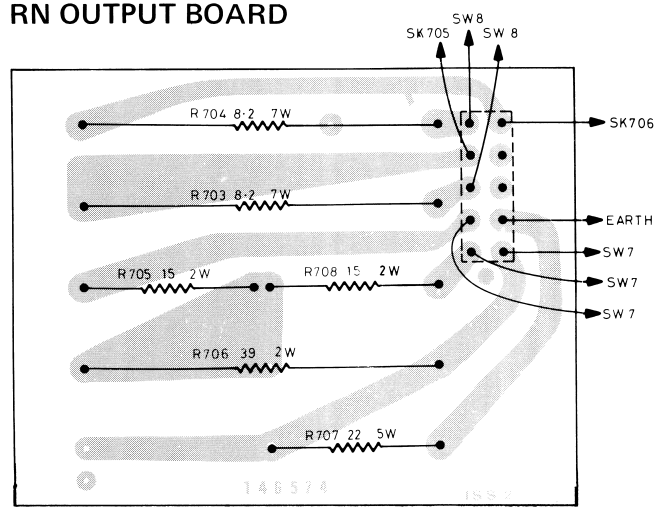

RM OUTPUT BOARD

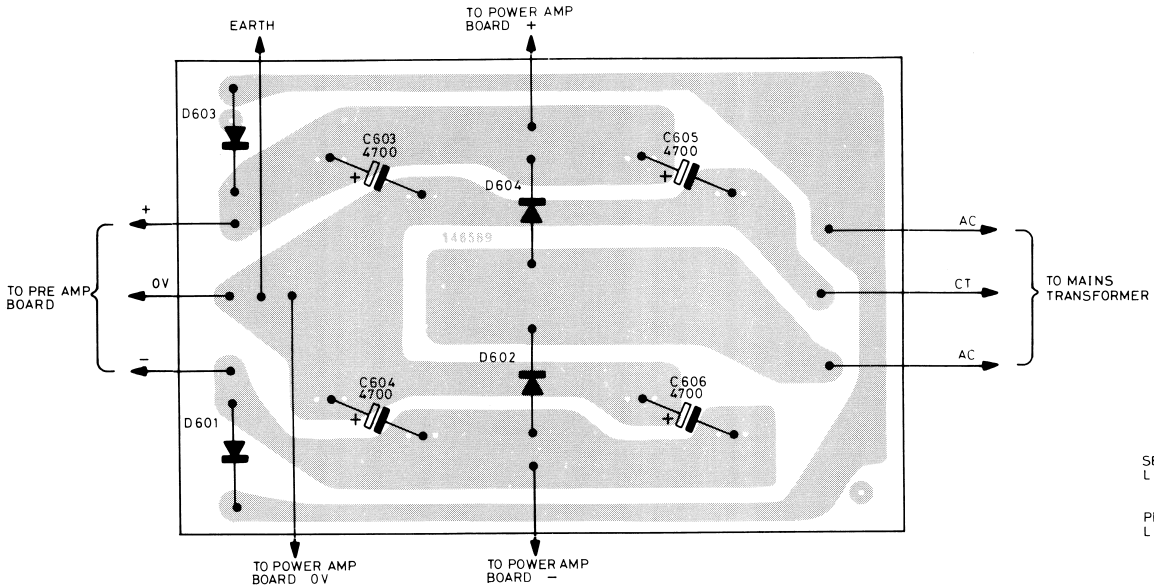

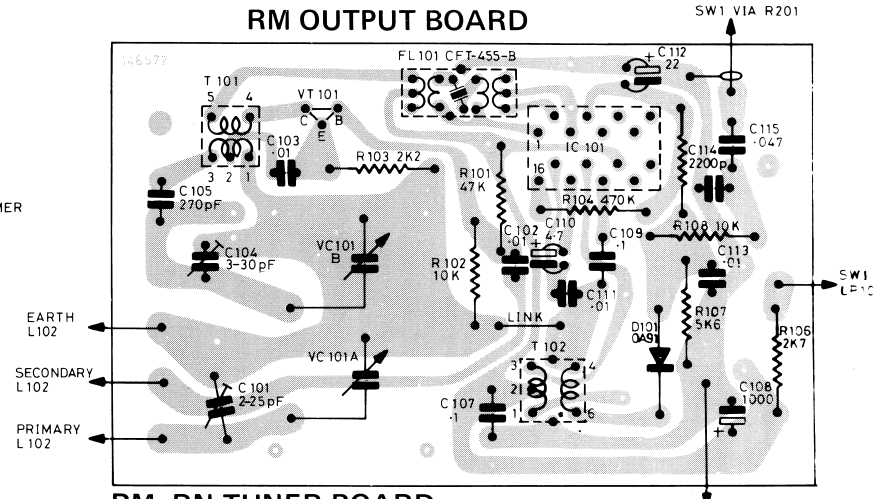

RM, RN TUNER BOARD

CHASSIS REMOVAL

1416,1424

Undo the two screws at the rear of the cabinet. Remove the two screws located inside the cabinet, at the top of door opening. The chassis can now be slid forward and out of the cabinet.

1417, 1425

Undo the screws securing the cabinet base. Remove the base.

TO REMOVE PRE-AMP CHASSIS

1424,1425

(1) Rear Panel Removal

Undo the six screws securing the rear panel to its supports. Remove the two screws, securing the tape socket bracket to the rear panel, and the three transformer securing screws. The rear panel and transformer can now be carefully lifted clear.

(2) Chassis Removal

Pull off the slide control knobs and the tuning knob. Undo the eight nuts securing the control bracket to the cabinet top. The chassis can now be lifted clear of the cabinet top.

1416,1417

(1) Rear Panel Removal

Removal procedure is the same as for 1424/1425, with the exception that there is no transformer mounting bracket.

TO REMOVE AMP BOARD

Remove the four screws securing the power transisters to the heatsink. Slide the board out of the supports. When replacing the amp. board, ensure that there is adequate heatsink compound on the transistors, and that the screws are fully tightened.

TO REMOVE TURNTABLE

Turn the transit screws fully in and hinge the retaining clips parallel to the screws. Disconnect leads to the turntable. Lift the turntable clear.

TO SERVICE POWER SUPPLY BOARD

With the rear panel removed, loosen the clamps on the large electrolytic capacitors. The P.S. board can then be lifted clear.

TO SERVICE TUNER AND 4 CHANNEL BOARD

All components are accessible with the boards in place.

RADIO ALIGNMENT

I.F. Connect a signal generator to a coupling loop placed in line with and about 2 feet from the ferrite rod antenna. With tuning gang fully closed and volume at maximum set the generator to 455KHz and adjust the I.F. transformer core for maximum output. The ceramic filter, FL101, is pre-set and should not be adjusted. Reduce generator output as receiver output increases, use a signal level as low as practical.

R.F. Set the tuning gang fully closed and align pointer to calibration mark on dial. With gang fully closed adjust oscillator coil at 520KHz, with gang fully open adjust oscillator trimmer at 1630KHz, repeat the above adjustment until tracking is correct. Adjust the aerial coil (by sliding along rod) for maximum output at 600KHz, and aerial trimmer for maximum output at 1470KHz. Repeat adjustments until no further improvement can be obtained.

QUIESCENT CURRENT ADJUSTMENT

1416,1417

With no signal input (volume control in minimum position) adjust RV401 and RV501 for 20mA.

1424, 1425

Adjust RV401 and RV501 for 45mA.

SENSITIVITY

Main Amplifier.

1416, 1417

Input signal 1 volt R.M.S. @ 1KHz fed to the input of main amplifier via R401, R501. A power meter connected to the amplifier output should register 18w R.M.S. ±1.5db.

1424, 1425

Input signal 1 volt R.M.S. @ 1KHz fed to the input via C401,C501. A power meter connected to the amplifier output should register 40w R.M.S. ±1.5db.

PRE-AMPLIFIER

1416, 1417, 1424, 1425

With a generator output of 100mv R.M.S. at 1KHz fed to the tape input socket. A power meter connected to the main amplifier output should register:

18w R.M.S. ± 1.5db	(1416, 1417)
40w R.M.S. ± 1.5db	(1424, 1425)

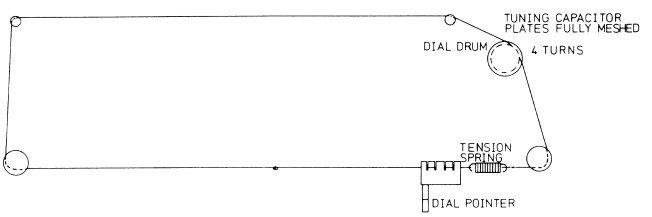

RM, RN DIAL CORD ARRANGEMENT

GENERAL MECHANICAL

Description	Part No.
Cabinet base, 1417, 1425	125105
Cabinet top moulded	160269
Escutcheon, 1416, 1417	420111
Escutcheon, 1424, 1425	420114
Front trim, 1416, 1417	920145
Front trim, 1424, 1425	920171
Rubber foot, 1417	440020
Rubber foot, 1425	440018
Handle, 1417, 1425	468022
Hinge lid, 1417, 1425	469030
Stay, lid, 1416, 1424	862003
Perspex lid, 1417, 1425	557006
Rear Panel, 1416, 1417	658165
Rear Panel, 1424, 1425	658163
Heatsink – power transistors, 1424, 1425	838023
Tuning Knob	510200
Tuning Knob insert	477043
Tuning Knob clip	245042
Knob, slide controls	510198
Knob, push button	510214
Dial pointer	683007
Pulley, dial cord	686401
Pulley, dial cord clip	245160
Spindle, pulley	852037
Diffuser	376007
Corner dial pointer	195005
Gasket tweeter, 1416, 1417	453006
Gasket tweeter, mid range, 1424, 1425	453004
Gasket, 8" speaker	453008
Lampholder	535024
Shield transformer, 1424, 1425	835043
Connector, 10-way	300034
Cover, capacitors	330095

GENERAL ELECTRICAL

Description	Part No.
Aerial Coil	10605
Coupling Coil	10606
Record Changer	720066
Cartridge	202004
Lamp 28V	535034
Ferrite Rod	770012
Neon lamp	535029
Rocker switch DPDT	880816
7 push button switch	880820
3 push button switch	880821
Loudspeaker, tweeter 1424, 1425	560095
Loudspeaker, mid range 1424, 1425	560134
Loudspeaker, 8" 1424, 1425	560304
Mains transformer 1424, 1425	917555
Loudspeaker, tweeter 1416, 1417	560100
Loudspeaker, 8" 1416, 1417	560303
Mains transformer 1416, 1417	917557

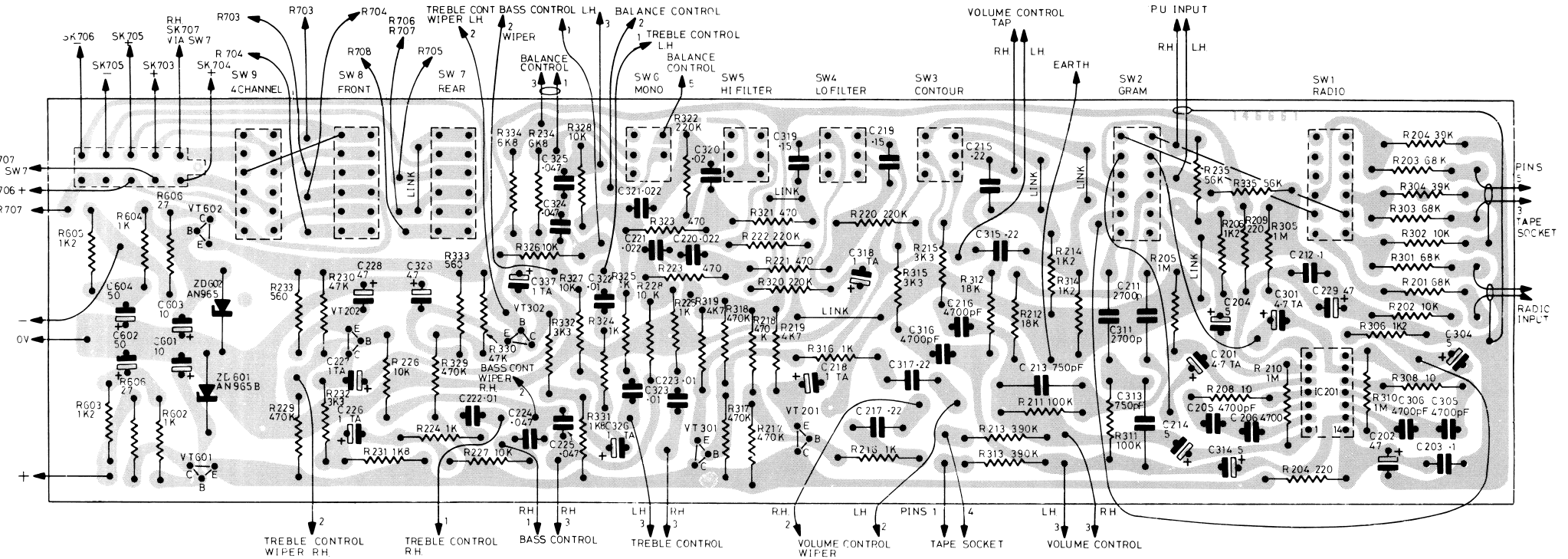

RM. RN PRE-AMPLIFIER

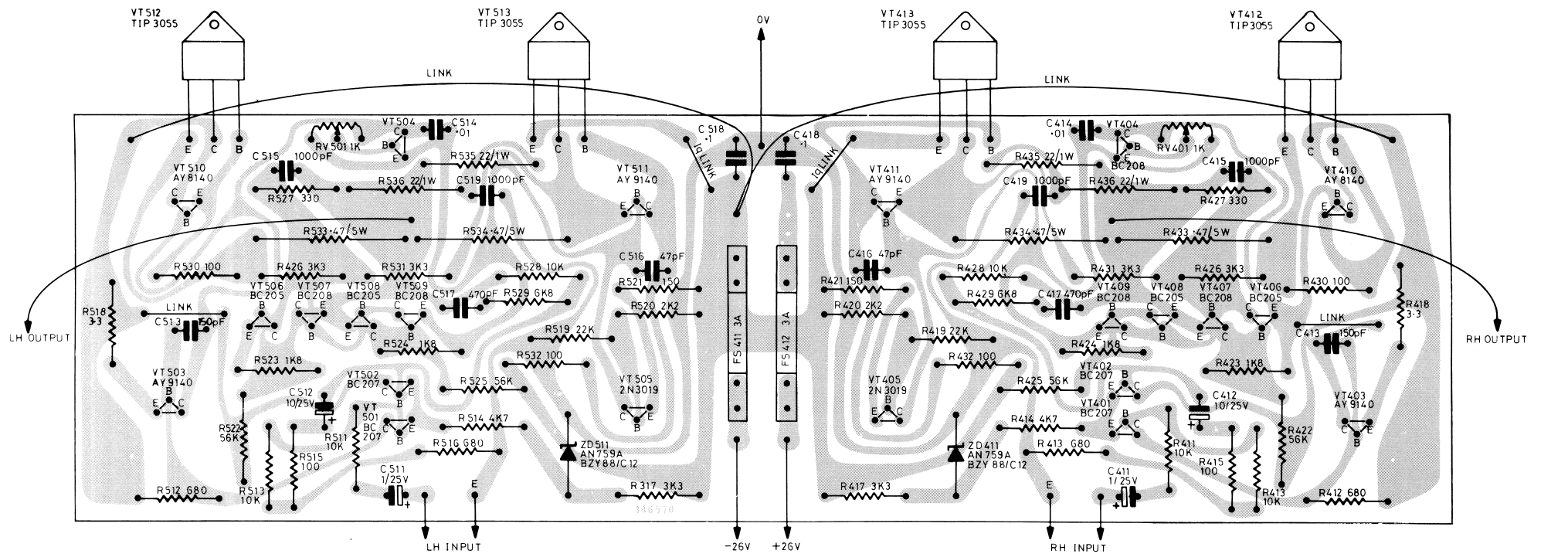

RN POWER AMPLIFIER

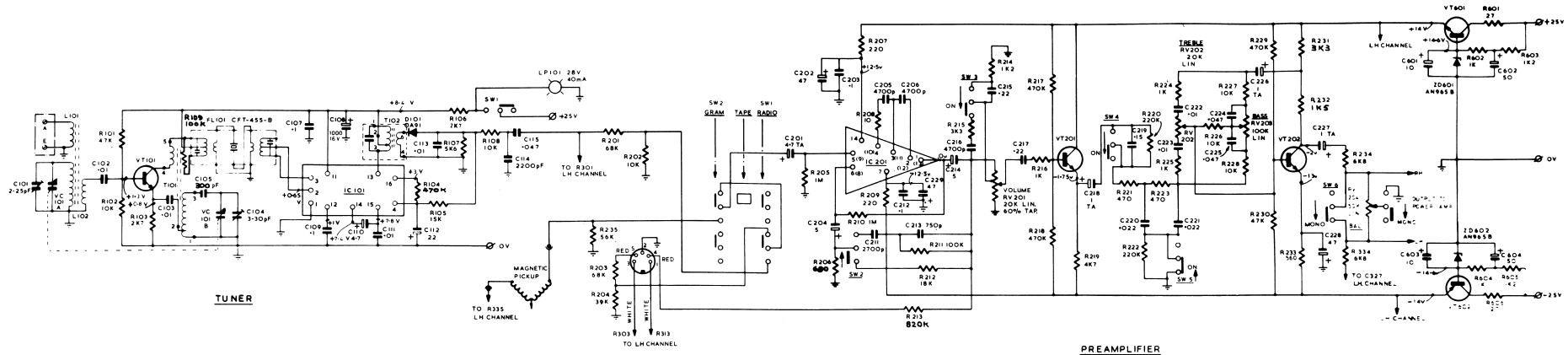

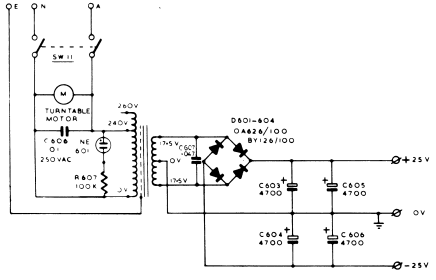

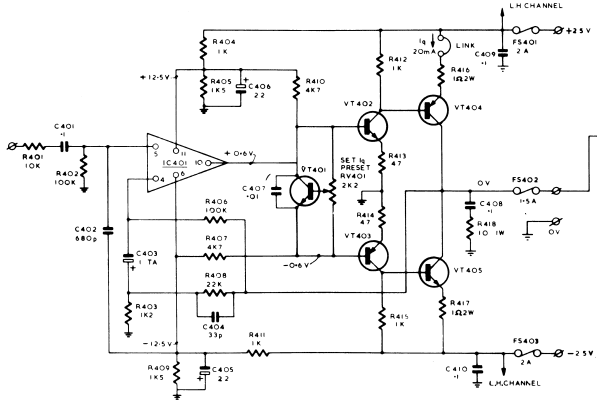

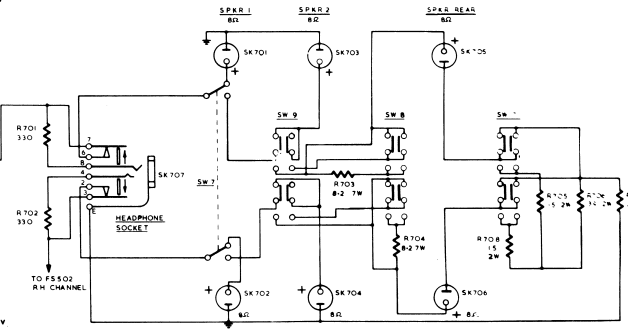

COMPONENT NUMBERING	
100	TUNER
200	RH PREAMP
300	LH PREAMP
400	RH POWER AMP
500	LH POWER AMP
600	POWER SUPPLY
700	SPEAKER SWITCHING

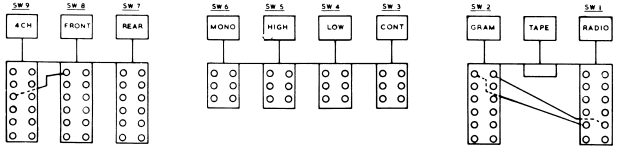

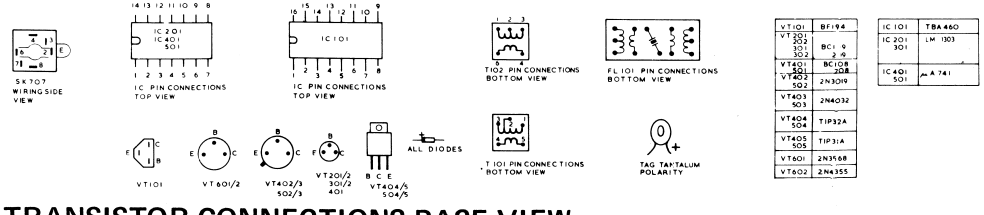

VT101	BF194
VT201 301 302	BC109 2 6
VT401 501	BC108 208
VT402 502	2N3019
VT403 503	2N4032
VT404 504	TIP32A
VT405 505	TIP31A
VT601	2N3568
VT602	2N4355

IC101	TBA460
IC201 301	LM 1303
IC401 501	μA 741

(+12V) VOLTAGES SHOWN THUS ARE MEASURED WITH RESPECT TO THE ZERO VOLT EARTH RAIL USING A 20,000Ω/V METER WITH NO SIGNAL INPUT.

ALL RESISTORS 1/2 OR 1/4 W 5% UNLESS SHOWN OTHERWISE

RM 3 SERIES

PT. NO. 365009

TRANSISTOR CONNECTIONS BASE VIEW

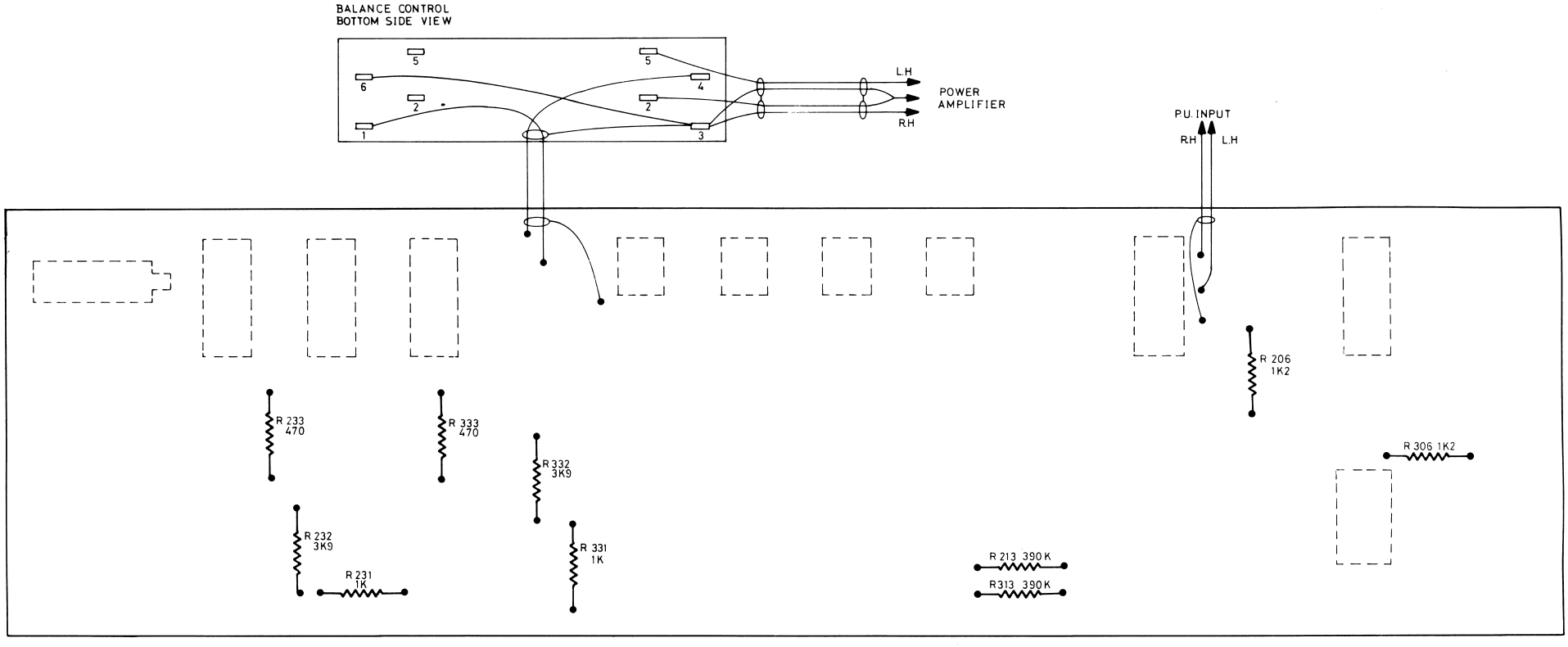

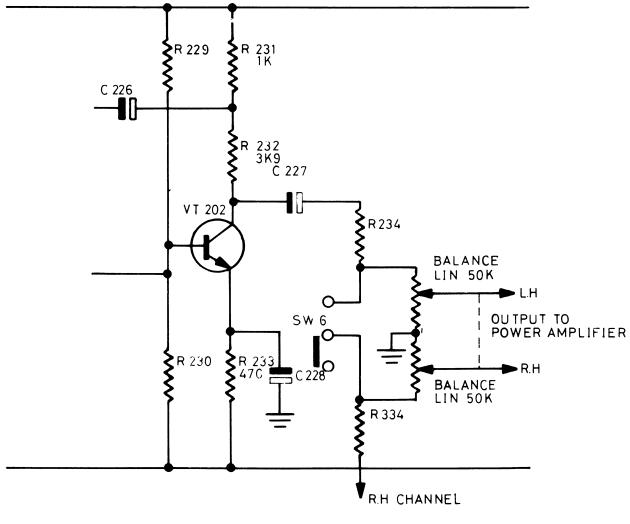

NOTE: R 206, R 306, 390 K.
R 213, R 313, 1K2.

RM-1 BALANCE CONTROL WIRING
Fig 1.

PRE-AMP (COMMON)

Description		Part No.
Printed Circuit Board		146661
Semiconductors:—		
Zener diode	BZY88/C15	378018
Integrated Circuit	LM1303N	471015
Transistor VT602	2N4355	928090
or PN4355		918193
or MPS4355		918169
VT201/301 202/302 BC209		918114
or 2N5088		918224
or SE4010		918088
VT601 2N3568		918139
Potentiometers:—		
Slide pot (volume) 20K + 20K lin tap 10K		686537
Slide pot (treble) 20K + 20K lin		686536
Slide pot (bass) 100K + 100K lin		686704
Slide pot (balance) 50K + 50K lin		686052

All resistors ¼w or ½w 5% hi stability carbon film.

Capacitors:—

C201/301	4.7uF 25v tantalum
C202	47uF 25v electro.
C203	.1uF 10% 50v poly.
C204/304	4.7uF 25v electro.
C205/305	4700pF 10% 50v poly.
C206/306	4700pF 10% 50v poly.
C211/311	2700pF 5% 50v styro.
C212	.1uF 10% 50v poly.
C213/313	750pF 5% 50v styro.
C214/314	4.7uF 25v electro.
C215/315	.22uF 10% 50v poly.
C216/316	4700pF 10% 50v poly.
C217/317	.22uF 10% 50v poly.
C218/318	1uF 35v tantalum
C219/319	.15uF 10% 50v poly.
C220/320	.022uF 10% 50v poly.
C221/321	.022uF 10% 50v poly.
C222/322	.01uF 10% 50v poly.
C223/323	.01uF 10% 50v poly.
C224/324	.047uF 10% 50v poly.
C225/325	.047uF 10% 50v poly.
C226/326	1uF 35v tantalum
C227/327	1uF 35v tantalum
C228/328	47uF 25v electro.
C601	10uF 25v electro.
C602	47uF 25v electro.
C603	10uF 25v electro.
C604	47uF 25v electro.

AMP BOARD — 1416 — 1417

Description		Part No.
Printed Circuit Board		146568
Fuse 2A		450004
Fuse 1.5A		450008
Integrated Circuit, uA741		471006
Preset Pot. 2K2		686538
Heatsink, 1" long		838028
Clip, fuseholder		245106
Transistors:—		
VT401/501	BC318	918305
	BC208	918150
	BC148	918048
VT402/502	2N3019	918160
	0C9536	918151
VT403/503	2N4032	918161
	OC9566	918152
VT404/504	TIP32A	918154
VT405/505	TIP31A	918153

All resistors ¼w or ½w 5% H.S. except:—

R416, 417, 516, 517	1 ohm 2w w.w
R418, 518	10 ohm 1w 5% H.S.

Capacitors:—

C401/501	.1uF 10% 50v poly.
C402/502	680pF 10% 50v styro.
C403/503	1uF 35v tantalum
C404/504	33pF 10% 125v styro.
C405/505	22uF 25v electro.
C406/506	22uF 25v electro.
C407/507	.01uF 10% 50v poly.
C408/508	.1uF 10% 50v poly.
C409/509	.1uF 10% 50v poly.
C410/510	.1uF 10% 50v poly.

AMP BOARD — 1424 — 1425

Description		Part No.
Printed Circuit Board		146570
ZD411, 511 zener diode	AN759A	378094
Fuse, 3A		450011
Preset pot. 1K		686539
Heatsink, 1" long		838028
Clip, Fuseholder		245106

AMP BOARD — 1424 — 1425

Transistors:—		Part No.
VT401/501	BC207B	918147
	BC317B	918134
VT402/502	BC207B	918147
	BC317B	918134
VT403/503	AY9140	918157
VT404/504	BC208	918150
	BC318	918305
VT405/505	2N3019	918160
VT406/506	BC205	918162
VT407/507	BC208	918150
	BC318	918305
VT408/508	BC205	918162
VT409/509	BC208	918150
	BC318	918305
VT410/510	AY8140	918156
VT411/511	AY9140	918157
VT412/512	TIP3055	918155
VT413/513	TIP3055	918155

Capacitors:—

C411/511	1uf 25v electro.
C412/512	10uF 25v electro.
C413/513	150pF 5% 50v NPO ceramic
C414/514	.01uF 10% 50v poly.
C415/515	1000pF 50v GMV ceramic
C416/516	47pF 10% 50v NPO ceramic
C417/517	470pF 10% 50v N750 ceramic
C418/518	.1uF 10% 50v poly.
C419/519	1000pF 50v GMV ceramic
C420/520	.1uF 10% 50v poly.

4 CHANNEL BOARD — 1416 — 1417

Description	Part No.
Printed Circuit Board	146574
Resistors:—	
R703, R704	8.1 ohm 10% 7w w/w
R705,R708	15 ohm 10% 2w w/w
R707	22 ohm 10% 5w w/w
R706	39 ohm 10% 2w w/w

4 CHANNEL BOARD — 1424 — 1425

Printed Circuit Board	146574
Resistors:—	
R703, R704	3.9 ohm 10% 10w w/w
R708, R705	8.2 ohm 10% 2w w/w
R707	10 ohm 10% 10w w/w
R706	18 ohm 10% 3w w/w

TUNER (COMMON)

Description	Part No.
Printed Circuit Board'	146572
Transistor BF194	918050
Diode OA91	378000
Tuning capacitor 2 gang	274021
Ceramic filter	436032
I.C. TBA460 — Q	471007
I.F. transformer	917609
B/C osc. transformer	917616
Screw, 2.6mm x 13mm	820031
Screw, 2.6mm x 6mm	820030

Capacitors:—

C101	2.25pF trimmer	274010
C102	.01uF 10% 50v poly.	
C103	.01uF 10% 50v poly.	
C104	3.30pF trimmer	274016
C105	300pF 5% 300v mica	
C107	.1uF GMV 25v ceramic	
C108	1000uF 16v electro	
C109	.1uF GMV 25v ceramic	
C110	4.7uF 25v electro.	
C111	.01uF 10% 50v poly.	
C112	22uF 25v electro.	
C113	.01uF 10% 50v poly.	
C114	2200pF 10% 50v poly.	
C115	.047uF 10% 50v poly.	

POWER SUPPLY (COMMON)

Description			Part No.
Printed Circuit Board			146569
Diodes:—			
D601 — 604	1416, 1417	OA626-100	378082
D601 — 604	1424, 1425	—	378066

Capacitors:—

C603 — C606	4700uF 35v electro.
C606	.01uF 250v A.C. ceramic
C607	.047uF 10% 100v poly.

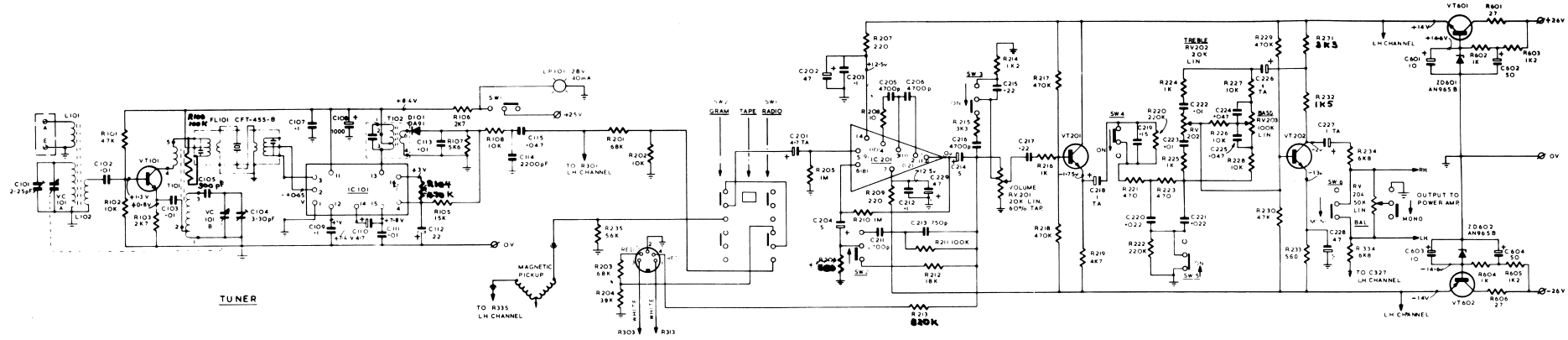

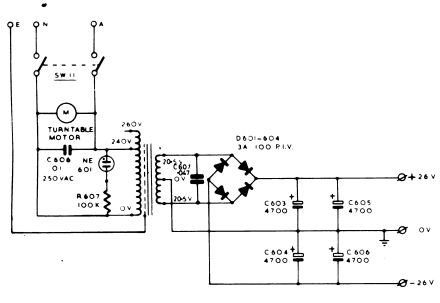

COMPONENT NUMBERING	
100	TUNER
200	RH PREAMP
300	LH PREAMP
400	RH POWER AMP
500	LH POWER AMP
600	POWER SUPPLY
700	SPEAKER SWITCHING

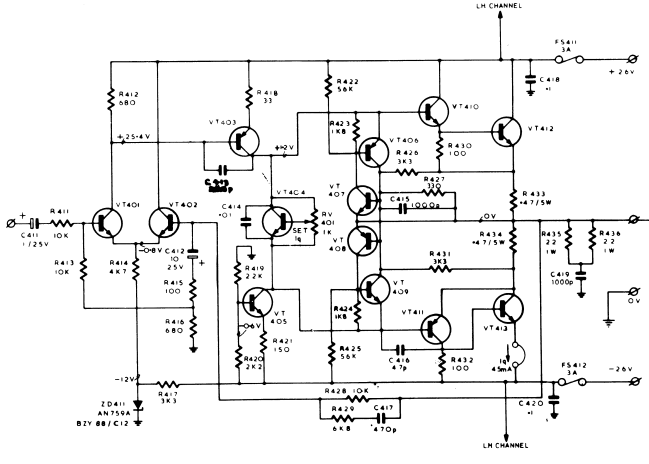

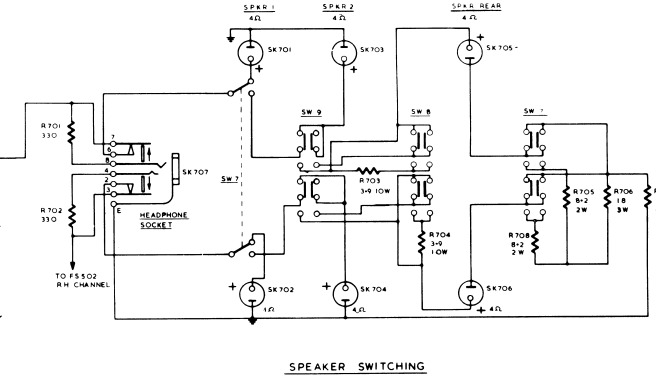

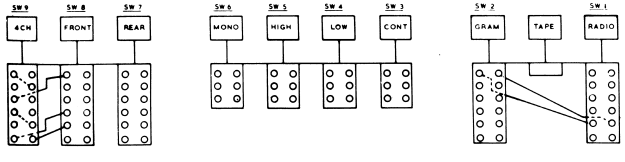

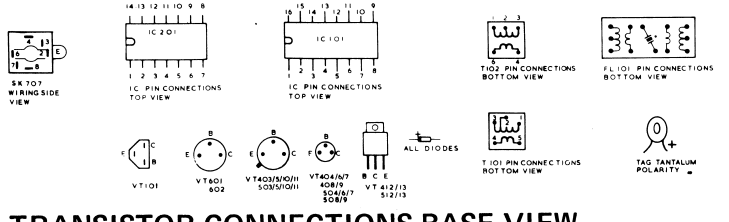

VT101	BF194
VT201 202 301 302	BC109 209
VT401 501 402 502	BC207B
VT403 503	AY9140
VT404 504 407 507 409 509	BC108 208
VT405 505	2N3019
VT406 506 408 508	BC205

IC 101	TBA460
IC 201 301	LM 1303

VT410 510	AY9140
VT411 511	AY9140
VT412 512 413 513	TIP3055
VT601	2N3568
VT602	2N4355

(+12v) VOLTAGES SHOWN THUS ARE MEASURED WITH RESPECT TO THE ZERO VOLT EARTH RAIL USING A 20000Ω/V METER WITH NO SIGNAL INPUT

ALL RESISTORS 1/20R 1/4W 5% UNLESS SHOWN OTHERWISE

RN SERIES

ISS. 3 PT No. 365099

TRANSISTOR CONNECTIONS BASE VIEW