13H-865L CIRCUIT DIAGRAM

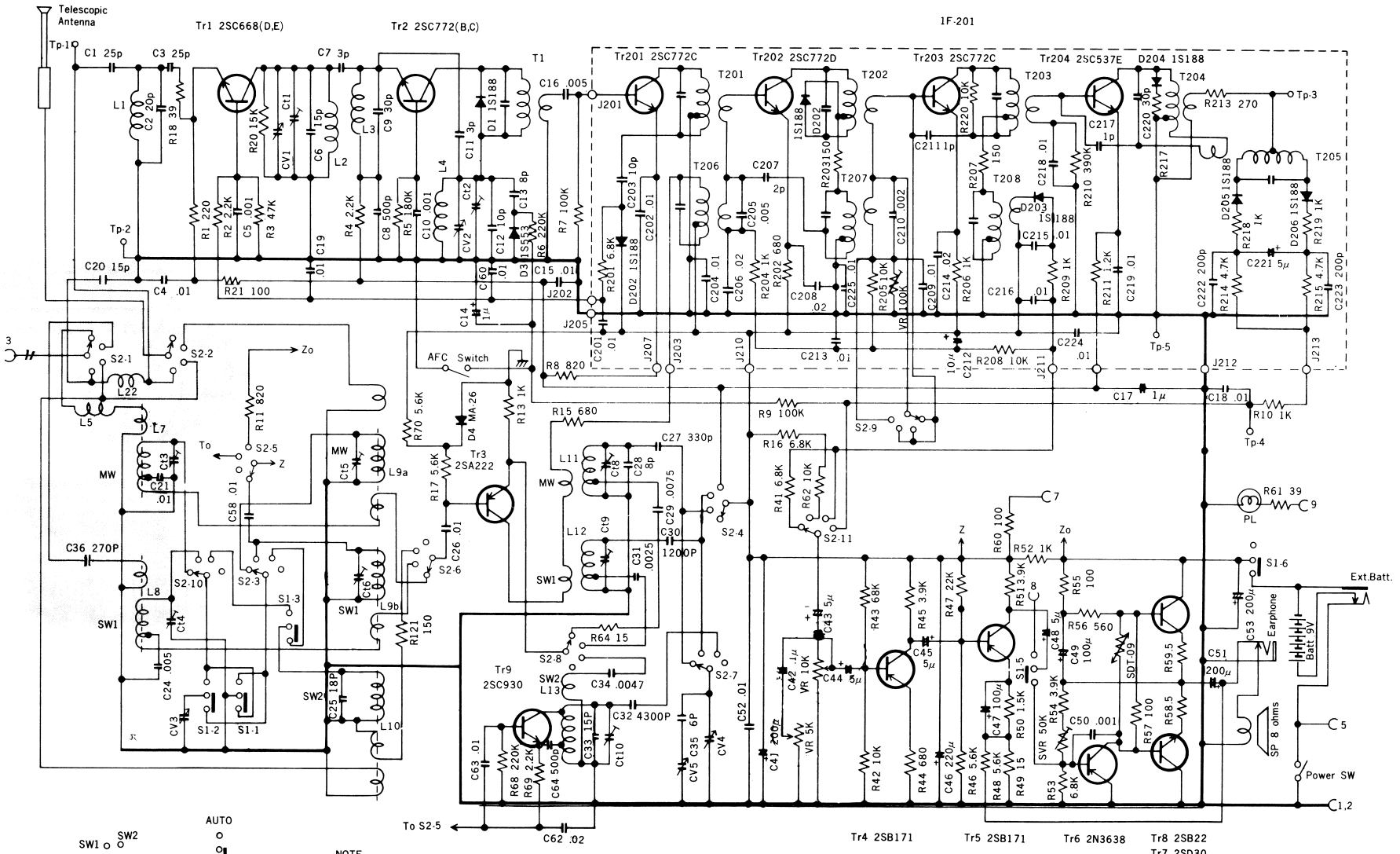

For. Align. see Model 12H-864

IF-201 ASSEMBLED IF BLOCK (Component of 13H-865)

SCHEMATIC DIAGRAM

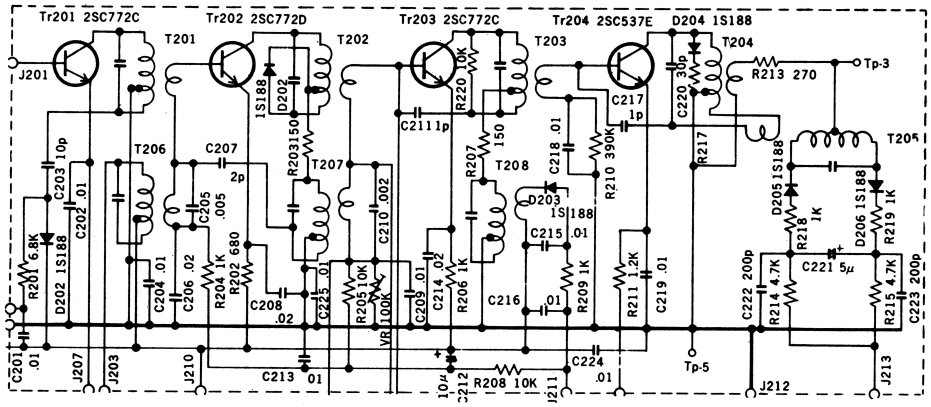

INTER-PARTS WIRING ILLUSTRATION

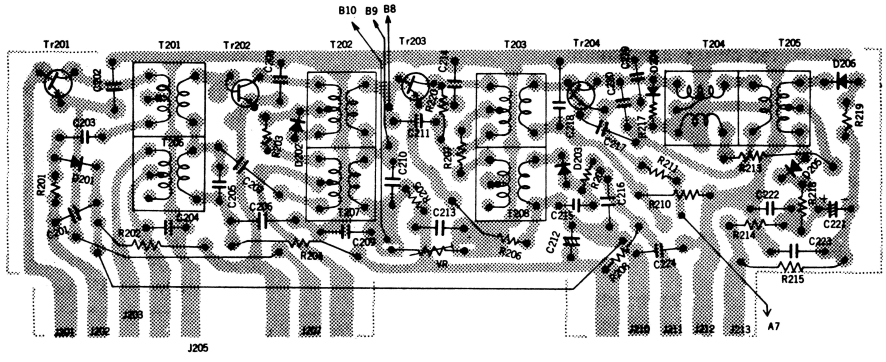

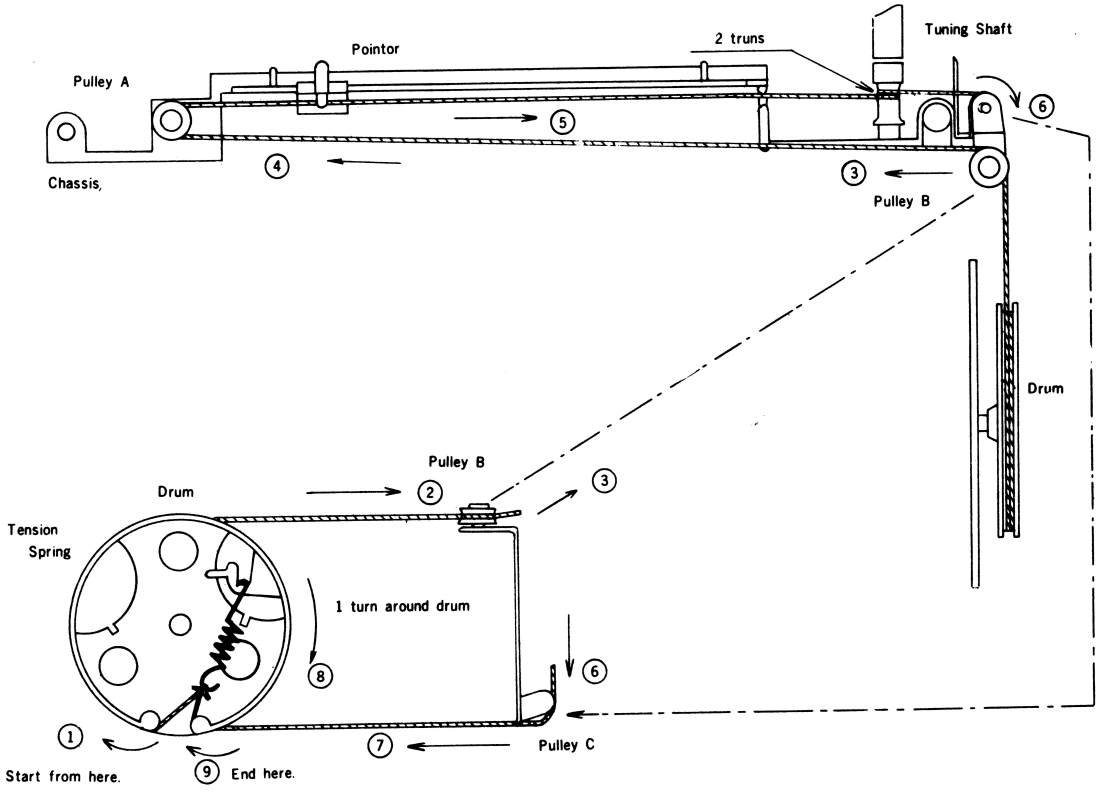

AUTO BRACKET

SPECIFICATIONS

POWER SUPPLY: DC 6 volts or 12 volts.
(Reversible grounding polarity)

AUDIO OUTPUT: Maximum 3,000mW (on 6 volts)
Undistorted 2,200mW (on 6 volts)
Maximum 6,000mW (on 12 volts)
Undistorted 4,000mW (on 12 volts)

SPEAKER: 6 inch permanent dynamic
4 ohm voice coil impedance

DIMENSIONS: 10-⅝″ wide×3″ high×7″ deep

WEIGHT: 3.3 lbs. (1.4 kg.)

SCHEMATIC DIAGRAM

TRANSISTORS VOLTAGE CHART

	COLLECTOR VOLTAGE		BASE VOLTAGE		EMITTER VOLTAGE		COLLECTOR CURRENT	
	on 6V	on 12V	on 6V	on 12V	on 6V	on 12V	on 6V	on 12V
2SB185	5.6V	5.6V	1.0V	1.0V	0.8V	0.8V	5.3mA	5.3mA
2SB474	6.6V	13.2V	0.1V	0.15V	0V	0V	12mA	14mA

NOTE: All voltages measured from common ground (positive line) to respective terminals of transistors.
Collector current of 2SB474 measured with meter applied between center tap on primary winding of output transformer and power supply line (−).

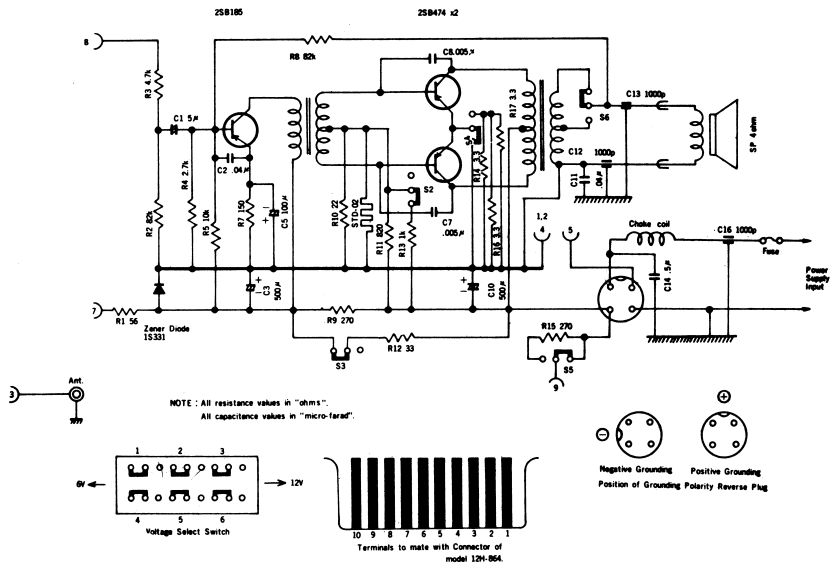

INTER-PARTS WIRING ILLUSTRATION

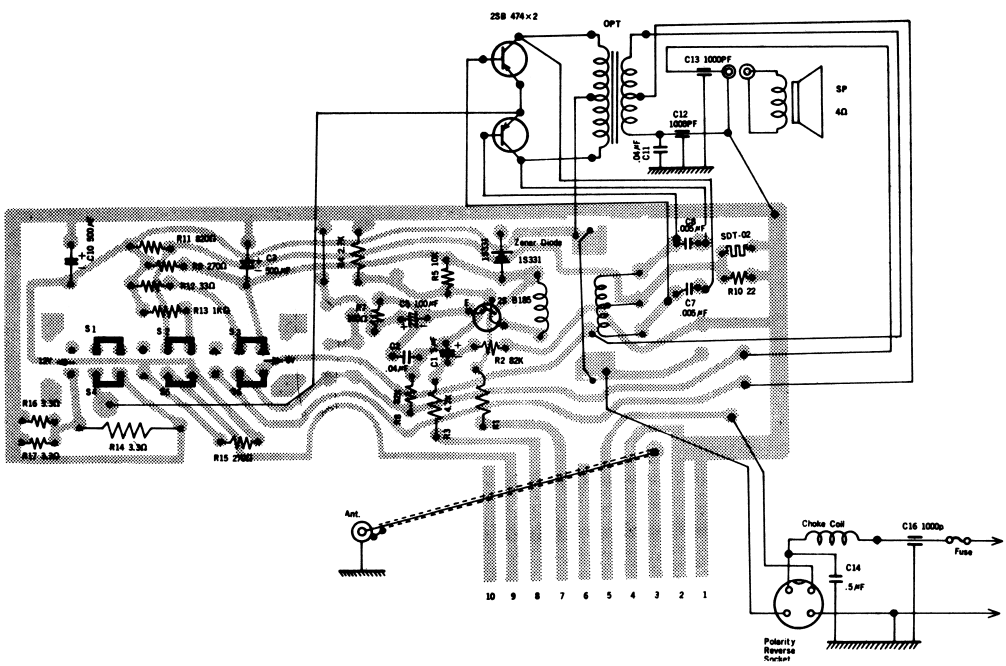

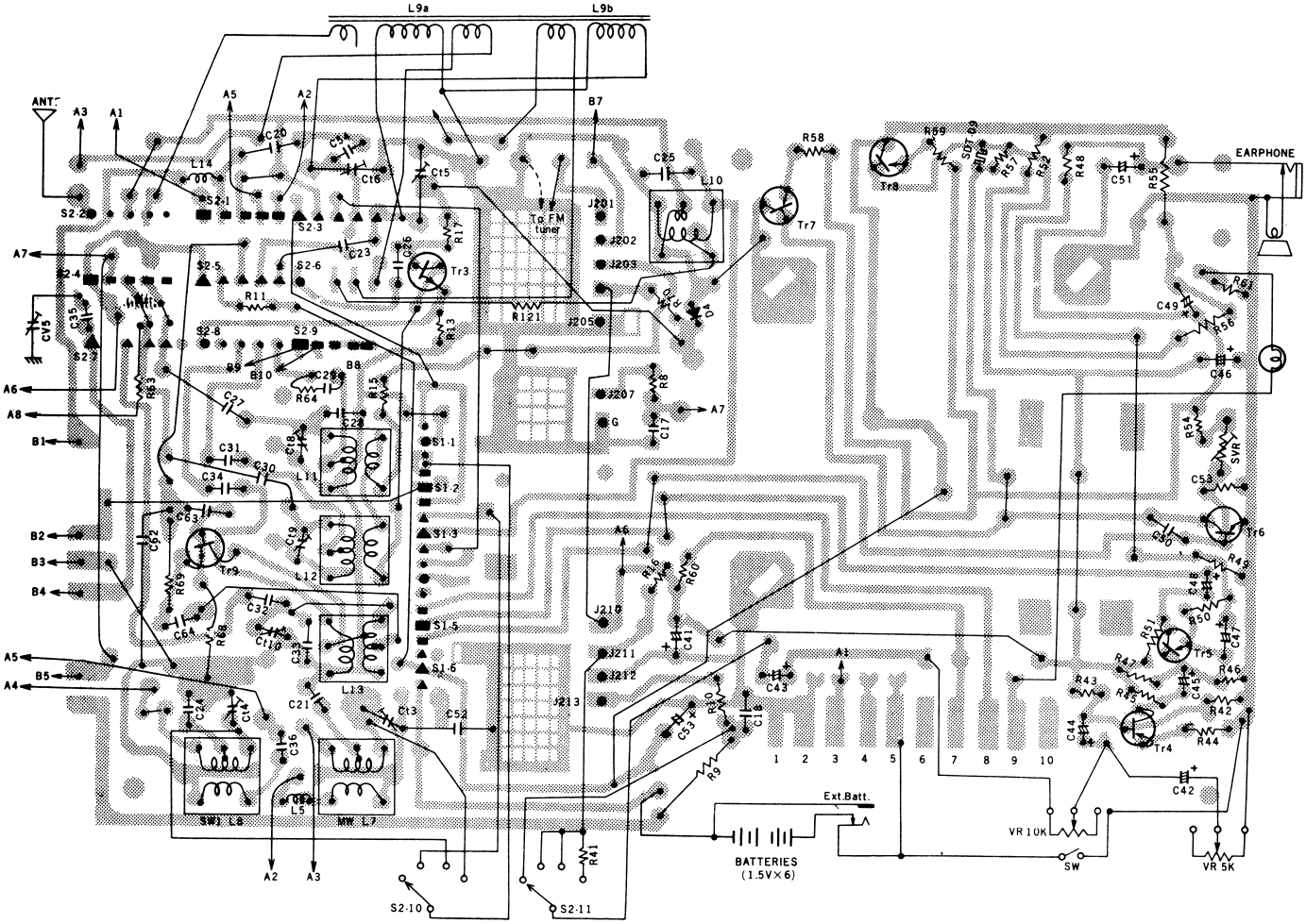

MEASURED VOLTAGES DEVELOPED ON RESPECTIVE TERMINALS OF TRANSISTORS AND COLLECTOR CURRENTS
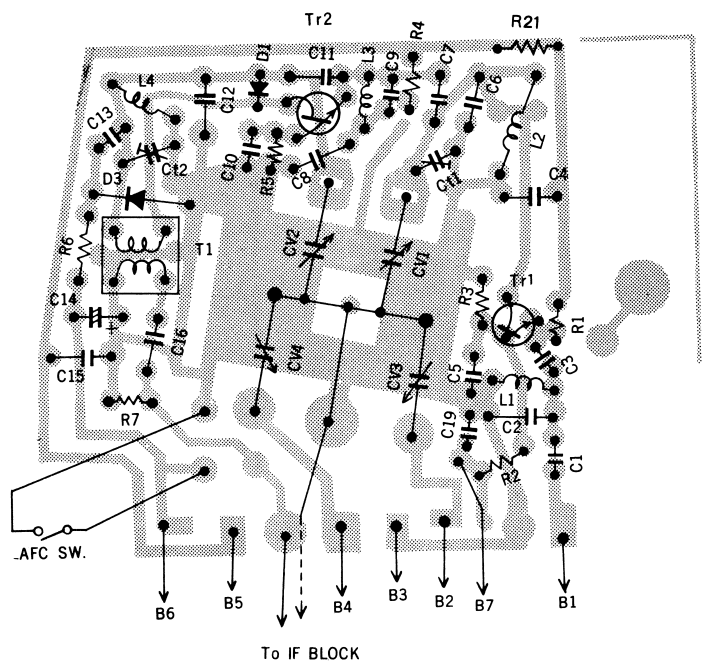
		Tr 1	Tr 2	Tr 3	Tr 4	Tr 5	Tr 6	Tr 7	Tr 8
VOLTAGE	Collector	-5.1V	4.4V	0.65V	5.4V	2.15V	5.2V	6.0V	3.0V
	Base	-2.6V	0.57V	0.40V	0.65V	0.23V	2.5V	3.2V	0.2V
	Emitter	-2.12V	0.55V	0.25V	0.47V	0.1V	2.0V	3.0V	0V
COLLECTOR CURRENTS		400μA	400μA	800μA	730μA	600μA	2.5mA	6mA	6mA