PHILIPS RADIOPLAYER

MODEL 134

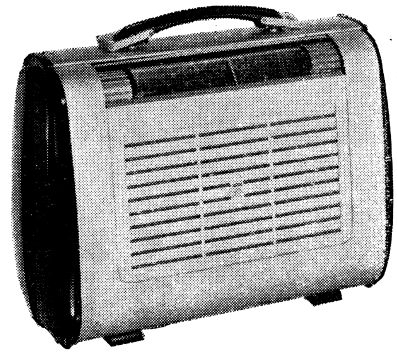

SPECIFICATIONS

(Subject to alteration without notice)

Tuning Range	530-1620 kc/s.
Intermediate Frequency	455 kc/s.
Battery Equipment	1 x 1.5V Portable type 2 x 45V Portable type
Battery Consumption	"A"—0.3A "B"—14 mA

VALVE EQUIPMENT AND VOLTAGE ANALYSIS

Valve Function	Valve No.	Valve Type	Plate Volts	Screen Volts
R.F. Amplifier	V1	1T4	85	31
Frequency Converter	V2	1R5	85	35
I.F. Amplifier	V3	1T4	85	31
Demodulator, A.V.C. and 1st Audio	V4	1S5	30*	23*
Power Amplifier	V5	3V4	82	85
Voltage across R16, –0.3V; across R15 and R16, –5.2V				

NOTE: These voltages are measured with an 1,000 ohms per volt meter, except those for V4 which are measured with a *V.T.V.M. They may vary ± 10% from the quoted figures. Measurements are made between the socket points indicated and chassis. The receiver should be in a "no signal" condition.

TO REMOVE CHASSIS FROM CASE.

Close the shutter, open the rear cover of the case (the fastening screws are captive and the holes in the cover are slotted) and remove the batteries. Unsolder the two connections from the chassis to the aerial loop on the tuning control side. Disengage the on/off switch actuating arm from the shutter.

Lay the receiver face downwards on some protective material and from outside the case, remove the two top securing screws. Remove the two securing screws and nut plates at the bottom of the chassis. The chassis may now be lifted out of the case, but care should be exercised to see that the chassis does not foul the loop connecting wires.

Refitting the chassis to the case is a reversal of the removal procedure. Care should be taken to see that the on/off switch actuating arm is engaged with the shutter before any mounting screws are put into position. The top mounting holes are slotted to allow the chassis to be adjusted to bring the control rollers into correct fitting in the dial cut-out. The screws at the bottom of the chassis should be tightened last.

DIAL CALIBRATION ADJUSTMENT.

If dial calibrations are incorrect by an equal amount of error over the band, the condition may be corrected by moving the cursor on the dial driving cord. This may be done from the rear of the receiver by engaging a suitably shaped implement in the hole provided in the rear portion of the cursor. During this operation the dial drum should be held firm to prevent the cord from moving.

REPLACEMENT OF CARRYING HANDLE.

To replace the carrying handle it is necessary to dismantle the end links. In the rear side of each link are two screws, removal of the top screw in each case permits of sufficient dismantling to allow the handle to be replaced.

ALIGNMENT.

It is possible to carry out complete alignment without removal of the chassis from the cabinet.

The cores for the secondaries of the I.F. transformers are located in the top of the cans, those for the primaries are in the bottom of the cans. Access holes for the primary cores are provided in the chassis shielding cover, which should be in place during alignment.

R.F. alignment should be done with the batteries fitted. The trimmer layout is shown as an inset to the circuit diagram. Apply the signal generator between the external aerial and earth sockets. Before commencing alignment, set the dial cursor, with the tuning gang fully closed, to the left-hand edge of the left-hand line which separates the state designations from the station characters. Alignment frequencies are 600 kc/s (ZL characters), adjust oscillator coil core; and 1,420 kc/s (XY characters), adjust oscillator and R.F. capacitive trimmers. Adjustment of the loop trimmer at 1,420 kc/s should only be made with the back of the case closed. **No attempt should be made to adjust the core of the R.F. coil.**

Continued on Page Three.

Published by Philips Electrical Industries of Australia Pty. Limited
Sydney - Melbourne - Brisbane - Adelaide - Perth
February, 1952.

PARTS LISTS

CAPACITORS

No.	Description	Code No.
C1, 2, 3	3 gang tuning	CZ.108.204
C4	50 pF compr. trimmer	
C5	500 pF mica	
C6	0.1 mF 200V paper	
C7, 19, 20, 21	0.01 mF 600V paper	
C8, 11	30 pF air trimmer	CZ.113.700
C9, 10	Part of 1st I.F. transformer	
C12	20 pF mica	
C13	560 pF mica 2%	CZ.066.122
C14	0.001 mF mica	
C15, 16	Part of 2nd I.F. transformer	
C17	100 pF mica	
C18	0.001 mF 600V paper	
C22	24 mF 350V electrolytic	
C23	0.5 mF 200V paper	

RESISTORS

No.	Description	Code No.
R1, 10, 12	0.5 megohm ½W carbon	
R2, 7	100,000 ohms ½W carbon	
R3, 5	50,000 ohms ½W carbon	
R4	20,000 ohms ½W carbon	
R6, 9	3 megohms ½W carbon	
R8	1 megohm carbon potentiometer	CZ.029.305
R11	10 megohms 1W carbon	
R13	150 ohms ½W carbon	
R14, 16	25 ohms 1W carbon	
R15	400 ohms 1W carbon	

COILS

No.	Ohms	Description	Code No.
L1	1.3	Aerial Loop	CZ.333.004
L2	1.25	Aerial Loop	CZ.333.005
L3	<0.5		
L4	11	R.F. Coil (1 red and 1 blue spots)	CZ.323.228
L5	2.5		
L6	12	I.F. Transformer	CZ.320.423
L7	12		
L8	3	Oscillator Coil (1 blue spot)	CZ.330.602
L9	1		
L10	12	I.F. Transformer	CZ.320.424
L11	12		
L12	480	Output Transformer	CZ.345.010
L13	<0.5		
L14	3.6	Speaker	CZ.161.119

Continued from Page One.

REPLACEMENT OF TUNING SPINDLE AND/OR ROLLER AND/OR DIAL SUPPORT MOULDING.

This operation is most conveniently performed by first removing the tripod chassis supporting bracket. This involves the unstringing of the dial cord and the unsoldering of volume control potentiometer and on/off switch connecting leads.

Working with the tripod bracket on the bench, remove the tuning spindle retaining clip, which is located on the end remote from the cord driving bush. Remove the drive mounting bracket (2 screws) and take out the roller and tuning spindle. The roller is a friction fit to the spindle and can be removed from it with a firm pull.

At this stage, the right-hand dial support moulding may be readily removed.

When replacing the roller, it may be necessary to make a few trial positions on the spindle to enable the retaining clip to engage in the spindle grooves to ensure that the roller does not rub on the bracket or dial support moulding.

REPLACEMENT OF VOLUME CONTROL ROLLER AND/OR POTENTIOMETER AND/OR SUPPORT MOULDING.

These operations can be performed without recourse to the preliminary removal of the tripod mounting bracket.

Remove the retaining clip and spring for the on/off switch actuating arm and remove the on/off switch. Unscrew the potentiometer mounting plate and withdraw the plate, potentiometer and roller. The roller is a friction fit on the spindle and can be removed with a firm pull.

The left-hand dial support moulding may now be removed by undoing its two mounting screws.

When replacing the potentiometer, mount it with its lugs facing toward the chassis and the cold one nearest to the on/off switch. Bear in mind that the potentiometer is of reverse taper.

It will be noticed that the potentiometer spindle enters a hole in the dial support moulding and care should be exercised when securing the mounting plate to see that the spindle rotates freely in this hole. The roller should be positioned on the spindle so that it does not rub on either the mounting plate or dial support moulding.

IMPORTANT ! In ordering spare parts, quote CODE NUMBER of part and MODEL NUMBER of Receiver. In claiming free replacement under GUARANTEE, return defective part PROMPTLY and quote MODEL and SERIAL NUMBER of Receiver and DATE OF PURCHASE.

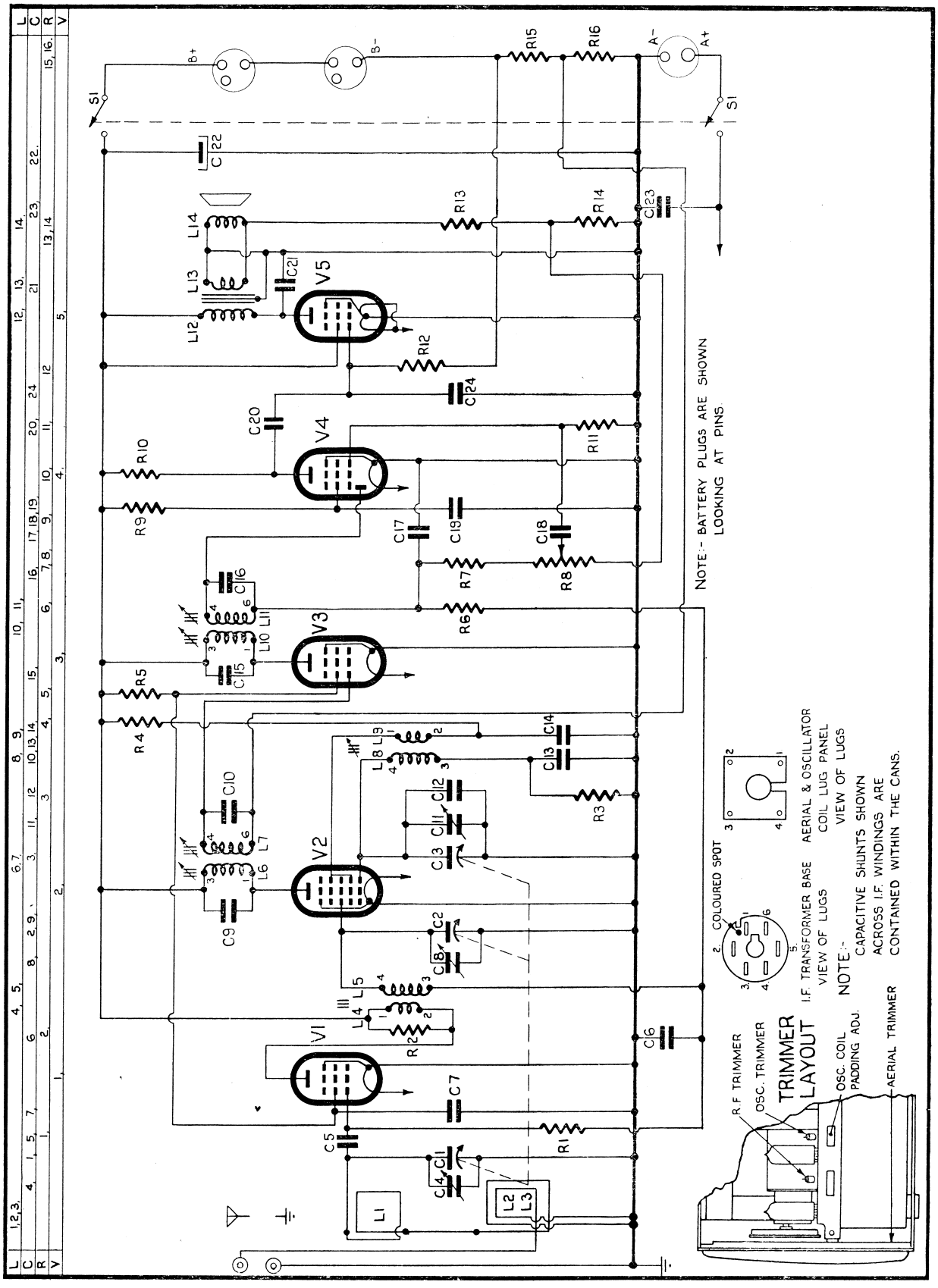
B+
B-
A-
A+
S1
R15
R16
C22
C23
R13
R14
L14
L13
L12
C21
V5
R12
C24
C20
V4
R10
R11
R9
C17
C19
C18
R7
R8
R6
C16
L11
L10
C15
V3
R5
R4
C14
C13
R3
L9
L8
C12
C11
C3
C10
L7
L6
C9
V2
C2
C8
L5
L4
R2
V1
C6
C7
C5
R1
C4
L1
L2
L3
NOTE:- BATTERY PLUGS ARE SHOWN LOOKING AT PINS.
COLOURED SPOT
I.F. TRANSFORMER BASE VIEW OF LUGS
AERIAL & OSCILLATOR COIL LUG PANEL VIEW OF LUGS
NOTE:- CAPACITIVE SHUNTS SHOWN ACROSS I.F. WINDINGS ARE CONTAINED WITHIN THE CANS.
TRIMMER LAYOUT
R.F. TRIMMER
OSC. TRIMMER
OSC. COIL PADDING ADJ.
AERIAL TRIMMER

MISCELLANEOUS COMPONENTS

No. on Dial Parts Diagram	Description	Code No.
—	Assembly, carrying handle	CR.523.404
—	Assembly, case end	CR.248.007
9	Assembly, cursor	CR.480.643
—	Assembly, drive bracket	CR.262.422
—	Assembly, front cover	CR.572.068
—	Assembly, rear cover	CR.572.071
—	Assembly, plate mtg. bracket	CR.265.403
—	Assembly, pot. mtg. bracket	CR.280.609
—	Assembly, shutter	CR.572.231
—	Assembly, switch arm	CR.526.002
4	Assembly, tuning spindle	CR.371.216
—	Badge, Philips	CS.436.416
—	Block. battery locating	CS.468.206
—	Bracket. battery locating	CS.229.614
—	Bracket, chassis support	CS.232.027
—	Clamp, speaker (repair type)	49.976.52
—	Clip, battery cable tube	CS.282.425
—	Clip, capacitor mounting	CH.777.374
—	Clip, coil can mounting	CS.235.833
—	Clip, tuning control roller	CH.777.371
—	Clip, volume control roller	CH.777.370
—	Cloth, grille	CS.420.012
7	Cord, dial drive	CS.361.832
—	Cursor	CS.410.622
1	Drum, dial	CS.360.008
—	End, case	CS.217.014
—	Foot, mounting (front)	CS.240.022
—	Foot, mounting (rear)	CS.240.020
—	Grommet, blind (trimmer access hole)	CS.422.461
—	Link, carrying handle	CS.365.240
—	Nut, rear foot mounting	CH.629.201

No. on Dial Parts Diagram	Description	Code No.
—	Nut, rivet (rear cover fastening)	CS.272.208
—	Pad, felt (mounting feet)	CS.424.016
—	Plate, nut (chassis mounting)	CS.271.026
—	Plug, ext. aer. and earth	CH.776.100
—	Plug, 2 pin polarised	CR.102.200
—	Plug, 3 pin	CZ.365.204
5	Pulley, brass	CS.360.205
6	Pulley, plastic	CS.359.602
—	Ring, C (tuning spindle)	CS.281.802
—	Ring, C (sw. arm to spindle)	CS.281.801
3	Ring, dial cord	CS.281.807
—	Roller, tuning control	CS.381.405
—	Roller, volume control	CS.381.406
—	Scale, dial	CS.412.331
—	Screw, ch. supp. bracket to case	CS.258.835
—	Screw, C/sunk (front cover fixing)	CS.259.818
—	Screw, drive (carrying handle)	CH.525.065
—	Screw, rear cover fastening	CS.258.834
—	Screw, shutter spring anchoring	CS.250.010
—	Slider, cursor	CS.382.217
—	Spacer, link (carrying handle)	CS.213.901
—	Socket, valve (7 pin min.)	CZ.369.318
2	Spring, dial drum	CS.210.029
—	Spring, carrying handle	CS.104.010
—	Spring, shutter	CS.210.024
—	Spring, switch arm	CS.211.022
—	Strip, rear cover fastening	CS.110.738
—	Support, dial, L.H.	CS.217.204
—	Support, dial R.H.	CS.217.203
—	Switch, on/off	28.650.25
—	Tube, battery cable stowage	CS.467.415
—	Washer, felt (speaker mtg.)	CS.424.018
—	Window, dial	CS.030.008

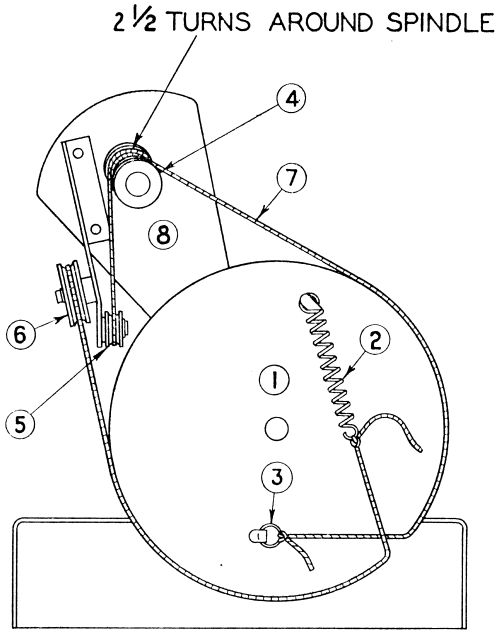

DIAL CORD LAYOUT