SANYO

10-TRANSISTOR
AUTOMATIC TUNING PORTABLE RADIO

MODEL 10C-320

SERVICE MANUAL

SANYO ELECTRIC CO., LTD.

INTERNATIONAL DIVISION: SANYO ELECTRIC TRADING CO., LTD.
OSAKA, JAPAN

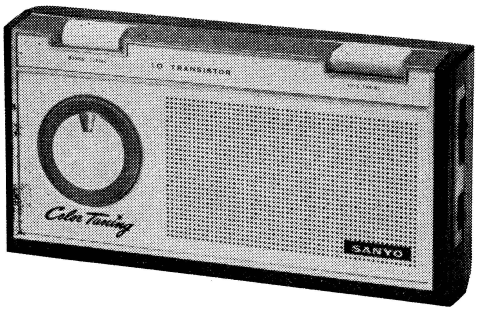

SPECIFICATIONS

FREQUENCY RANGE		540 – 1600 KC
INTERMEDIATE FREQUENCY		455 KC
TRANSISTOR	2SA203	Frequency converter
	2SA202×2	IF amplifier
	2SB185	1st amplifier
	2SB186	2nd amplifier
	2SB187×2	Power amplifier
	2SB187	1st DC. amplifier
	2SB187	2nd DC. amplifier
	2SA203	Trigger amplifier
DIODE	1S188	A.G.C
	1S188	Detector & A.G.C.
	1S188	Trigger detector
THERMISTOR	SDT-20	Temperature compensator

RADIATION SENSITIVITY ..... 10mW output 130 μV/m (upper limit)
DISTORTION ... 50mW output at 5 mV/m input 7% (upper limit)
LOUDSPEAKER ..... 3½″ permanent dynamic speaker
Voice coil impedance 7 ohms
OUTPUT POWER ..... Undistorted 300 mW
Maximum 400 mW
BATTERY ..... 6 volt 4 penlight batteries
CURRENT DRAIN ..... No signal 13 mA
Maximum 155 mA
DIMENSIONS ..... 8¼″ wide×4¼″ high×1¼″ thick
(209×107×32mm)
WEIGHT ..... 2.1 lbs (952gr.)

ALIGNMENT PROCEDURES

IF and broadcast RF alignment

Apply volt-meter across the voice coil. Volume control should be at maximum position. Output of signal generator should be no higher than necessary to obtain output reading in order to avoid AGC function.

STEP	SIGNAL GENERATOR COUPLING	SIGNAL GENERATOR FREQUENCY	RADIO DIAL SETTING	ADJUST FOR MAXIMUM OUTPUT
IF ALIGNMENT				
1	Radiate signal through the loop antenna, which connected with signal generator output cable.	455 Kc/s	lower end	IFT-3 IFT-2 IFT-1
BROADCAST RF ALIGNMEMT				
2	Radiate signal through the loop antenna, which connected with signal generator output cable.	520 Kc/s	lower end	L2
3		1650 Kc/s	upper end	Ct-2 osc. trim.
4		Repeat steps 2 and 3.		
5		600 Kc/s	600 Kc/s	L1
6		1400 Kc/s	1400 Kc/s	Ct-1 Ant. trim.
7		Repeat steps 5 and 6.		

TRIGGER CIRCUIT ALIGNMENT

1. Place a radio set under loop antenna with 30cm spacing. Connect a volt-meter across the voice coil.
2. Set its volume control in maximum response and locae the dial disc by rotating the manual tuning knob so that can be seen thru opening the middle point between marking letters of 54.
3. Radiate signal (400 c/s modulated 455 Kc) from loop antenna which is connected with an RF signal generator.
4. Adjust the signal strength of signal generator output to be around 92db (2000 μV/m) and arrange the generator signal to obtain 5mV output reading across the voice coil.
5. In order to make automatic tuning circuit into operation, push the automatic tuning button. (But the mechanical energy of wound-up spring should be fully discharged before this step. If not the dial (ie. tuning gang) will rotate and disturb the pre-arranged condition for alignmeut)
6. Adjust IFT (T-4 and T-5) so as to get the highest output reading.

PARTS LIST

STOCK NO.	DESCRIPTION	Q'ty
PACKAGE		
R-475323	Instrcution book	1
R-485070	Leather case	1
R-485071	Earphone case	1
CABINET		
R-315116	Cabinet	1
R-315117	Back cover	1
R-315118	Battery cover	1
R-285022	Frame panel	1
R-265339	Speaker grille	1
R-265341	VR. plate	1
R-265342	Name plate	1
R-265343	Badge	1
R-315119	Dial cover	1
R-	Net (For back cover)	1
R-265407	Dial finish metal	1
R-	Speaker grille sheet	1
R-115236	Speaker retaining clip	1
R-S85139	Winding lever	1
R-265340	Automatic & manual tuning plate	1
CHASSIS		
R-115240	Chassis	1
R-415136	Printed circuit board	1
R-S5607	Mechanism (Complete)	1
R-235089	Toothed wheel	1
R 375007	〃	1
R-375008	Connection pin	3
R-155028	Coil spring	3
R-325137	Pelay cover	1
R-S85136	Battery case	1
R-355086	Battery case	1
R-235087	Battery terminal	2
R-S85137	〃	2
R-235088	〃	2
R-255084	Coil spring (ANT.)	2
R-265345	Aluminum bracket	1
R-265346	〃	1
R-155029	Coil spring (For auto TU. SW)	1
R-115242	Fix metal (Micro SW.)	1
R-S85138	Manual to knob (Complite)	1
R-315120	Knob	1
R-245205	Shaft	1
R-375004	Fix board	1
R-375005	Toothed wheel	1
R-375006	〃	1
R-245207	〃	1
R-245206	Shaft	1
R-155027	Coil spring	2
R-245212	Shaft	1
R-325115	Automatic tuning button	1
R-325110	VR. knob	1
R-265403	Dial plate	1
R-365047	Color plate	1
R-365048	Back plate	1
R-265370	Shield cover	1
R-245129	Stud nut for shield cover	1
R 23439	Lug	1
R-44031	Cushion	4
R-445031	Tube (Ant coil)	2
R-44013	Cushion (For mechanism)	3
R-	Sheet	1
R-426177	DL. sheet	1
R-	Color plate sheet	1
R-	Cushion	1

SYMBOL NO.	STOCK NO.	DESCRIPTION	Q'ty
ELECTRICAL			
L1	R-W2566	ANT coil	1
	R-S6102	Speaker	1
	R-R11606b	Variable resistor	1
T6	R-W6533	Input trans.	1
T7	R-W6564	Output trans.	1
	R-C1515	Variable capacitor	1
L2	R-W8535	OSC coil	1
T1	R-W5T534	I. F trans.	1
T1, T2	R-W5T535	I. F trans.	2
T3, T5	R-W5T536	I. F trans.	2
	R-S5569	Relay	1
C14	R-C9086a	Electrolytic (120μF/6V)	1
C5, C13, C20	R-C9080	〃 (30μF/3V)	3
C12	R-C9078	〃 (5 μF/6V)	1
C19	R-C9196	〃 (0.5μF/10V)	1
	R-CXC-002	Packed capacitors & resistor	1
	R-S6536	Earphone	1
	R-M3502	Ceramic filter	1
	R-S2107	Earphone socket	1
	R-S4549	Auto-TU SW.	1
	R-S4512a	Slide SW.	1
	2SA203	Transistor A	2
	2SA202	〃 A	2
	2SB185	〃 AA	1
	2SB186	〃 A	2
	2SB187	〃 A	3
	1S188	Diode	3
	STD-20	Thermistor	1
CAPACITORS & RESISTORS			
R21	82 Kohms ±10% ¼W	Carbon film	1
R5, R11	62 Kohms 〃 〃	or carbon	2
R8	33 Kohms 〃 〃	composition	1
R1	18 Kohms 〃 〃	fixed resistors	1
R27	12 Kohms 〃 〃		1
R7	8.2 Kohms 〃 〃		1
R12	6.8 Kohms 〃 〃		1
R2, R9, R15, R22	4.7 Kohms 〃 〃		4
R14	3.9 Kohms 〃 〃		1
R25, R3	3.3 Kohms 〃 〃		2
R18	2.7 Kohms 〃 〃		1
R6	1.2 Kohms 〃 〃		1
R10, R16 R23, R24	1 Kohms 〃 〃		4
R13	560 ohms 〃 〃		1
R19, R26	100 ohms 〃 〃		2
R28	10 ohms 〃 〃		1
R20	4.7 ohms 〃 〃		1
R4	100 Kohms 〃 〃		1
R17	100 ohms ±20% 〃		1
R22	10 Kohms ±10% 〃		1
FIXED CAPACITOR			
C10	0.001 μF ±20% 50V	Mylar	1
C2	0.004 μF 〃 〃		1
C1, C21, C22	0.005 μF 〃 〃		3
C8, C16 C17, C18	0.02 μF 〃 〃		4
C11 C7	0.04 μF 〃 〃		2
C6 C9	10 pF ±10% 25V	Ceramic	2
C15	8 pF 〃 〃		1
C4	180 pF ±10% 25V	Styrol	1
C24	12 pF 〃 〃	Ceramic	1
C25	0.02 μF		

6-20093 Printed in Japan

MAIN PARTS CONNECTION

1. Antenna coil (L-1)

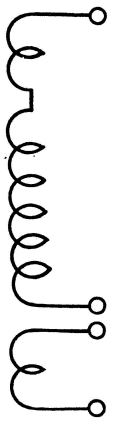

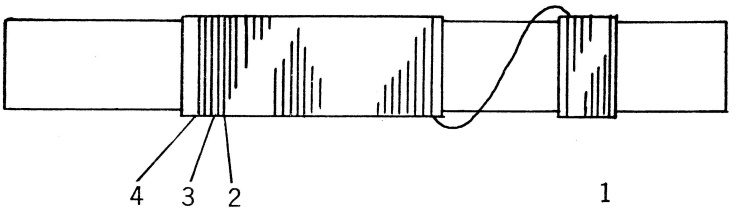

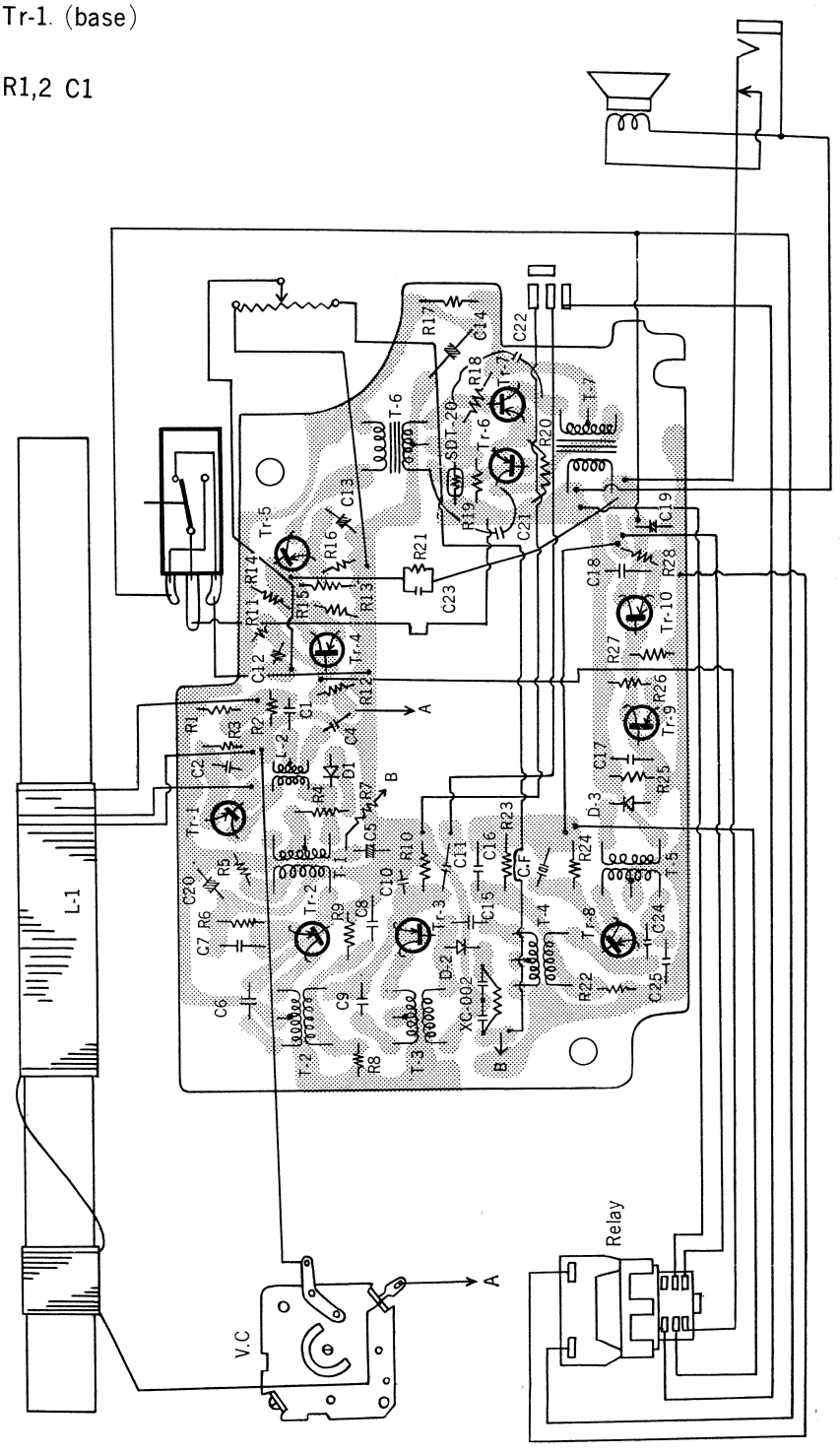
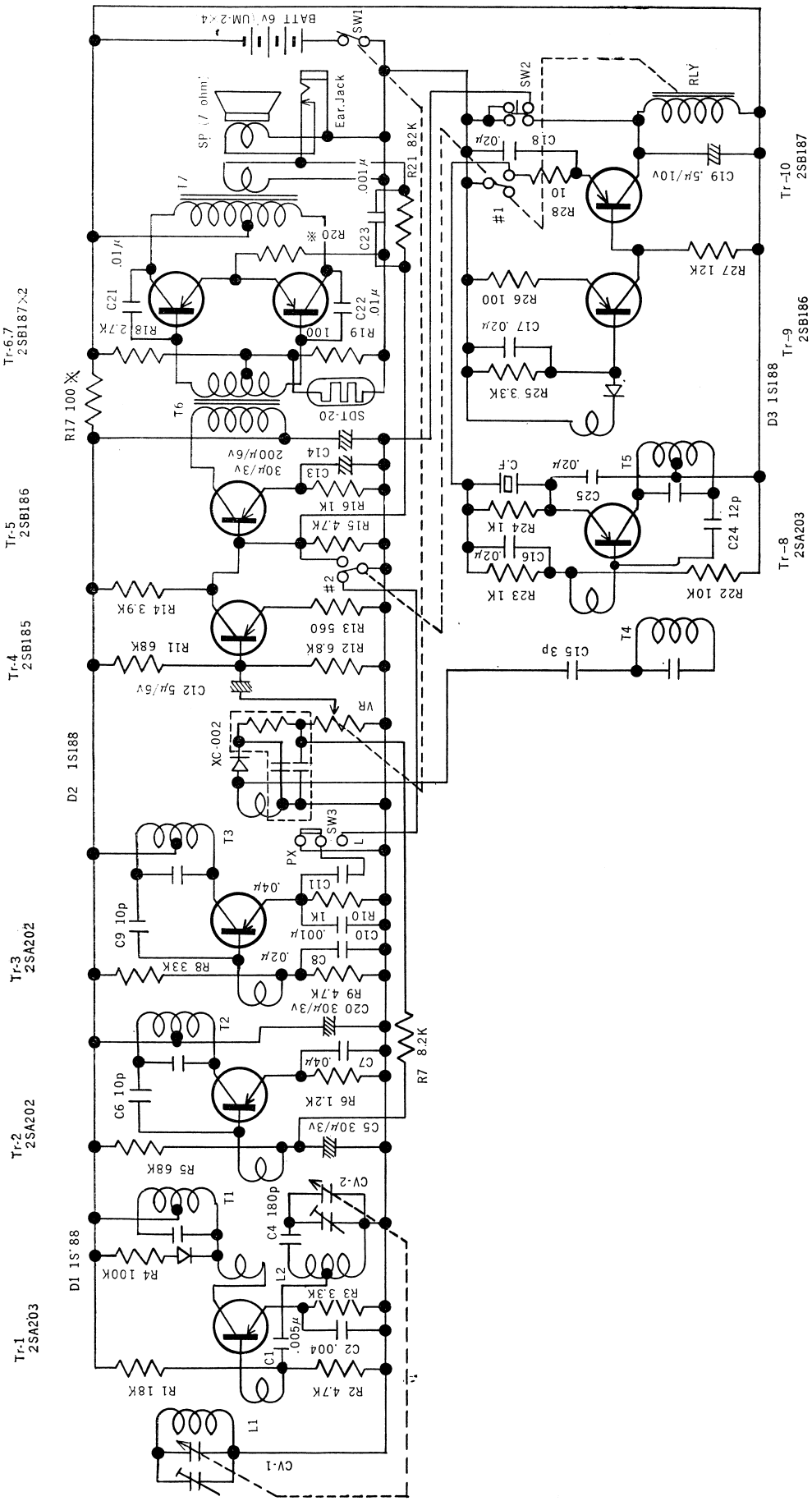
CIRCUIT DIAGRAM