Car Stereo cassette player 02 AC270A

Service
Service
Service

12 V

Service Manual

SPECIFICATIONS

NUMBER OF TRACKS	4-track 2 channels
TAPE CARTRIDGE	Stereo/Monaural compact cassette
TAPE SPEED	4.75 cm/sec. (1-7/8 i.p.s.)
FREQUENCY RESPONSE	125 to 6,300 Hz
CROSSTALK	40 dB or better between adjacent tracks
	25 dB or better between left and right channels
WOW & FLUTTER	0.3% or less (WRMS)
POWER OUTPUT	3.5 watts min. RMS (at T.H.D. = 10%) per channel
POWER INPUT	12-volt car battery, negative terminal to ground
Voltage	13.2 VDC
Current	Approx. 0.7 ampere (at 0.5 watt output)
SPEAKER IMPEDANCE	4 ohms per channel
IC's & DIODE	3 IC's and 1 diode
DIMENSIONS	150(W) x 50(H) x 148(D) mm (5-31/32", 1-31/32", 5-29/32")
WEIGHT	Player – 1.2 kg (2.65 lbs.)

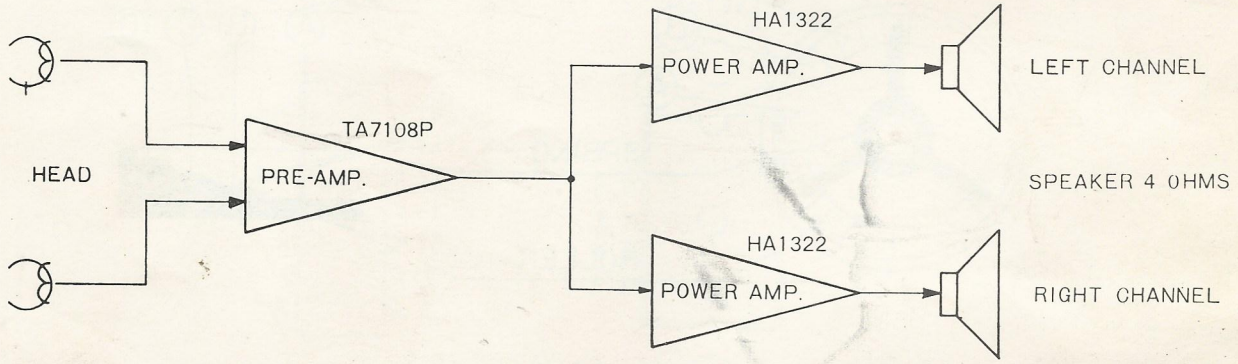

Subject to modification
4802 725 17004

PHILIPS

PLAYBACK HEAD ADJUSTMENT(Azimuth)

Normally the adjustment is precisely set at the factory and further adjustment should not be required unless the playback head or its mounting components are replaced. Incorrect adjustment will cause a reduction in performance. If the azimuth is moved, then carefully adjust the azimuth screw as shown in Fig. 9.

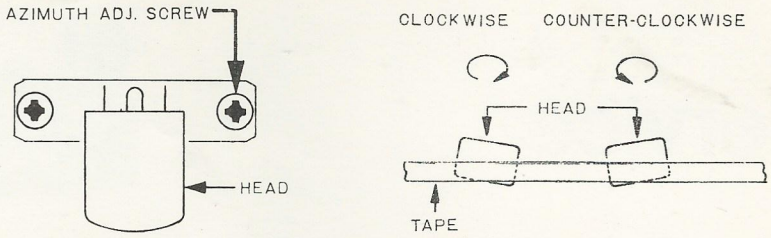

Fig. 9

Using a Test Tape for Azimuth Adjustment

Insert a test tape and set the control knobs as follows:

VOLUME CONTROL KNOB (VOL) . . . . . Normal Volume

BALANCE CONTROL KNOB (BAL) . . . . . In Centre Position

TONE CONTROL KNOB (TONE) . . . . . Turn Fully Clockwise

Carefully adjust the azimuth adjustment screw for maximum volume and treble tones. It is recommended that a VTVM or Circuit Tester is connected to the speaker terminals for obtaining the maximum value because the test tape for azimuth adjustment is recorded in high treble tones (6,300 Hz ordinary).

If a test tape is not available, use a stereo music tape with some high treble tones (piano or violin music) and follow the same procedure as above.

ADJUSTMENT FOR TAKE-UP TORQUE

Measure the take-up torque with the motor rotating. The value should be 50 g – cm. To adjust the torque, reset the spring to:

A or B to reduce the torque.

C or D to increase the torque. As per Fig. 10.

The adjustment is about 8 g – cm per step.

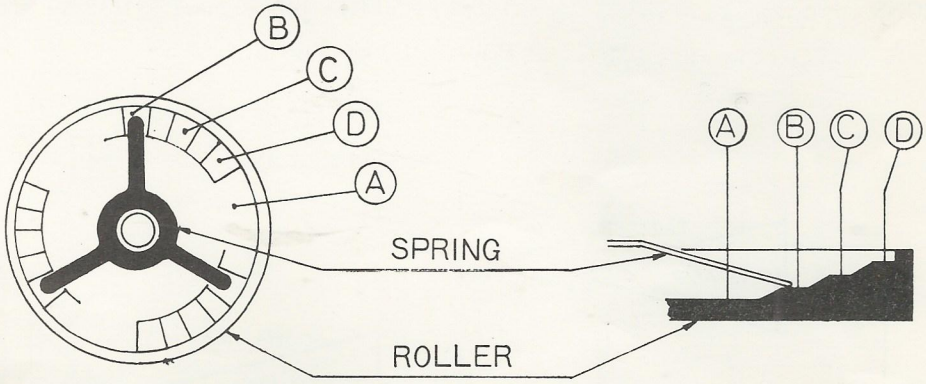

Fig. 10

PARTS LOCATION ON PC BOARD

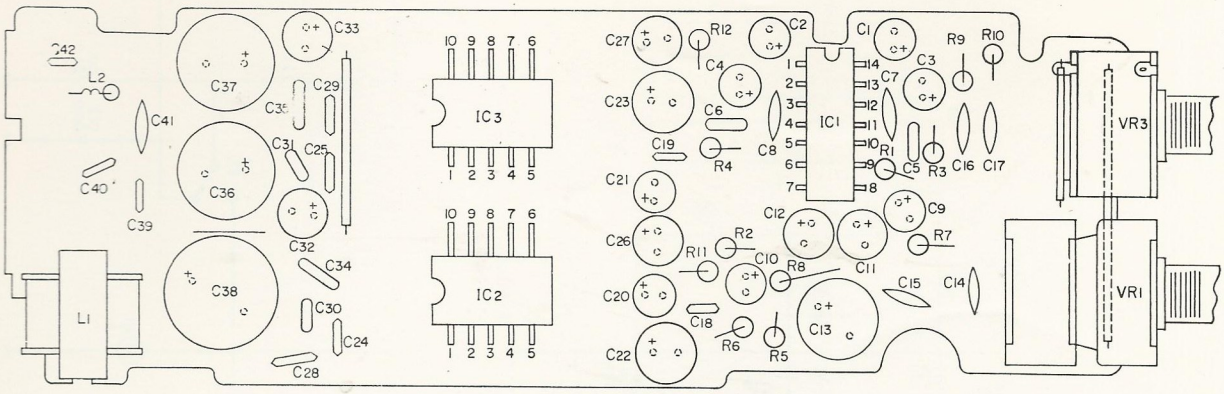

Fig. 2

CHECK POINTS ON PC BOARD

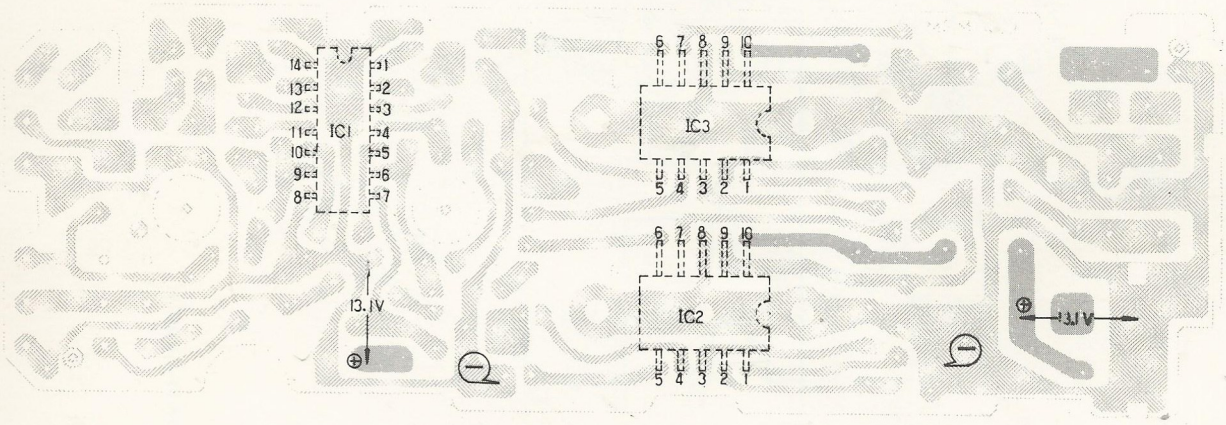

Fig. 3

I C \ Pin No.	1	2	3	4	5	6	7	8	9	10	11	12	13	14
I C 1	8.3V	2.0V	.6V	.02V	.7V	4.1V	9.2V	—	4.1V	.7V	.02V	.6V	2.0V	8.3V
I C 2, I C 3	1.2V	8.0V	1.5V	3.0V	3.9V	3.3V	12.4V	—	6.8V	13.1V	—	—	—	—

NOTES: 1. DC voltages measured with 25,000 ohm per volt meter, power supply set at +13.2 VDC, no signal input.
2. ⊕ denotes positive polarity of the meter,
3. All voltages measured with respect to chassis.

IC BASE CONNECTIONS

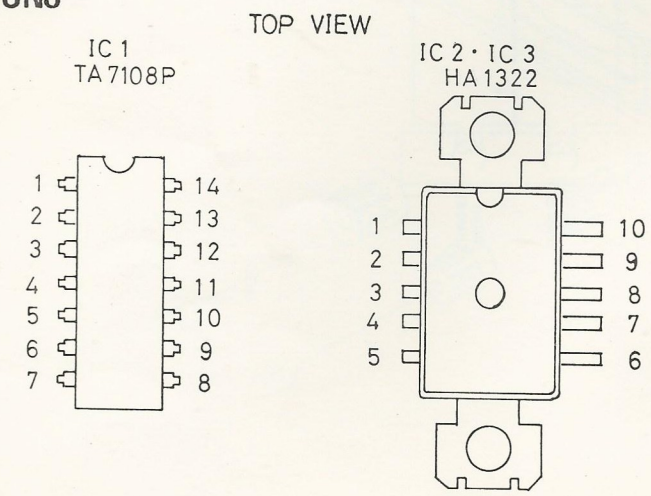

Fig. 4

SCHEMATIC

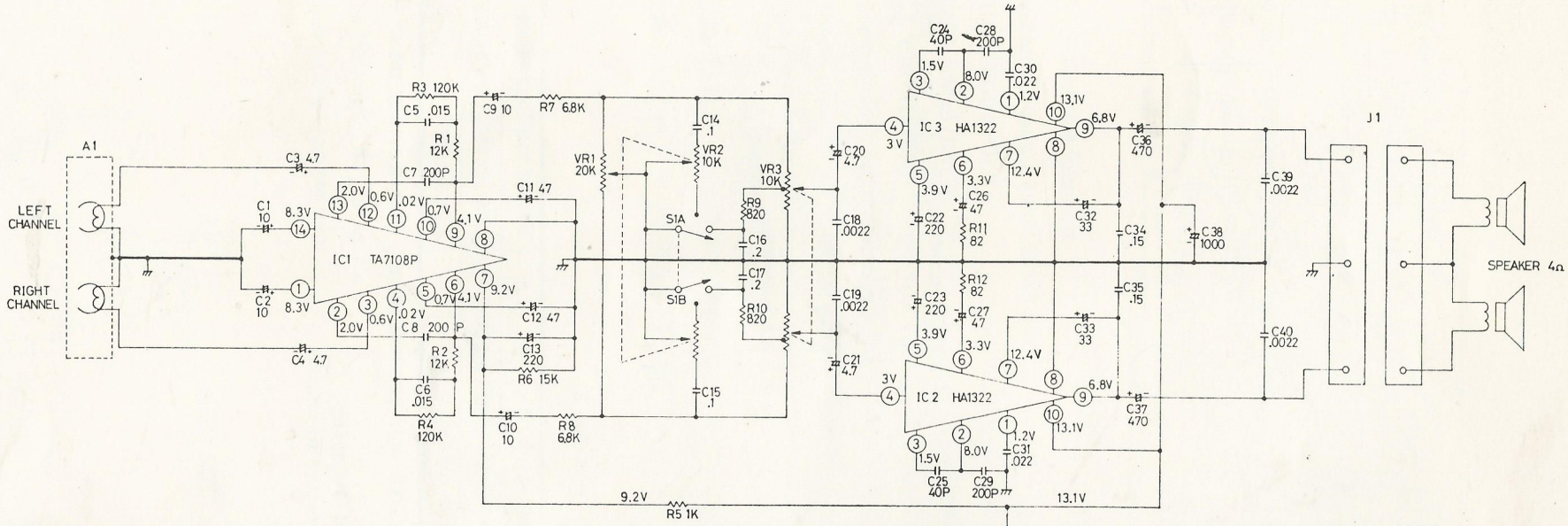

Fig. 5

NOTES:

1. All resistance in ohms, K=1,000.
2. All capacitance in μF, P=$\mu\mu$F.
3. DC voltages measured with 25,000 ohm per volt meter, power supply set at +13.2 VDC, no signal input.
4. All voltages measured with respect to chassis.

CASSETTE DECK EXPLODED VIEW

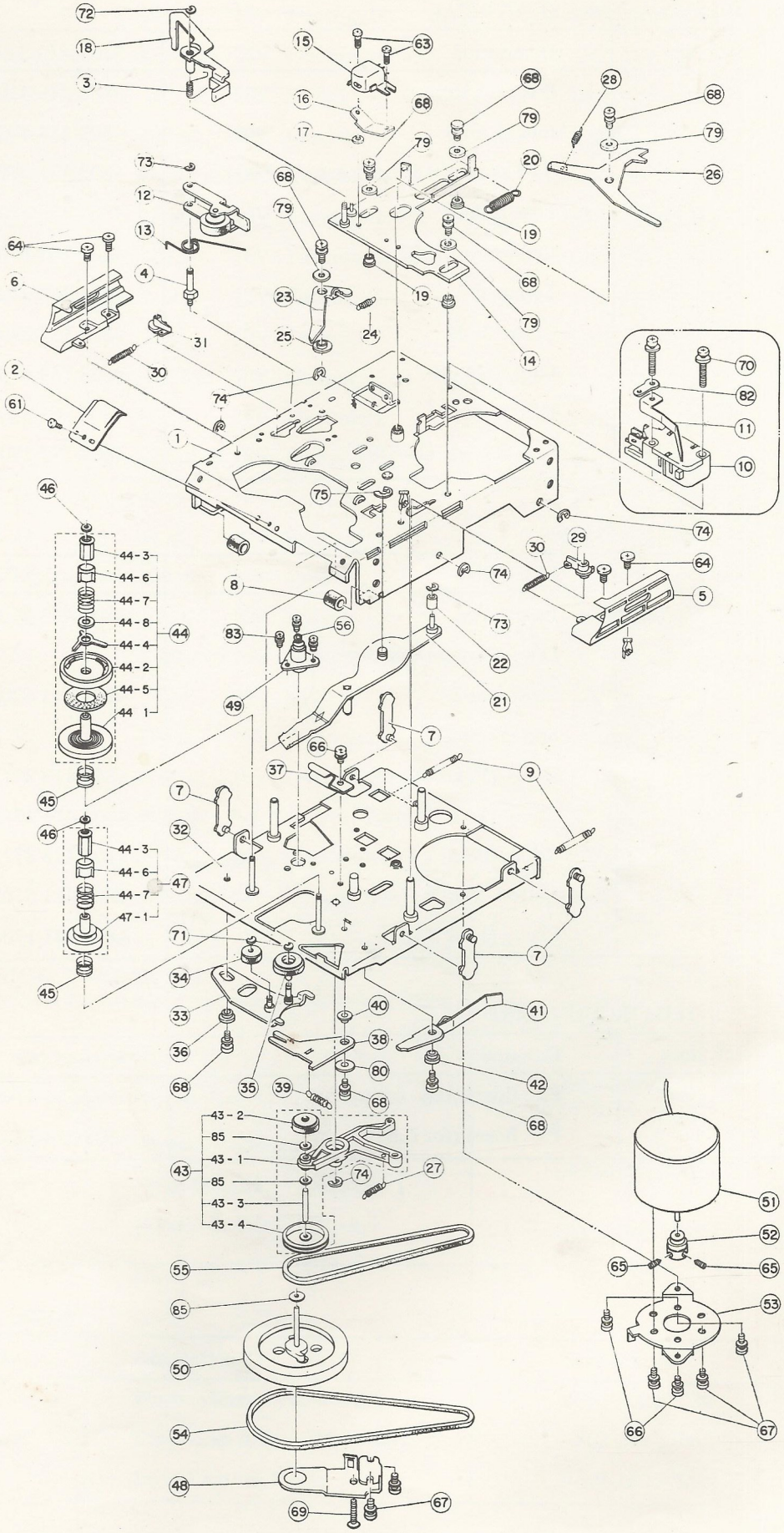

Fig. 8

REPLACEMENT PARTS LIST

CASSETTE DECK		
Ref. No.	Description	Service Code
2	Spring	4802 492 67208
3	Spring	4802 492 47017
9	Spring	4802 492 37198
10	Micro Switch	4802 271 37003
12	Pinchroller Assy.	4802 403 47016
13	Spring	4802 492 47018
16	Spring	4802 492 67209
20	Spring	4802 492 37199
24	Spring	4802 492 37201
27	Spring	4802 492 37202
39	Spring	4802 492 37203
44	Slip Mechanism	4802 528 27032
45	Spring	4802 492 57032
47	Slip Mechanism	4802 528 27033
50	Flywheel with Capstan	4802 528 67026
51	D.C. Motor	4802 361 27038
54	Belt	4802 358 37044
55	Belt	4802 358 37045
61	Screw 2 x 3 mm	4802 535 17005
66	Screw 2.6 x 4 mm	4822 502 11084
68	Screw 2.6 x 6 mm	4822 502 10034
71	Washer	4822 530 70119
72	Washer	4822 530 70121
73	Washer	4822 530 70122
75	Washer	4822 530 70123

MISCELLANEOUS PARTS		
Ref. No.	Description	Service Code
	Screw 3 x 4 mm	4822 502 11189
	Screw 3 x 6 mm	4822 502 11064
	Screw 2 x 4 mm	4822 502 11059
	Screw 2.6 x 6 mm	4822 502 10034

CAPACITORS

Ref. No.	Description	Service Code
C1. C2	10 µf 16V Electrolytic	4802 124 47044
C3. C4	4.7µf 25V Electrolytic	4802 124 47034
C5. C6	.015 µf 50V Mylar	4802 121 47161
C7. C8	200 pf 50V Ceramic	4802 122 47077
C9. C10	10 µf 16V Electrolytic	4802 124 47044
C11. C12	47 µf 10V Electrolytic	4802 124 47016
C13.	220 µf 16V Electrolytic	4802 124 47018
C14. C15	.1 µf 12V Ceramic	4802 122 47055
C16. C17	.2 µf 12V Ceramic	4802 122 47109
C18. C19	.0022 µf 50V Ceramic	4822 122 30114
C20. C21	4.7 µf 25V Electrolytic	4802 124 47034
C22. C23	220 µf 10V Electrolytic	4802 124 47006
C24. C25	40 pf 50V Ceramic	4822 122 31069
C26. C27	47 µf 10V Electrolytic	4802 124 47016
C28. C29	200 pf 50V Ceramic	4822 122 30094
C30. C31	.022 µf 50V Mylar	4802 121 47163
C32. C33	33 µf 10V Electrolytic	4802 124 47013
C34. C35	.15 µf 50V Mylar	4802 121 47173
C36. C37	470 µf 16V Electrolytic	4802 124 47024
C38.	1000 µf 16V Electrolytic	4802 124 47051
C39. C40	.0022 µf 50V Ceramic	4822 122 30114
C41	.01 µf 50V Ceramic	4822 122 30043
C42	.0022 µf 50V Ceramic	4822 122 30114

RESISTORS & CONTROLS
All Resistors are standard values and tolerances except where listed below.

Ref. No.	Description	Service Code
VR1. VR2	(Balance Control 20K ohm (Tone Control 10K ohm	4802 102 57006
VR3	Volume Control 10K ohm	4802 100 37012

IC's & DIODE

Ref. No.	Description	Service Code
IC1	Pre-amp linear – Monolithic	4802 209 87036
IC2. IC3	Power-amp linear – Monolithic	4802 209 87062
D1	Light Emitting Diode	4802 130 37095

MISCELLANEOUS ELECTRICAL		
Ref. No.	Description	Service Code
A1	Playback Head	4802 249 37007
F1	Fuse 3 Amp	4802 253 47006
J1	3.P Connector & Lead Assy. Speaker	4802 321 27113
J2	Fuse Holder	4802 256 47001
	Connector for J2	4802 268 17012
J3	Terminal	4802 268 27005
L1	Choke 3mH	4802 152 27028
L2	Choke .74 μH	4802 158 17077
M1	D.C. Motor	4802 361 27038
S1	Slide Switch. ON/OFF	4802 277 27038

CHASSIS & STYLING		
Ref. No.	Description	Service Code
1	Escutcheon	4802 459 57021
2	Door. Cassette Opening	4802 443 67042
3	Shaft (for 2)	
4	Spring (for 2)	
5	Knob. (Vol. Control)	4802 413 37134
6	Knob. (Tone Control)	4802 413 37135
7	Knob. (Balance Control)	4802 413 37136
8	Button. Stop & Eject	4802 411 57023
9	Clamp (J1.J2.J3)	4802 401 17088

PRINTED CIRCUIT BOARD		
Ref. No.	Description	Service Code
18	P.C. Board Assy. (complete)	4802 214 37004
19	P.C. Board (for L.E.D.)	4802 214 37005

WIRING ON PC BOARD

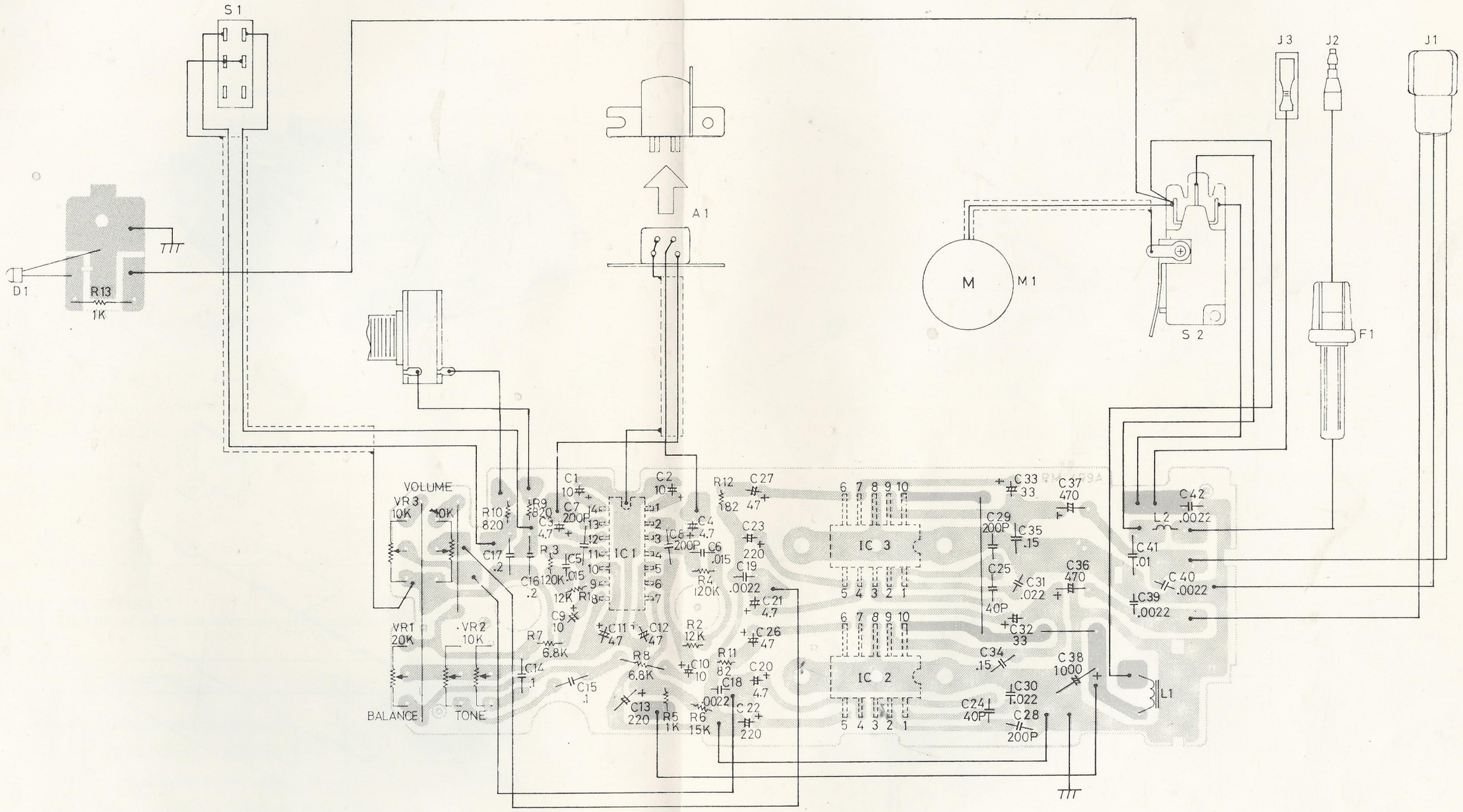

NOTES: 1. All resistance in ohms, K=1,000.

2. All capacitance in μF, P=$\mu\mu$F.

EXPLODED VIEW

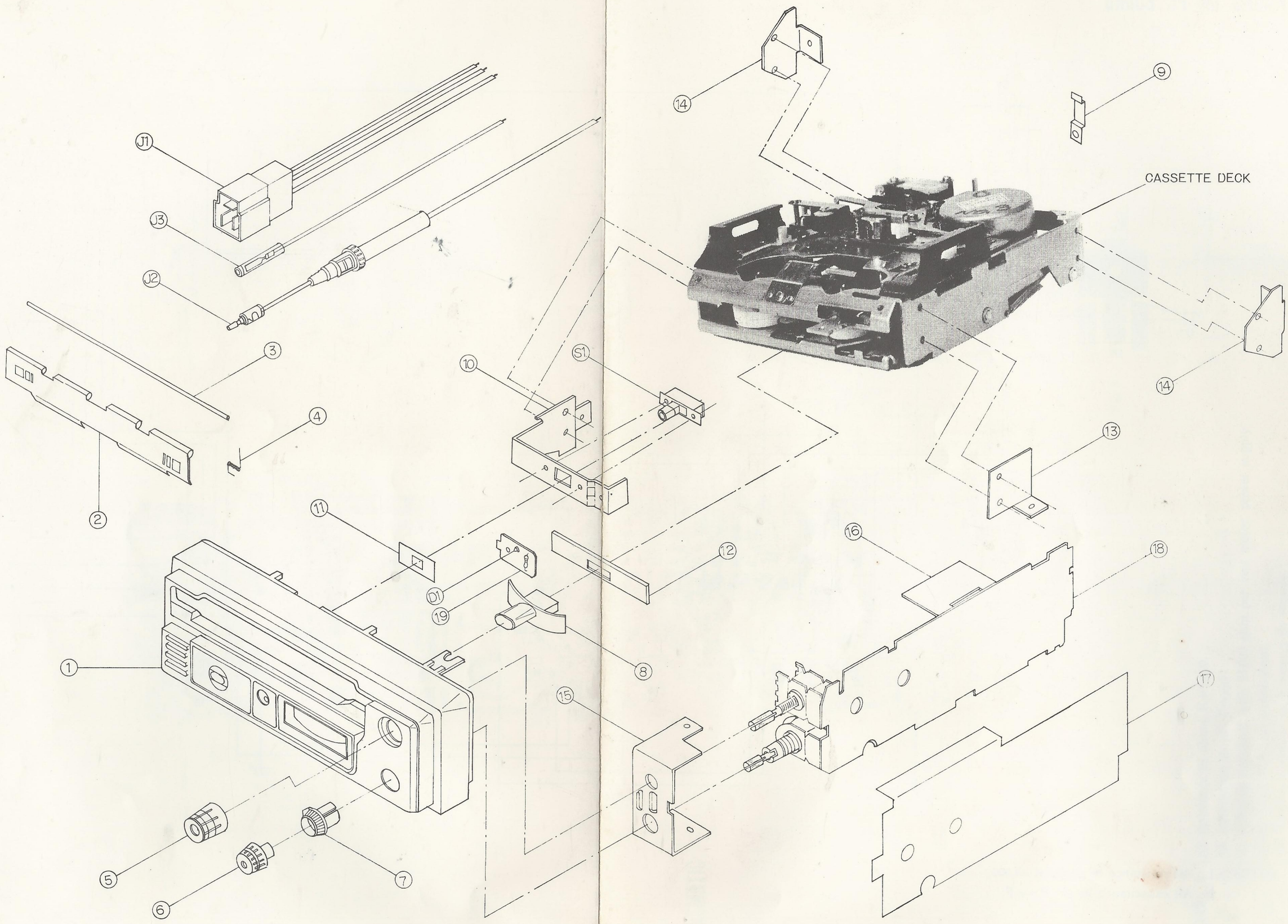

Fig. 7